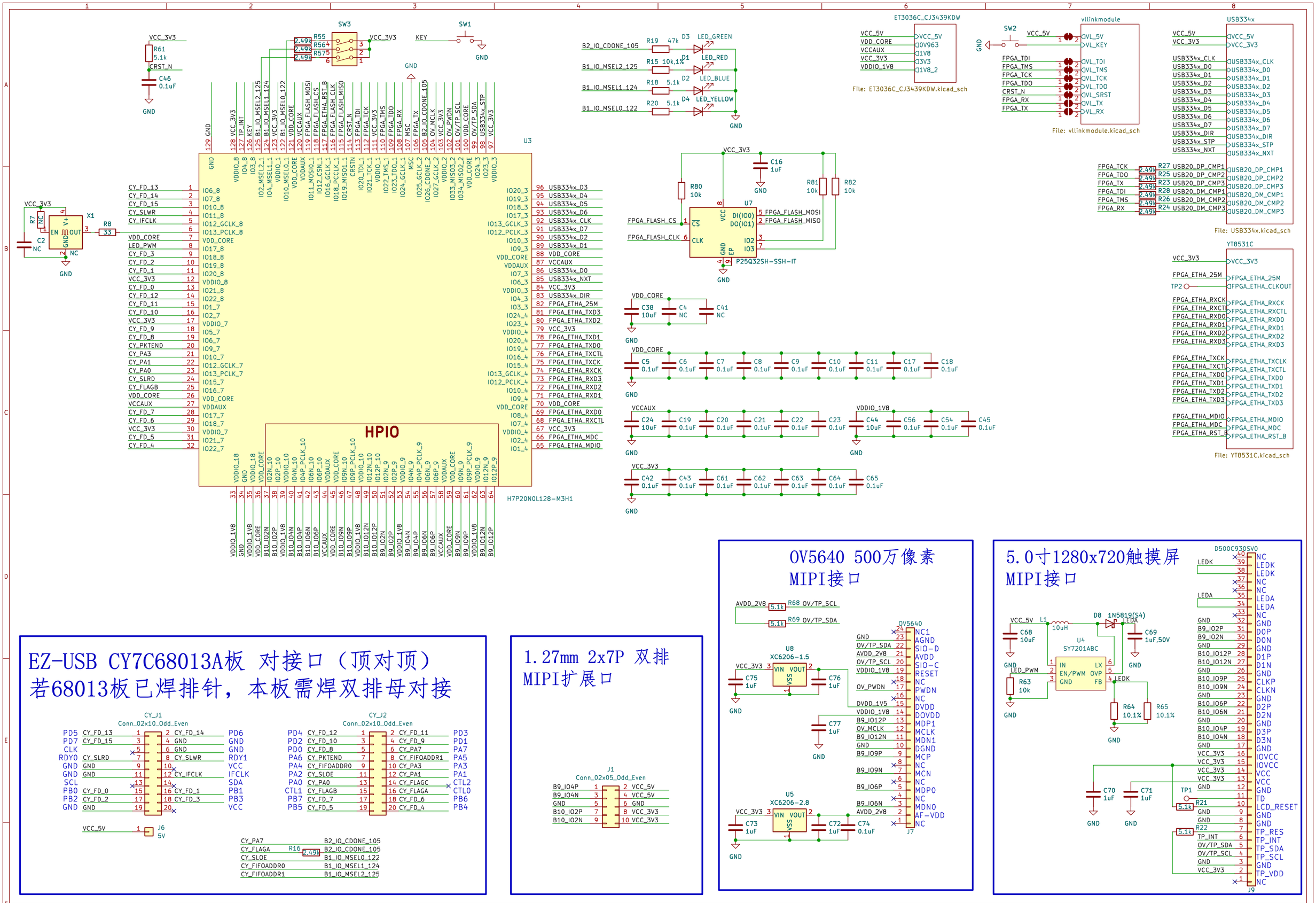
HPIO
H7P20N0L128-M3H1
U3
U7
P25Q32SH-SSH-IT
U8
XC6206-1.5
U5
XC6206-2.8
OV5640
J7
U4
SY7201ABC
D500C930SV0
J9
ET3036C_CJ3439KDW
File: ET3036C_CJ3439KDW.kicad_sch
vllinkmodule
File: vllinkmodule.kicad_sch
USB334x
File: USB334x.kicad_sch
YT8531C
File: YT8531C.kicad_sch
J1
Conn_02x05_Odd_Even
CY_J1
Conn_02x10_Odd_Even
CY_J2
Conn_02x10_Odd_Even
J6
5V
EZ-USB CY7C68013A板 对接口（顶对顶）
若68013板已焊排针，本板需焊双排母对接
1.27mm 2x7P 双排
MIPI扩展口
OV5640 500万像素
MIPI接口
5.0寸1280x720触摸屏
MIPI接口

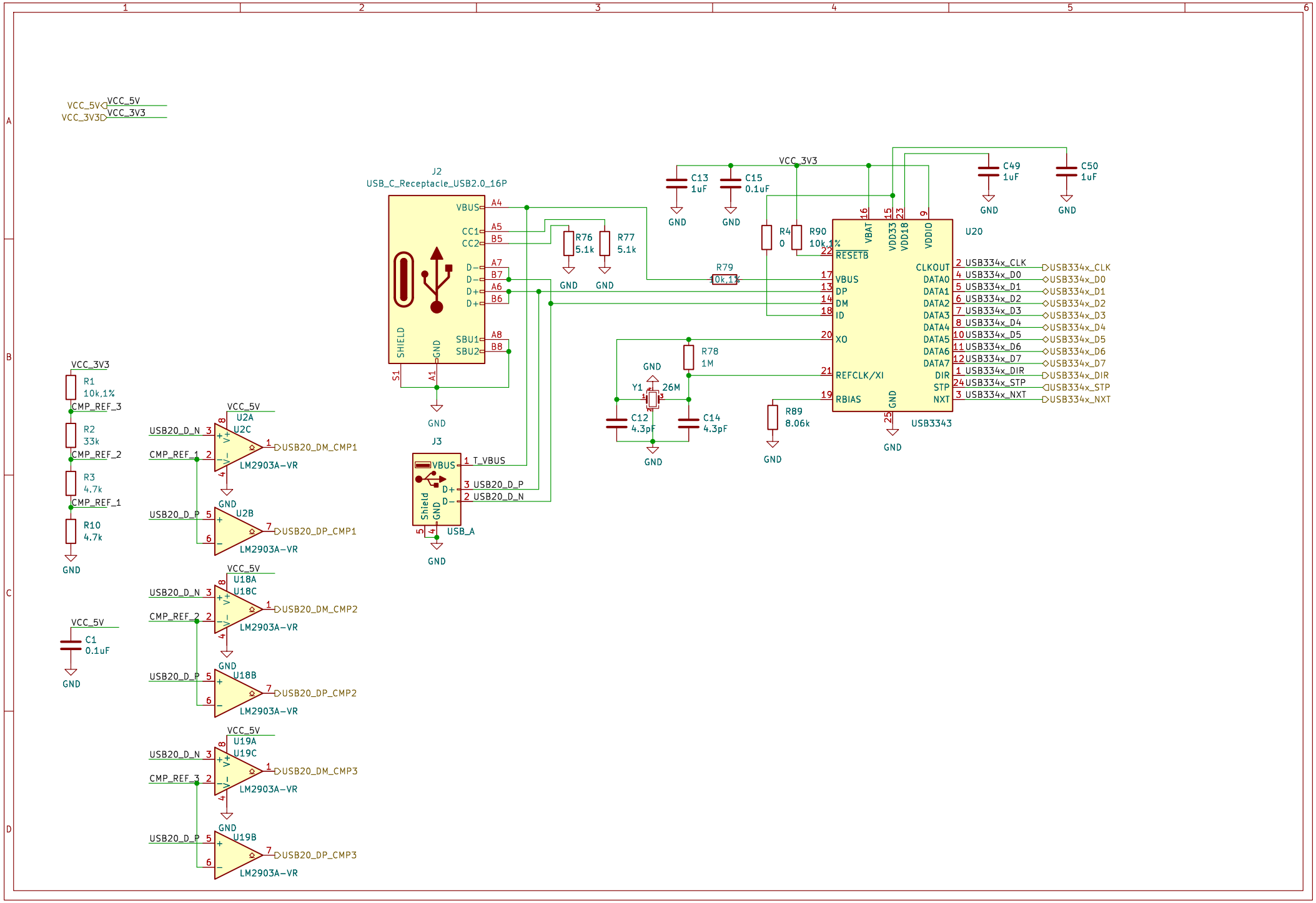
VCC_5V
VCC_3V3
J2
USB_C_Receptacle_USB2.0_16P
VBUS
CC1
CC2
D−
D−
D+
D+
SHIELD
GND
SBU1
SBU2
A4
A5
B5
A7
B7
A6
B6
A8
B8
S1
A1
R76
5.1k
R77
5.1k
C13
1uF
C15
0.1uF
C49
1uF
C50
1uF
R4
0
R90
10k,1%
R79
10k,1%
R78
1M
Y1
26M
C12
4.3pF
C14
4.3pF
R89
8.06k
U20
USB3343
RESETB
VBUS
DP
DM
ID
XO
REFCLK/XI
RBIAS
VBAT
VDD33
VDD18
VDDIO
CLKOUT
DATA0
DATA1
DATA2
DATA3
DATA4
DATA5
DATA6
DATA7
DIR
STP
NXT
USB334x_CLK
USB334x_D0
USB334x_D1
USB334x_D2
USB334x_D3
USB334x_D4
USB334x_D5
USB334x_D6
USB334x_D7
USB334x_DIR
USB334x_STP
USB334x_NXT
J3
VBUS
D+
D−
Shield
GND
T_VBUS
USB20_D_P
USB20_D_N
USB_A
R1
10k,1%
R2
33k
R3
4.7k
R10
4.7k
CMP_REF_3
CMP_REF_2
CMP_REF_1
C1
0.1uF
U2A
U2C
U2B
LM2903A-VR
USB20_D_N
USB20_D_P
USB20_DM_CMP1
USB20_DP_CMP1
U18A
U18C
U18B
USB20_DM_CMP2
USB20_DP_CMP2
U19A
U19C
U19B
USB20_DM_CMP3
USB20_DP_CMP3

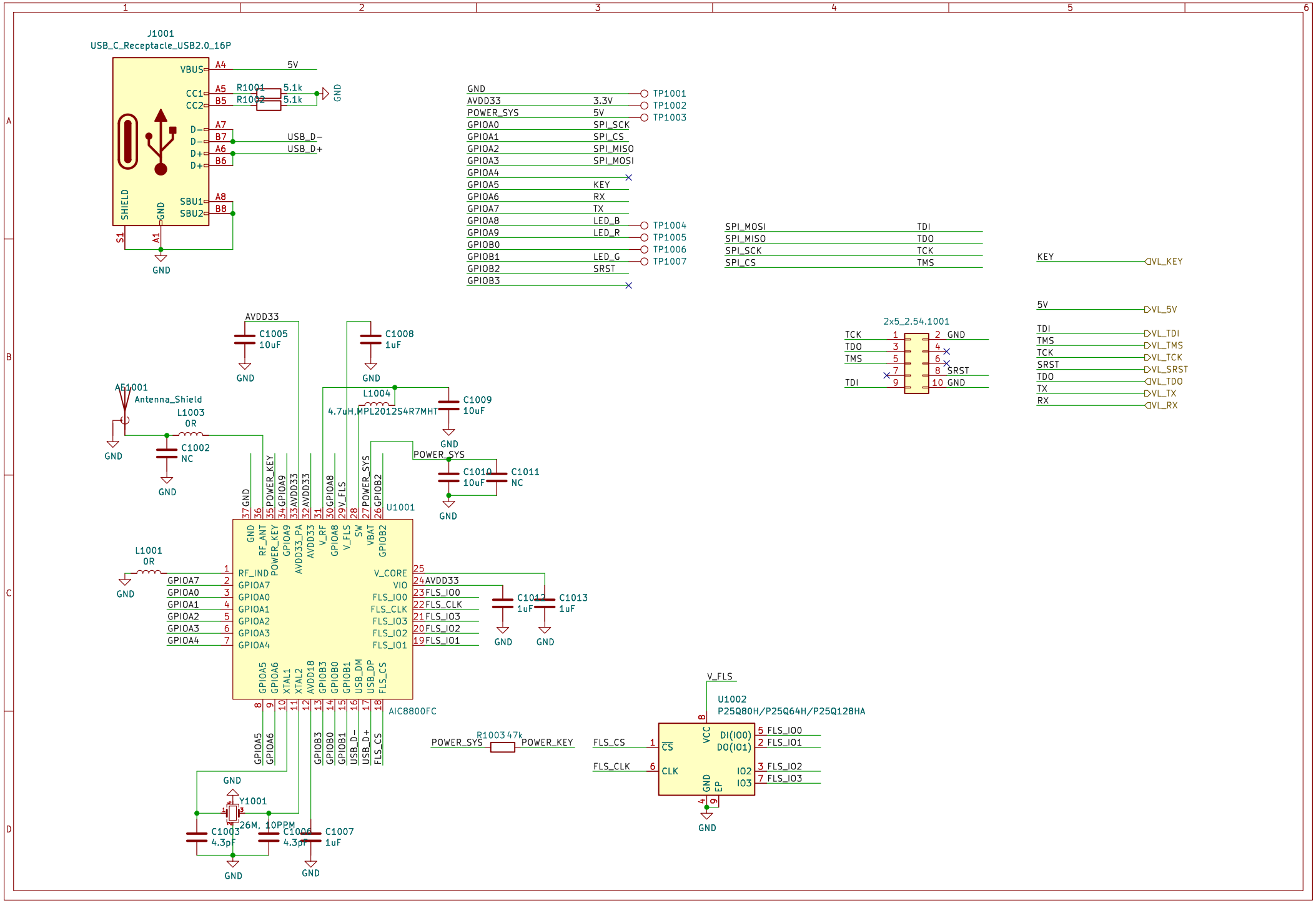
J1001
USB_C_Receptacle_USB2.0_16P
VBUS
CC1
CC2
D−
D+
SHIELD
GND
SBU1
SBU2
A4
A5
B5
A7
B7
A6
B6
A8
B8
S1
A1
5V
R1001 5.1k
R1002 5.1k
USB_D−
USB_D+
GND
TP1001
TP1002
TP1003
TP1004
TP1005
TP1006
TP1007
AVDD33 3.3V
POWER_SYS 5V
GPIOA0 SPI_SCK
GPIOA1 SPI_CS
GPIOA2 SPI_MISO
GPIOA3 SPI_MOSI
GPIOA5 KEY
GPIOA6 RX
GPIOA7 TX
GPIOA8 LED_B
GPIOA9 LED_R
GPIOB1 LED_G
GPIOB2 SRST
SPI_MOSI TDI
SPI_MISO TDO
SPI_SCK TCK
SPI_CS TMS
KEY VL_KEY
5V VL_5V
TDI VL_TDI
TMS VL_TMS
TCK VL_TCK
SRST VL_SRST
TDO VL_TDO
TX VL_TX
RX VL_RX
2x5_2.54.1001
C1005 10uF
C1008 1uF
L1004 4.7uH,MPL2012S4R7MHT
C1009 10uF
C1010 10uF
C1011 NC
AE1001 Antenna_Shield
L1003 0R
C1002 NC
L1001 0R
U1001
AIC8800FC
RF_IND
V_CORE
VIO
FLS_IO0
FLS_CLK
FLS_IO3
FLS_IO2
FLS_IO1
C1012 1uF
C1013 1uF
R1003 47k
POWER_SYS
POWER_KEY
Y1001 26M, 10PPM
C1003 4.3pF
C1006 4.3pF
C1007 1uF
V_FLS
U1002
P25Q80H/P25Q64H/P25Q128HA
CS
CLK
VCC
DI(IO0)
DO(IO1)
IO2
IO3
GND
EP
FLS_CS
FLS_CLK
FLS_IO0
FLS_IO1
FLS_IO2
FLS_IO3

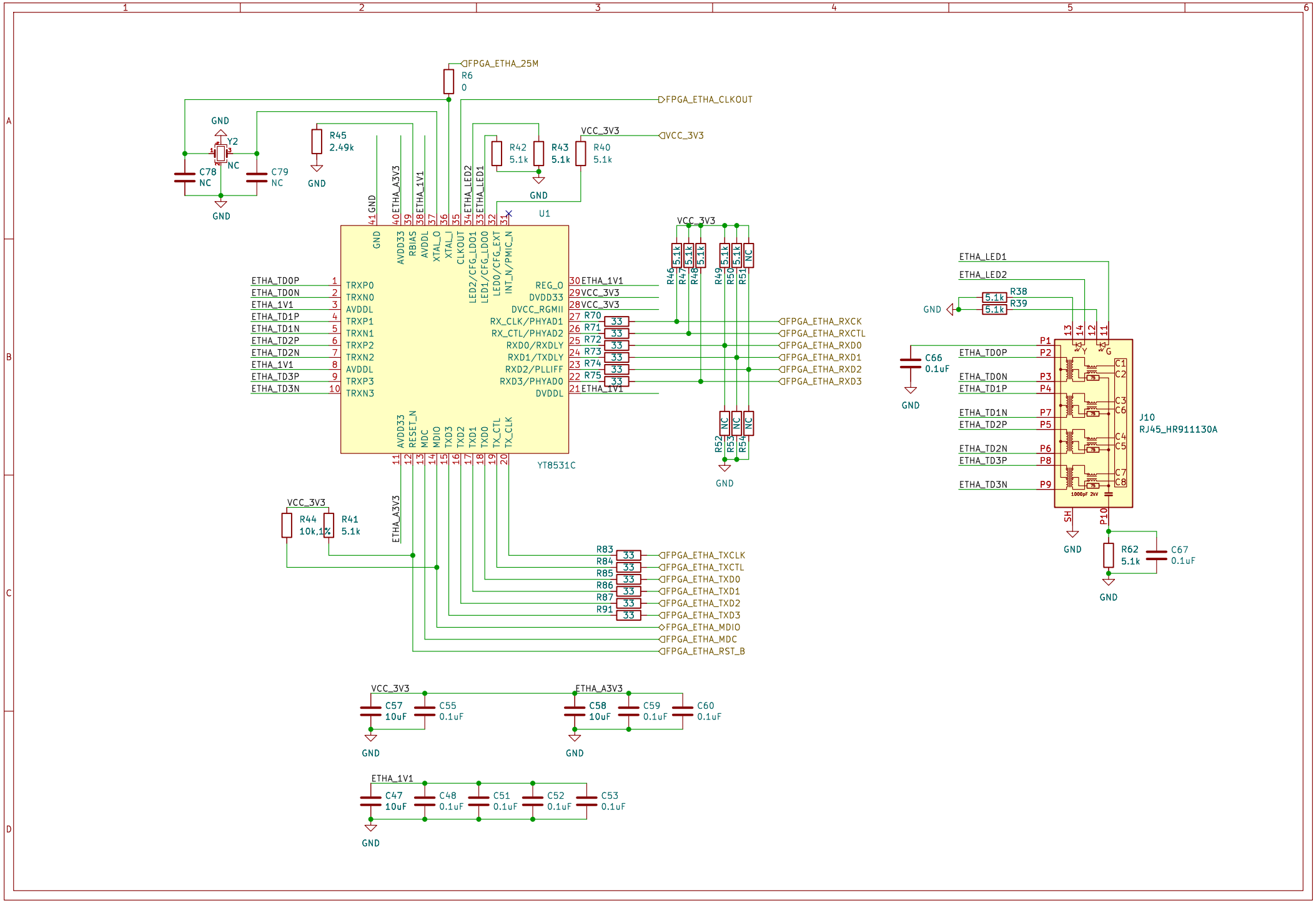
FPGA_ETHA_25M
R6
0
FPGA_ETHA_CLKOUT
GND
Y2
NC
C78
NC
C79
NC
R45
2.49k
VCC_3V3
R42
5.1k
R43
5.1k
R40
5.1k
U1
YT8531C
ETHA_TD0P
ETHA_TD0N
ETHA_1V1
ETHA_TD1P
ETHA_TD1N
ETHA_TD2P
ETHA_TD2N
ETHA_TD3P
ETHA_TD3N
REG_O
DVDD33
DVCC_RGMII
RX_CLK/PHYAD1
RX_CTL/PHYAD2
RXD0/RXDLY
RXD1/TXDLY
RXD2/PLLIFF
RXD3/PHYAD0
DVDDL
FPGA_ETHA_RXCK
FPGA_ETHA_RXCTL
FPGA_ETHA_RXD0
FPGA_ETHA_RXD1
FPGA_ETHA_RXD2
FPGA_ETHA_RXD3
R44
10k,1%
R41
5.1k
ETHA_A3V3
FPGA_ETHA_TXCLK
FPGA_ETHA_TXCTL
FPGA_ETHA_TXD0
FPGA_ETHA_TXD1
FPGA_ETHA_TXD2
FPGA_ETHA_TXD3
FPGA_ETHA_MDIO
FPGA_ETHA_MDC
FPGA_ETHA_RST_B
ETHA_LED1
ETHA_LED2
R38
R39
C66
0.1uF
J10
RJ45_HR911130A
R62
5.1k
C67
0.1uF
C57
10uF
C55
0.1uF
C58
10uF
C59
0.1uF
C60
0.1uF
C47
10uF
C48
0.1uF
C51
0.1uF
C52
0.1uF
C53
0.1uF

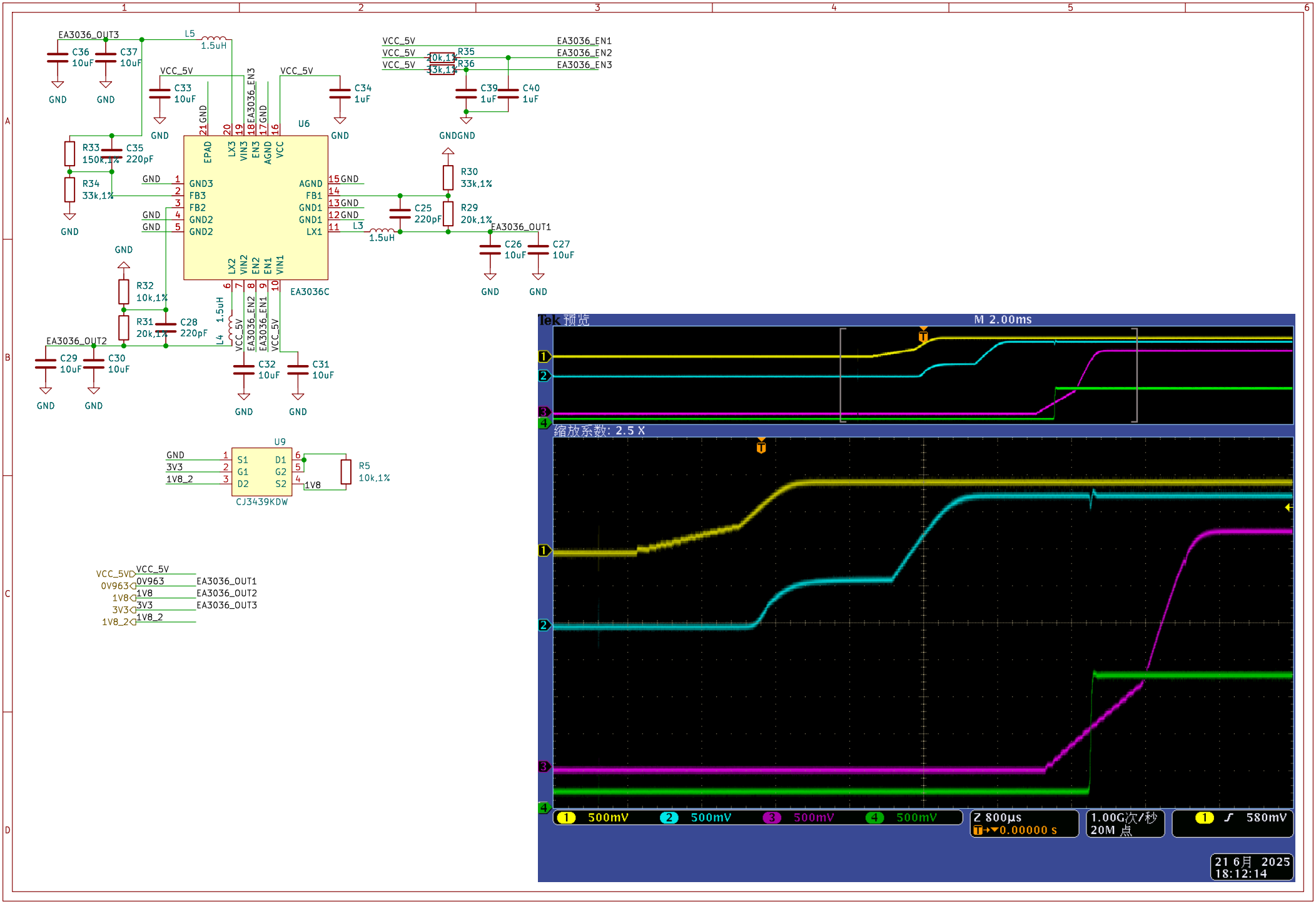
EA3036_OUT3
L5
1.5uH
C36
10uF
C37
10uF
GND
VCC_5V
C33
10uF
C34
1uF
U6
EA3036C
EPAD
LX3
VIN3
EN3
AGND
VCC
GND3
FB3
FB2
GND2
GND2
AGND
FB1
GND1
GND1
LX1
LX2
VIN2
EN2
EN1
VIN1
EA3036_EN3
EA3036_EN1
EA3036_EN2
R33
150k,1%
C35
220pF
R34
33k,1%
R32
10k,1%
R31
20k,1%
C28
220pF
L4
1.5uH
EA3036_OUT2
C29
10uF
C30
10uF
C32
10uF
C31
10uF
EA3036_EN1
EA3036_EN2
EA3036_EN3
R35
10k,1%
R36
33k,1%
C39
1uF
C40
1uF
R30
33k,1%
R29
20k,1%
C25
220pF
L3
1.5uH
EA3036_OUT1
C26
10uF
C27
10uF
U9
CJ3439KDW
S1
G1
D2
D1
G2
S2
3V3
1V8_2
1V8
R5
10k,1%
VCC_5VD
0V963
1V8
3V3
1V8_2
EA3036_OUT1
EA3036_OUT2
EA3036_OUT3
Tek 预览
M 2.00ms
缩放系数: 2.5 X
500mV
500mV
500mV
500mV
Z 800µs
0.00000 s
1.00G次/秒
20M 点
580mV
21 6月 2025
18:12:14