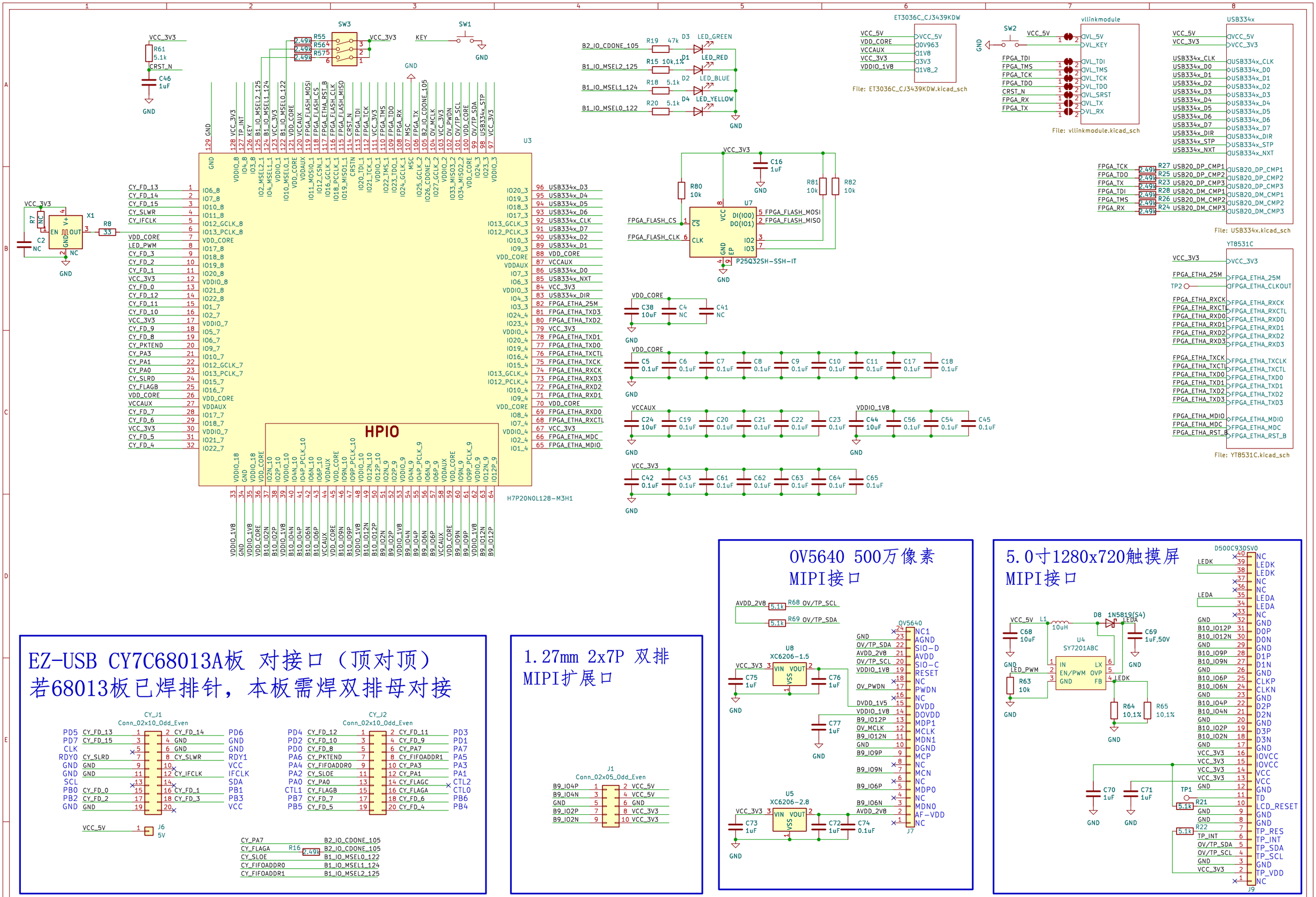
HPIO
H7P20N0L128-M3H1
U3
SW3
SW1
KEY
GND
VCC_3V3
CRST_N
R61 5.1k
C46 1uF
B2_IO_CDONE_105
B1_IO_MSEL2_125
B1_IO_MSEL1_124
B1_IO_MSEL0_122
R19 47k
R15 10k,1%
R18 5.1k
R20 5.1k
D3 LED_GREEN
D1 LED_RED
D2 LED_BLUE
D4 LED_YELLOW
ET3036C_CJ3439KDW
File: ET3036C_CJ3439KDW.kicad_sch
vllinkmodule
File: vllinkmodule.kicad_sch
USB334x
File: USB334x.kicad_sch
YT8531C
File: YT8531C.kicad_sch
X1
R7 NC
R8 33
C2 NC
U7
P25Q32SH-SSH-IT
FPGA_FLASH_CS
FPGA_FLASH_CLK
FPGA_FLASH_MOSI
FPGA_FLASH_MISO
R80 10k
R81 10k
R82 10k
C16 1uF
VDD_CORE
VCCAUX
VDDIO_1V8
C38 10uF
C4 NC
C41 NC
C5 0.1uF
C6 0.1uF
C7 0.1uF
C8 0.1uF
C9 0.1uF
C10 0.1uF
C11 0.1uF
C17 0.1uF
C18 0.1uF
C24 10uF
C19 0.1uF
C20 0.1uF
C21 0.1uF
C22 0.1uF
C23 0.1uF
C44 10uF
C56 0.1uF
C54 0.1uF
C45 0.1uF
C42 0.1uF
C43 0.1uF
C61 0.1uF
C62 0.1uF
C63 0.1uF
C64 0.1uF
C65 0.1uF
R27 USB20_DP_CMP1
R25 USB20_DP_CMP2
R23 USB20_DP_CMP3
R28 USB20_DM_CMP1
R26 USB20_DM_CMP2
R24 USB20_DM_CMP3
EZ-USB CY7C68013A板 对接口（顶对顶）
若68013板已焊排针，本板需焊双排母对接
CY_J1
Conn_02x10_Odd_Even
CY_J2
Conn_02x10_Odd_Even
J6
5V
R16 2.49k
1.27mm 2x7P 双排
MIPI扩展口
J1
Conn_02x05_Odd_Even
OV5640 500万像素
MIPI接口
OV5640
J7
U8
XC6206-1.5
U5
XC6206-2.8
5.0寸1280x720触摸屏
MIPI接口
D500C930SV0
J9
U4
SY7201ABC
D8 1N5819(S4)
L1 10uH
C68 10uF
C69 1uF,50V
R63 10k
R64 10,1%
R65 10,1%
C70 1uF
C71 1uF
TP1
R21 5.1k
R22 5.1k

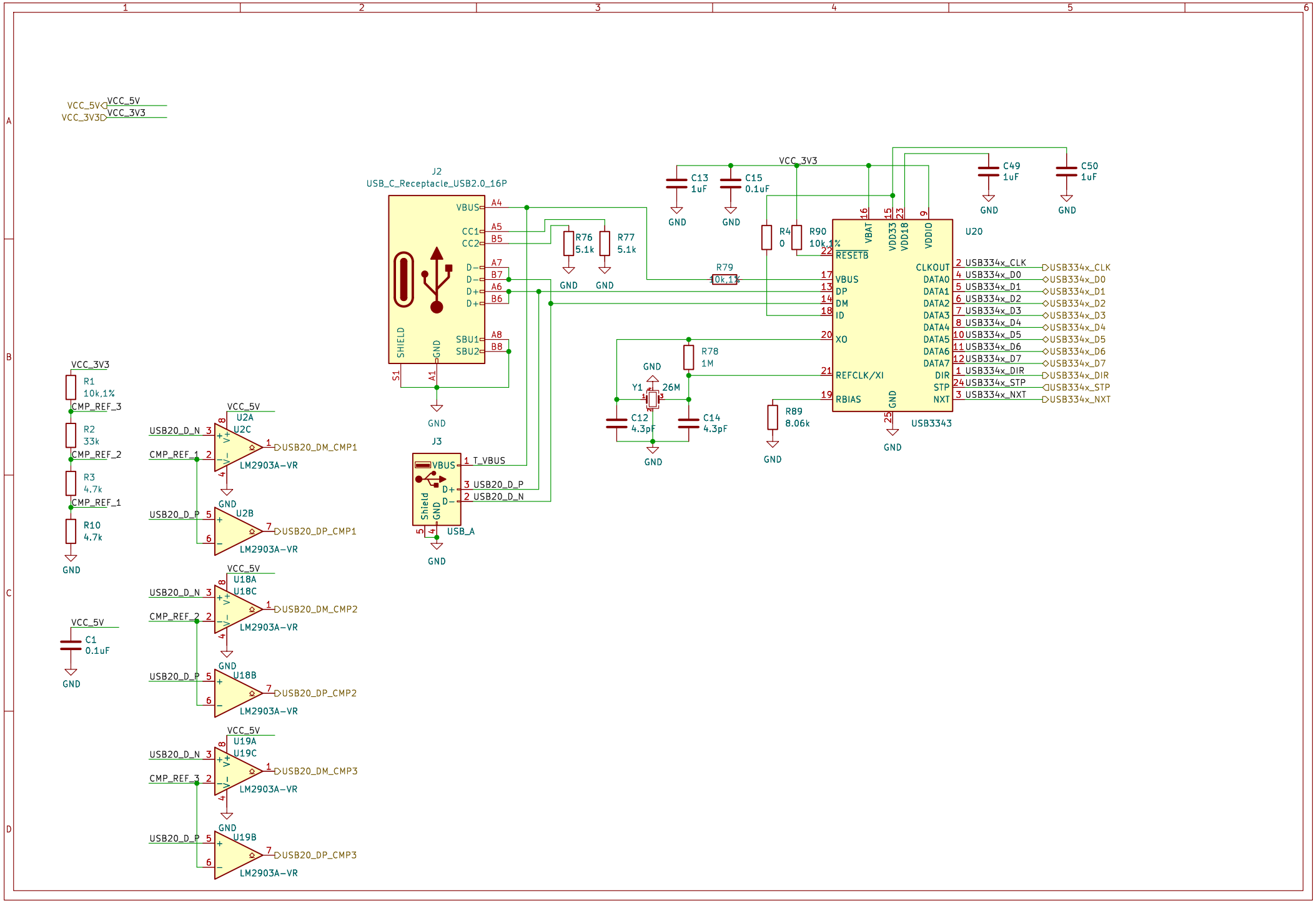
VCC_5V
VCC_3V3
J2
USB_C_Receptacle_USB2.0_16P
VBUS
CC1
CC2
D−
D−
D+
D+
SHIELD
GND
SBU1
SBU2
A4
A5
B5
A7
B7
A6
B6
A8
B8
S1
A1
R76
5.1k
R77
5.1k
C13
1uF
C15
0.1uF
C49
1uF
C50
1uF
R4
0
R90
10k,1%
R79
10k,1%
R78
1M
Y1
26M
C12
4.3pF
C14
4.3pF
R89
8.06k
U20
USB3343
RESETB
VBUS
DP
DM
ID
XO
REFCLK/XI
RBIAS
VBAT
VDD33
VDD18
VDDIO
CLKOUT
DATA0
DATA1
DATA2
DATA3
DATA4
DATA5
DATA6
DATA7
DIR
STP
NXT
USB334x_CLK
USB334x_D0
USB334x_D1
USB334x_D2
USB334x_D3
USB334x_D4
USB334x_D5
USB334x_D6
USB334x_D7
USB334x_DIR
USB334x_STP
USB334x_NXT
J3
VBUS
D+
D−
Shield
GND
T_VBUS
USB20_D_P
USB20_D_N
USB_A
R1
10k,1%
R2
33k
R3
4.7k
R10
4.7k
CMP_REF_3
CMP_REF_2
CMP_REF_1
C1
0.1uF
U2A
U2C
U2B
LM2903A-VR
USB20_D_N
USB20_D_P
USB20_DM_CMP1
USB20_DP_CMP1
U18A
U18C
U18B
USB20_DM_CMP2
USB20_DP_CMP2
U19A
U19C
U19B
USB20_DM_CMP3
USB20_DP_CMP3

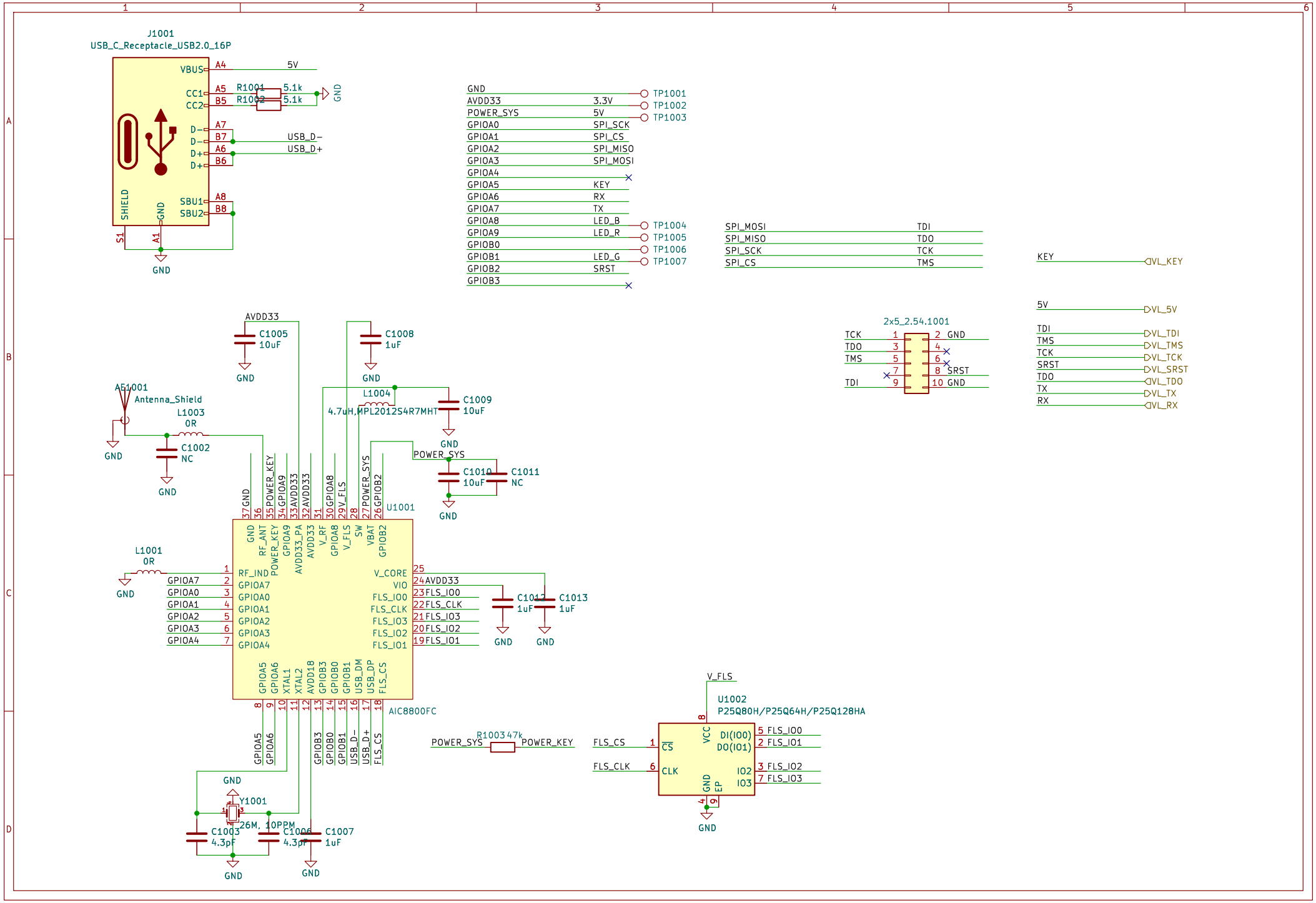
J1001
USB_C_Receptacle_USB2.0_16P
VBUS
CC1
CC2
D−
D+
SHIELD
GND
SBU1
SBU2
A4
A5
B5
A7
B7
A6
B6
A8
B8
S1
A1
5V
R1001 5.1k
R1002 5.1k
USB_D−
USB_D+
GND
TP1001
TP1002
TP1003
TP1004
TP1005
TP1006
TP1007
AVDD33 3.3V
POWER_SYS 5V
GPIOA0 SPI_SCK
GPIOA1 SPI_CS
GPIOA2 SPI_MISO
GPIOA3 SPI_MOSI
GPIOA5 KEY
GPIOA6 RX
GPIOA7 TX
GPIOA8 LED_B
GPIOA9 LED_R
GPIOB1 LED_G
GPIOB2 SRST
SPI_MOSI TDI
SPI_MISO TDO
SPI_SCK TCK
SPI_CS TMS
KEY VL_KEY
5V VL_5V
TDI VL_TDI
TMS VL_TMS
TCK VL_TCK
SRST VL_SRST
TDO VL_TDO
TX VL_TX
RX VL_RX
2x5_2.54.1001
C1005 10uF
C1008 1uF
L1004 4.7uH,MPL2012S4R7MHT
C1009 10uF
C1010 10uF
C1011 NC
AE1001 Antenna_Shield
L1003 0R
C1002 NC
L1001 0R
U1001
AIC8800FC
RF_IND
V_CORE
VIO
FLS_IO0
FLS_CLK
FLS_IO3
FLS_IO2
FLS_IO1
C1012 1uF
C1013 1uF
R1003 47k
POWER_SYS
POWER_KEY
Y1001 26M, 10PPM
C1003 4.3pF
C1006 4.3pF
C1007 1uF
V_FLS
U1002
P25Q80H/P25Q64H/P25Q128HA
CS
CLK
VCC
DI(IO0)
DO(IO1)
IO2
IO3
GND
EP
FLS_CS
FLS_CLK
FLS_IO0
FLS_IO1
FLS_IO2
FLS_IO3

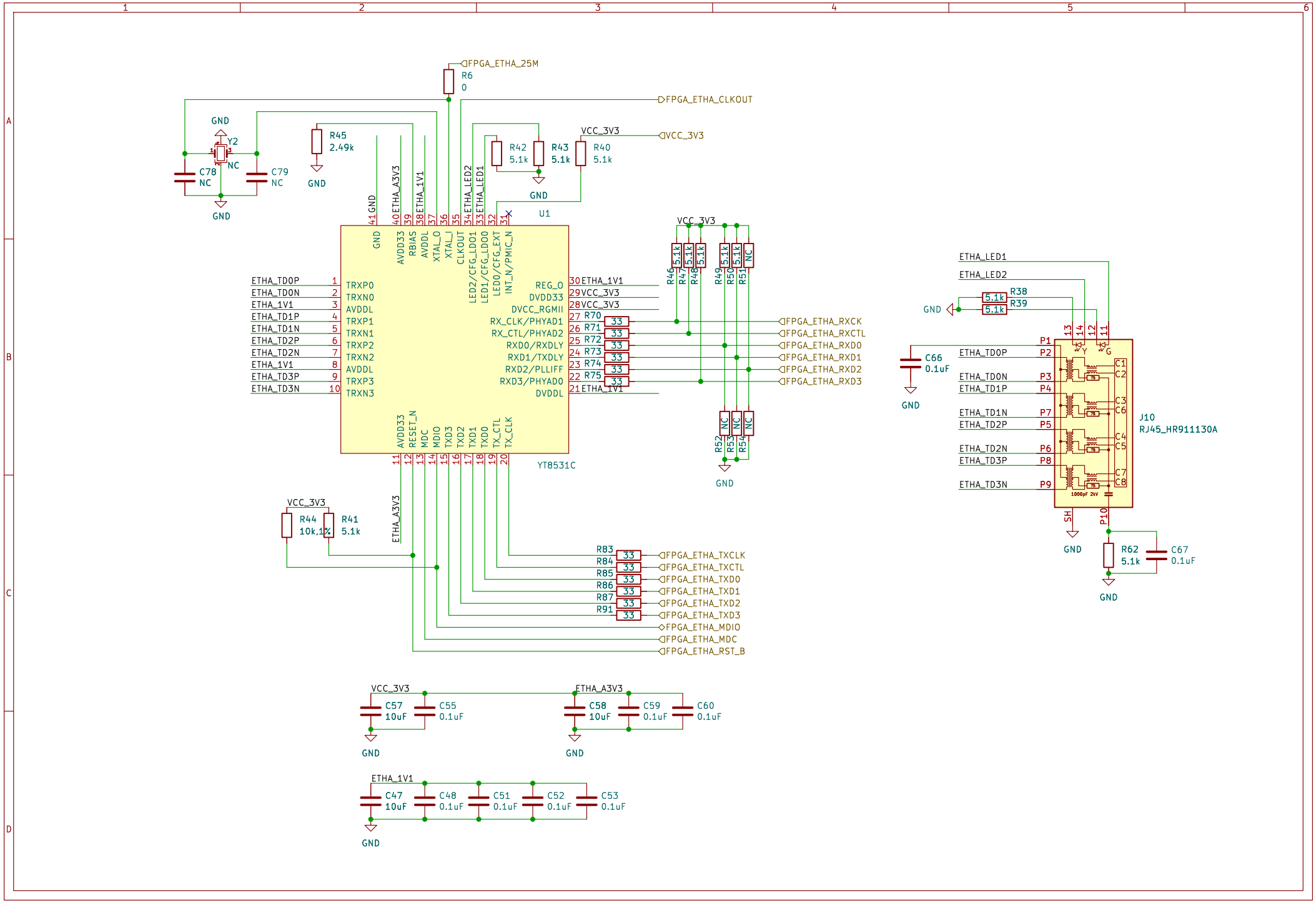
FPGA_ETHA_25M
R6
0
FPGA_ETHA_CLKOUT
GND
Y2
NC
C78
NC
C79
NC
R45
2.49k
VCC_3V3
R42
5.1k
R43
5.1k
R40
5.1k
U1
YT8531C
ETHA_TD0P
ETHA_TD0N
ETHA_1V1
ETHA_TD1P
ETHA_TD1N
ETHA_TD2P
ETHA_TD2N
ETHA_TD3P
ETHA_TD3N
REG_O
DVDD33
DVCC_RGMII
RX_CLK/PHYAD1
RX_CTL/PHYAD2
RXD0/RXDLY
RXD1/TXDLY
RXD2/PLLIFF
RXD3/PHYAD0
DVDDL
FPGA_ETHA_RXCK
FPGA_ETHA_RXCTL
FPGA_ETHA_RXD0
FPGA_ETHA_RXD1
FPGA_ETHA_RXD2
FPGA_ETHA_RXD3
R44
10k,1%
R41
5.1k
ETHA_A3V3
FPGA_ETHA_TXCLK
FPGA_ETHA_TXCTL
FPGA_ETHA_TXD0
FPGA_ETHA_TXD1
FPGA_ETHA_TXD2
FPGA_ETHA_TXD3
FPGA_ETHA_MDIO
FPGA_ETHA_MDC
FPGA_ETHA_RST_B
ETHA_LED1
ETHA_LED2
R38
R39
C66
0.1uF
J10
RJ45_HR911130A
R62
5.1k
C67
0.1uF
C57
10uF
C55
0.1uF
C58
10uF
C59
0.1uF
C60
0.1uF
C47
10uF
C48
0.1uF
C51
0.1uF
C52
0.1uF
C53
0.1uF

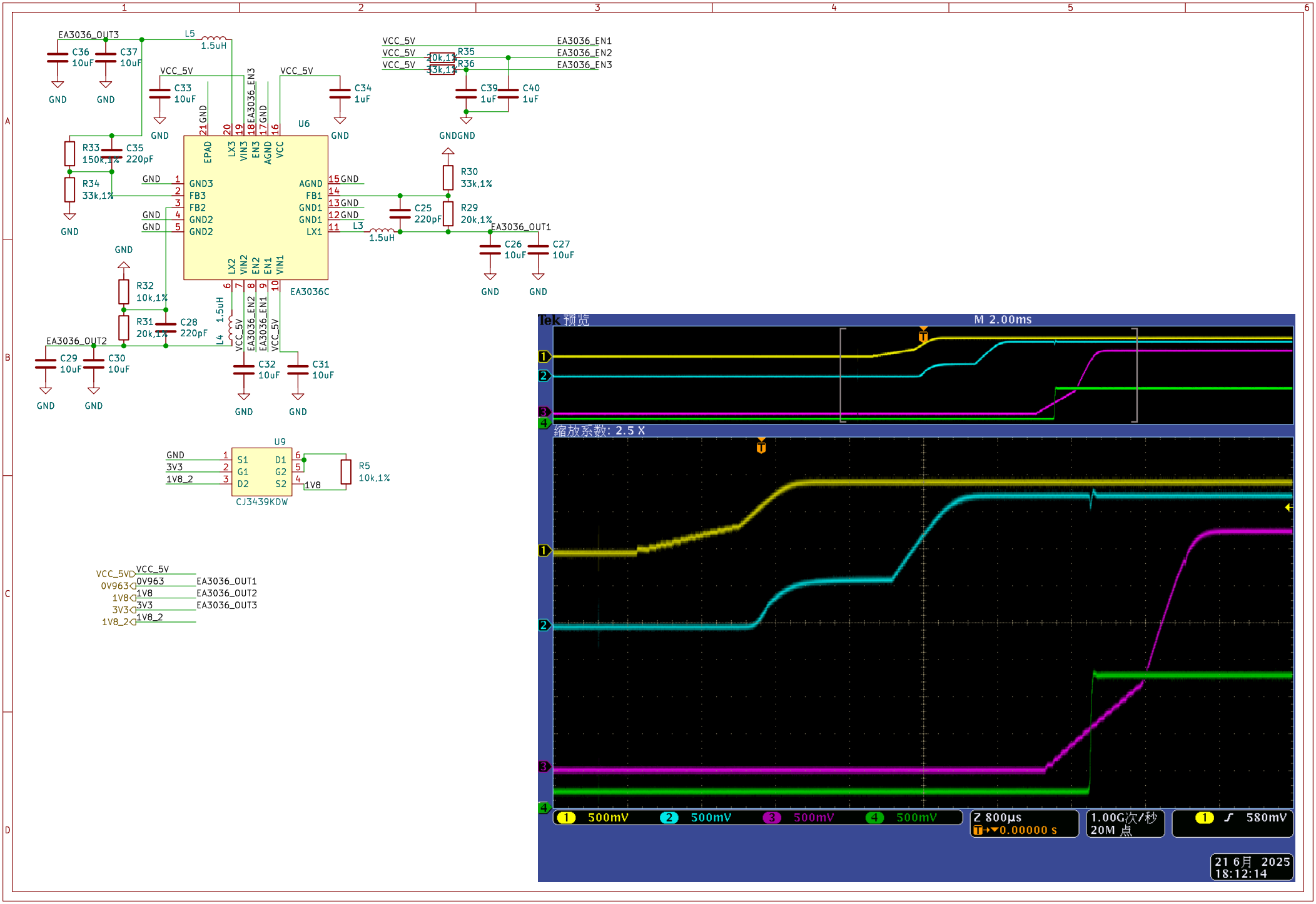
EA3036_OUT3
L5
1.5uH
C36
10uF
C37
10uF
GND
VCC_5V
C33
10uF
C34
1uF
U6
EA3036C
EPAD
LX3
VIN3
EN3
AGND
VCC
GND3
FB3
FB2
GND2
GND2
AGND
FB1
GND1
GND1
LX1
LX2
VIN2
EN2
EN1
VIN1
EA3036_EN3
EA3036_EN1
EA3036_EN2
R33
150k,1%
C35
220pF
R34
33k,1%
R32
10k,1%
R31
20k,1%
C28
220pF
L4
1.5uH
EA3036_OUT2
C29
10uF
C30
10uF
C32
10uF
C31
10uF
EA3036_EN1
EA3036_EN2
EA3036_EN3
R35
10k,1%
R36
33k,1%
C39
1uF
C40
1uF
R30
33k,1%
R29
20k,1%
C25
220pF
L3
1.5uH
EA3036_OUT1
C26
10uF
C27
10uF
U9
CJ3439KDW
S1
G1
D2
D1
G2
S2
3V3
1V8_2
1V8
R5
10k,1%
VCC_5VD
0V963
1V8
3V3
1V8_2
EA3036_OUT1
EA3036_OUT2
EA3036_OUT3
Tek 预览
M 2.00ms
缩放系数: 2.5 X
500mV
500mV
500mV
500mV
Z 800µs
0.00000 s
1.00G次/秒
20M 点
580mV
21 6月 2025
18:12:14