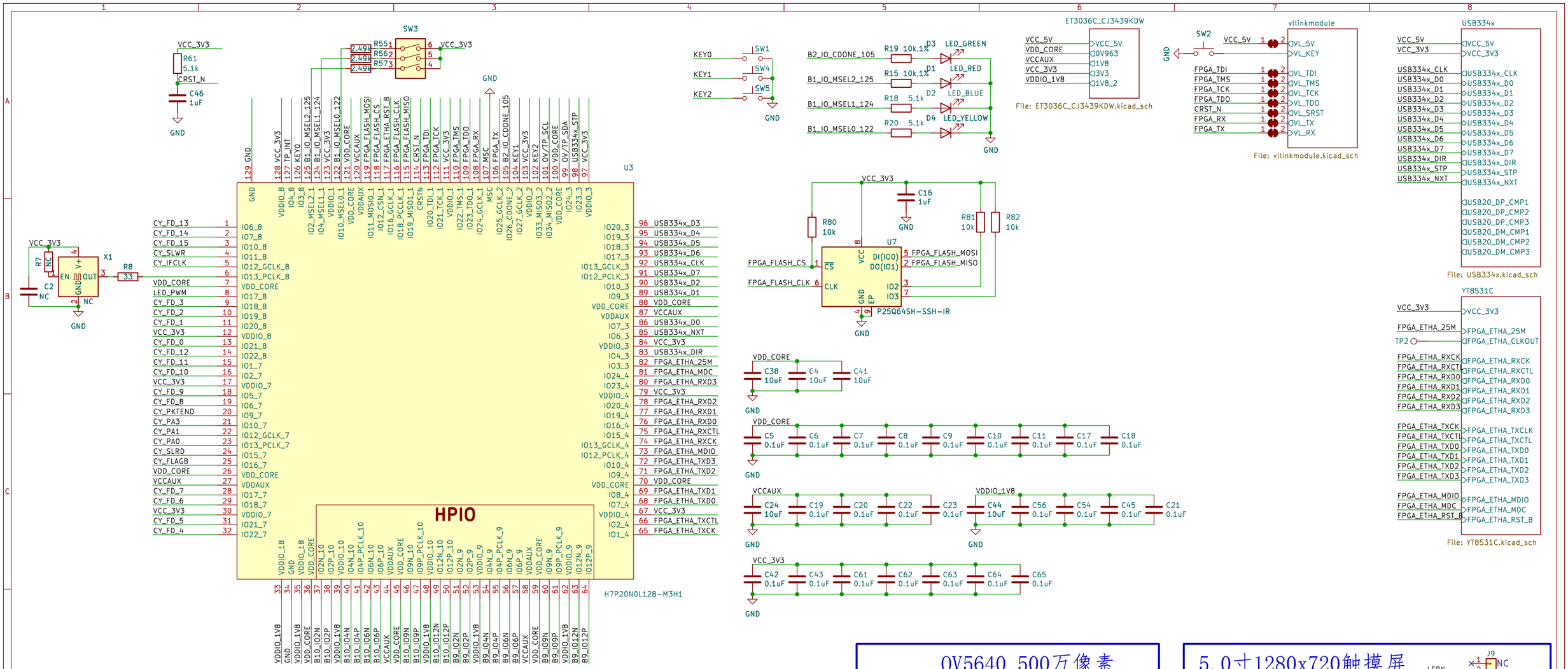

EZ-USB CY7C68013A板 对接口（顶对顶）若68013板已焊排针，本板需焊双排母对接

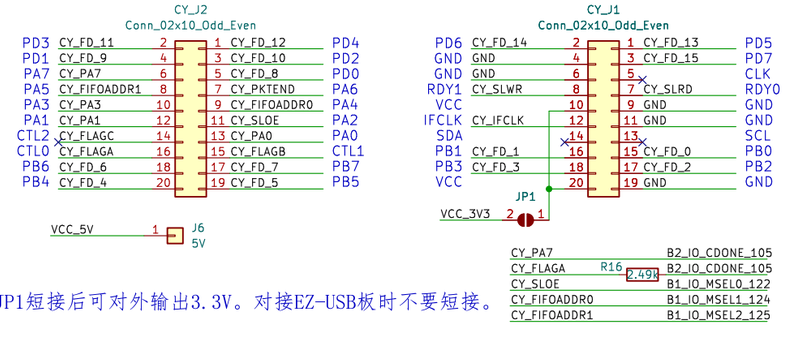

注：JP1短接后可对外输出3.3V。对接EZ-USB板时不要短接。

1.27mm 2x7P 双排 MIPI扩展口

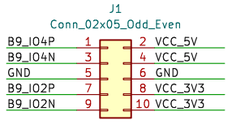

OV5640 500万像素 MIPI接口

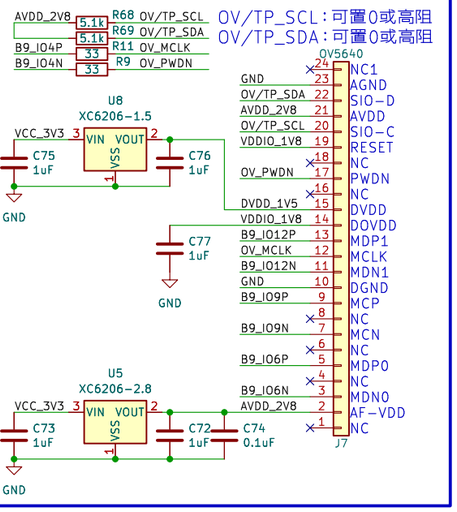

5.0寸1280x720触摸屏 MIPI接口

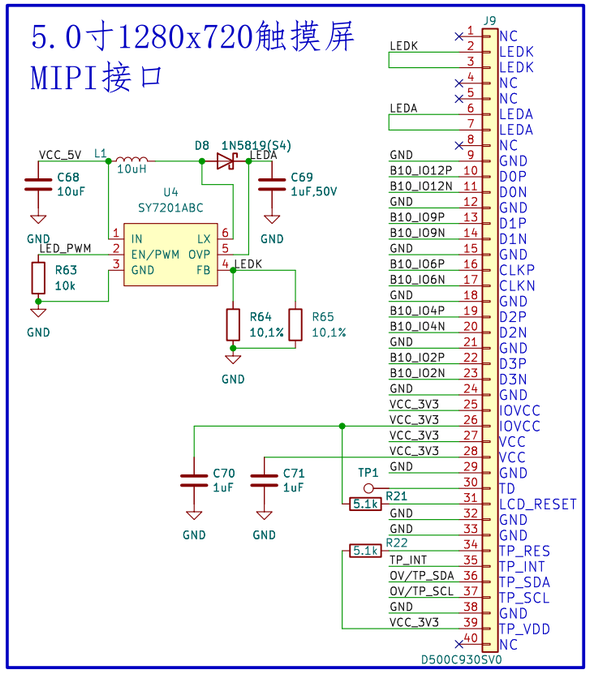

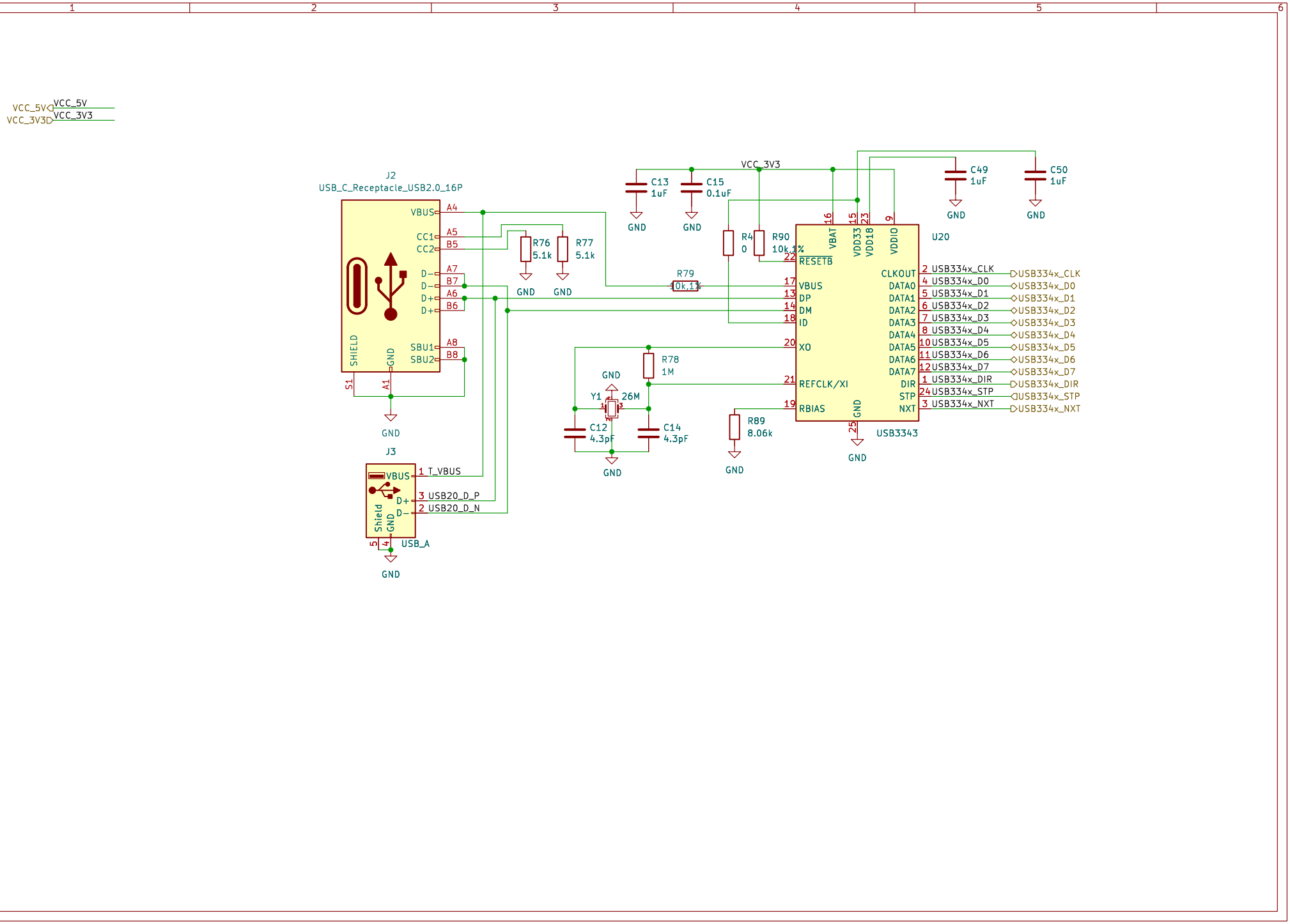
VCC_5V
VCC_3V3
J2
USB_C_Receptacle_USB2.0_16P
VBUS
CC1
CC2
D−
D+
SHIELD
GND
SBU1
SBU2
A4
A5
B5
A7
B7
A6
B6
A8
B8
S1
A1
R76
5.1k
R77
5.1k
C13
1uF
C15
0.1uF
C49
1uF
C50
1uF
R4
0
R90
10k,1%
R79
10k,1%
R78
1M
Y1
26M
C12
4.3pF
C14
4.3pF
R89
8.06k
U20
USB3343
VBAT
VDD33
VDD18
VDDIO
RESETB
VBUS
DP
DM
ID
XO
REFCLK/XI
RBIAS
CLKOUT
DATA0
DATA1
DATA2
DATA3
DATA4
DATA5
DATA6
DATA7
DIR
STP
NXT
USB334x_CLK
USB334x_D0
USB334x_D1
USB334x_D2
USB334x_D3
USB334x_D4
USB334x_D5
USB334x_D6
USB334x_D7
USB334x_DIR
USB334x_STP
USB334x_NXT
J3
T_VBUS
USB20_D_P
USB20_D_N
USB_A
Shield

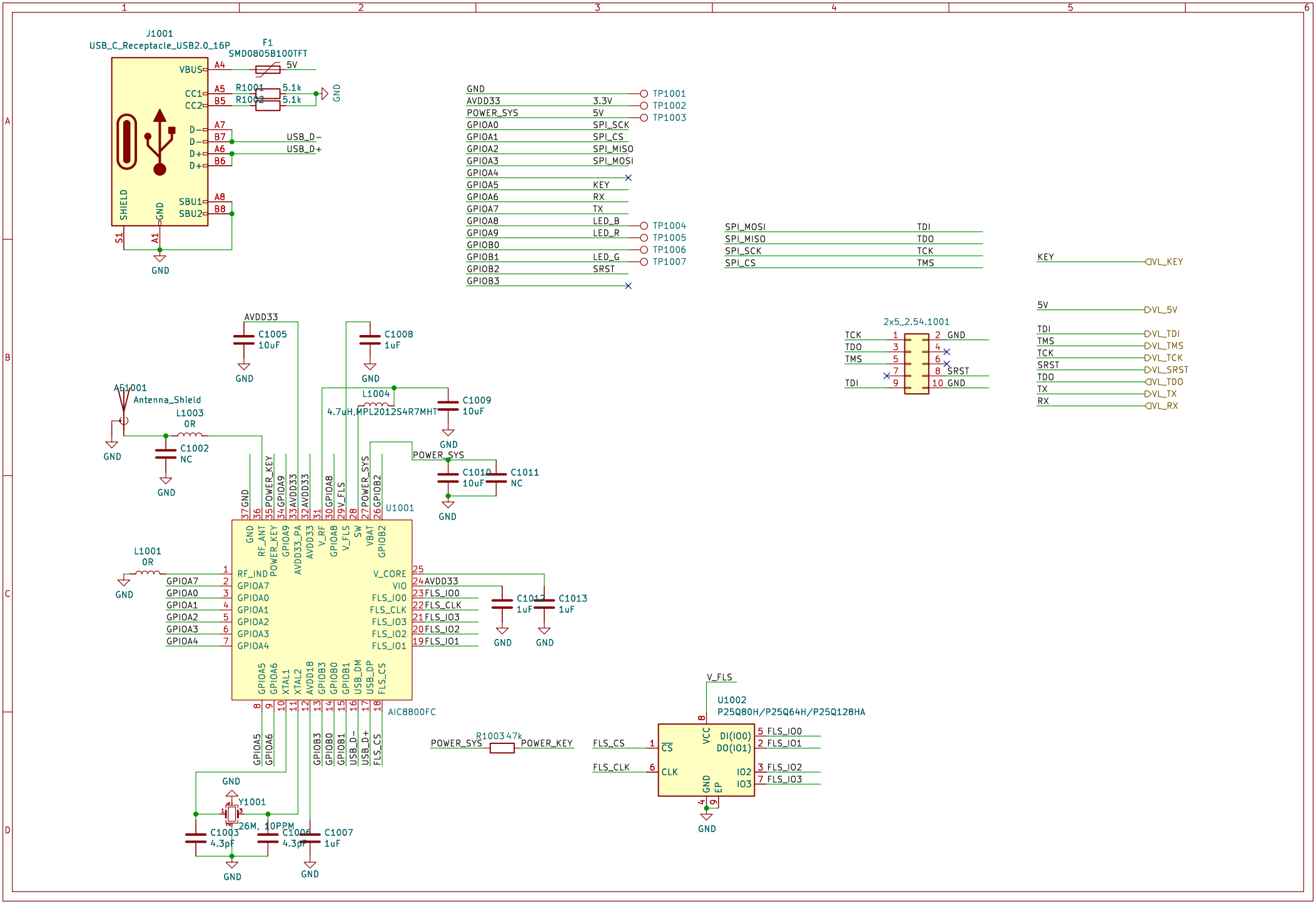
J1001
USB_C_Receptacle_USB2.0_16P
F1
SMD0805B100TFT
VBUS
A4
5V
CC1
A5
R1001
5.1k
CC2
B5
R1002
5.1k
GND
D-
A7
B7
USB_D-
D-
A6
USB_D+
D+
B6
D+
SHIELD
GND
SBU1
A8
SBU2
B8
S1
A1
GND
GND
TP1001
AVDD33
3.3V
TP1002
POWER_SYS
5V
TP1003
GPIOA0
SPI_SCK
GPIOA1
SPI_CS
GPIOA2
SPI_MISO
GPIOA3
SPI_MOSI
GPIOA4
GPIOA5
KEY
GPIOA6
RX
GPIOA7
TX
GPIOA8
LED_B
TP1004
GPIOA9
LED_R
TP1005
GPIOB0
TP1006
GPIOB1
LED_G
TP1007
GPIOB2
SRST
GPIOB3
SPI_MOSI
TDI
SPI_MISO
TDO
SPI_SCK
TCK
SPI_CS
TMS
KEY
VL_KEY
5V
VL_5V
TDI
VL_TDI
TMS
VL_TMS
TCK
VL_TCK
SRST
VL_SRST
TDO
VL_TDO
TX
VL_TX
RX
VL_RX
2x5_2.54.1001
TCK
TDO
TMS
TDI
GND
SRST
GND
AVDD33
C1005
10uF
GND
C1008
1uF
GND
AE1001
Antenna_Shield
L1003
0R
C1002
NC
GND
GND
L1004
4.7uH,MPL2012S4R7MHT
C1009
10uF
GND
POWER_SYS
C1010
10uF
C1011
NC
GND
U1001
AIC8800FC
L1001
0R
GND
RF_IND
GPIOA7
GPIOA0
GPIOA1
GPIOA2
GPIOA3
GPIOA4
V_CORE
VIO
FLS_IO0
FLS_CLK
FLS_IO3
FLS_IO2
FLS_IO1
C1012
1uF
C1013
1uF
GND
GND
GND

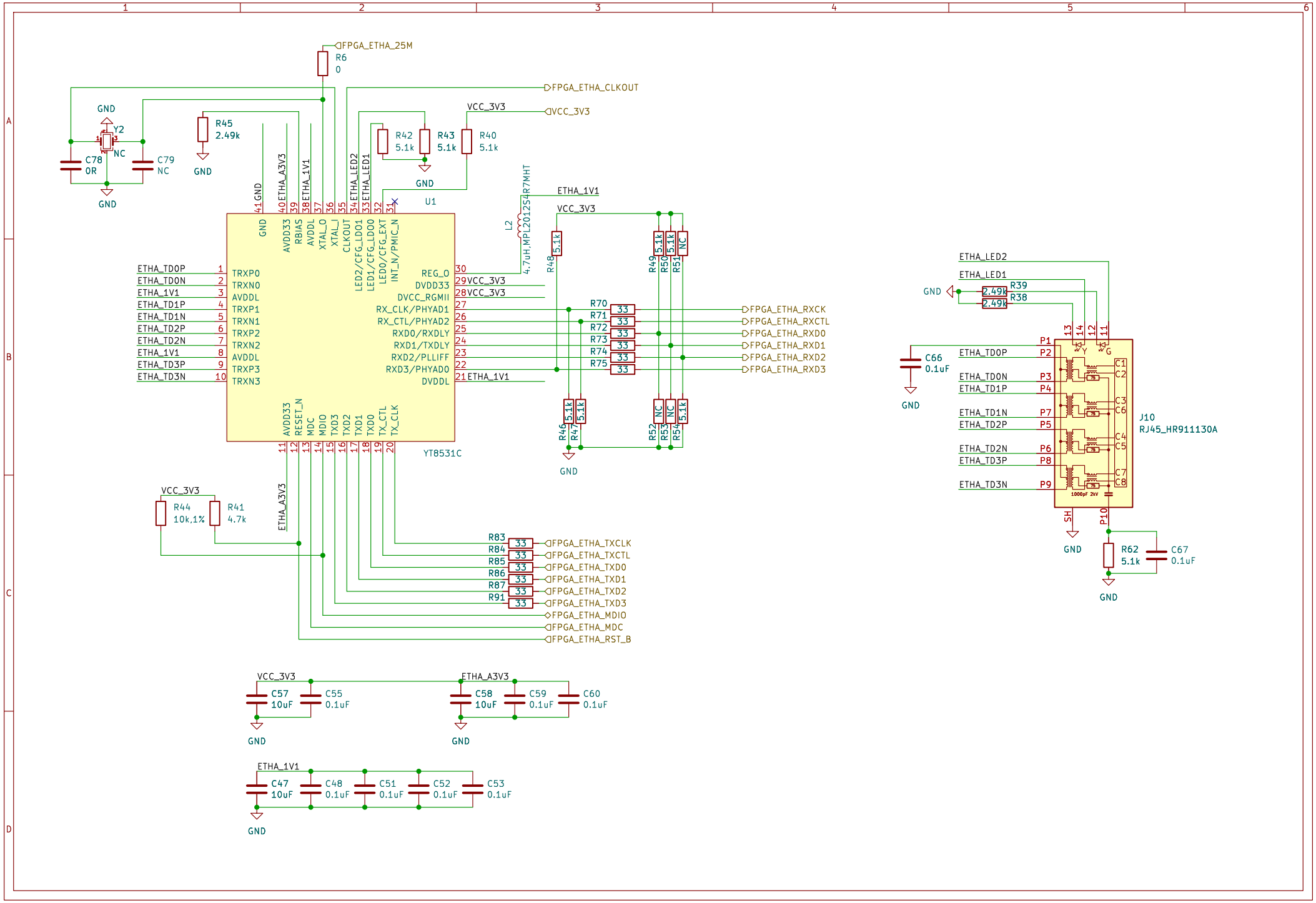
FPGA_ETHA_25M
R6
0
FPGA_ETHA_CLKOUT
VCC_3V3
GND
Y2
NC
C78
0R
C79
NC
R45
2.49k
R42
5.1k
R43
5.1k
R40
5.1k
U1
YT8531C
ETHA_1V1
ETHA_A3V3
L2
4.7uH,MPL2012S4R7MHT
R48
5.1k
R49
5.1k
R50
5.1k
R51
NC
R46
5.1k
R47
5.1k
R52
NC
R53
NC
R54
5.1k
ETHA_TD0P
ETHA_TD0N
ETHA_TD1P
ETHA_TD1N
ETHA_TD2P
ETHA_TD2N
ETHA_TD3P
ETHA_TD3N
TRXP0
TRXN0
AVDDL
TRXP1
TRXN1
TRXP2
TRXN2
TRXP3
TRXN3
REG_O
DVDD33
DVCC_RGMII
RX_CLK/PHYAD1
RX_CTL/PHYAD2
RXD0/RXDLY
RXD1/TXDLY
RXD2/PLLIFF
RXD3/PHYAD0
DVDDL
AVDD33
RESET_N
MDC
MDIO
TXD3
TXD2
TXD1
TXD0
TX_CTL
TX_CLK
R70
R71
R72
R73
R74
R75
33
FPGA_ETHA_RXCK
FPGA_ETHA_RXCTL
FPGA_ETHA_RXD0
FPGA_ETHA_RXD1
FPGA_ETHA_RXD2
FPGA_ETHA_RXD3
R44
10k,1%
R41
4.7k
R83
R84
R85
R86
R87
R91
FPGA_ETHA_TXCLK
FPGA_ETHA_TXCTL
FPGA_ETHA_TXD0
FPGA_ETHA_TXD1
FPGA_ETHA_TXD2
FPGA_ETHA_TXD3
FPGA_ETHA_MDIO
FPGA_ETHA_MDC
FPGA_ETHA_RST_B
C57
10uF
C55
0.1uF
C58
10uF
C59
0.1uF
C60
0.1uF
C47
10uF
C48
0.1uF
C51
0.1uF
C52
0.1uF
C53
0.1uF
ETHA_LED2
ETHA_LED1
R39
2.49k
R38
2.49k
C66
0.1uF
J10
RJ45_HR911130A
SH
P10
R62
5.1k
C67
0.1uF

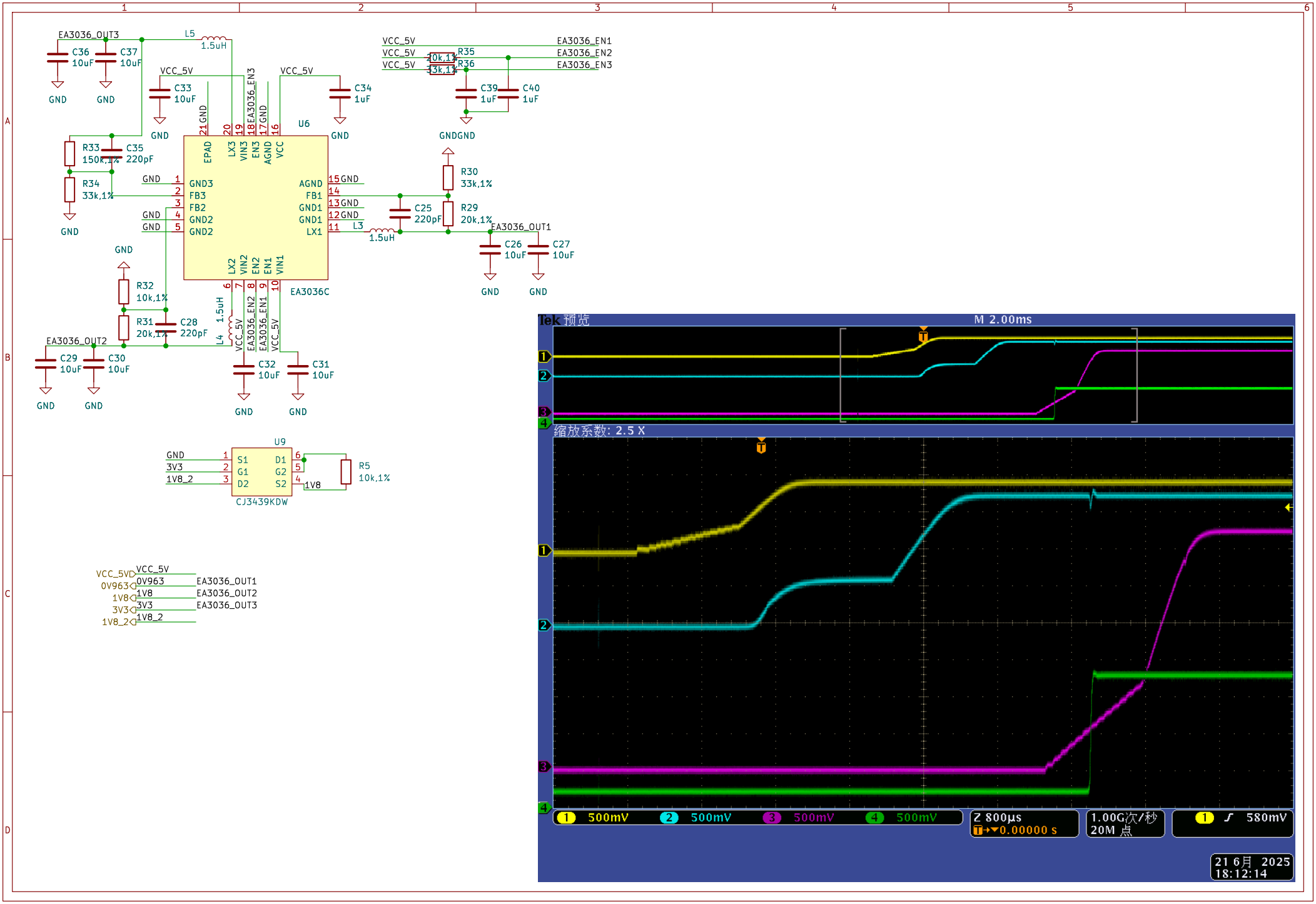
EA3036_OUT3
L5
1.5uH
C36
10uF
C37
10uF
GND
VCC_5V
C33
10uF
C34
1uF
U6
EPAD
LX3
VIN3
EN3
AGND
VCC
GND3
FB3
FB2
GND2
GND2
AGND
FB1
GND1
GND1
LX1
LX2
VIN2
EN2
EN1
VIN1
EA3036C
R33
150k,1%
C35
220pF
R34
33k,1%
R32
10k,1%
R31
20k,1%
C28
220pF
EA3036_OUT2
C29
10uF
C30
10uF
L4
1.5uH
C32
10uF
C31
10uF
VCC_5V
EA3036_EN1
EA3036_EN2
EA3036_EN3
R35
10k,1%
R36
33k,1%
C39
1uF
C40
1uF
R30
33k,1%
R29
20k,1%
C25
220pF
L3
1.5uH
EA3036_OUT1
C26
10uF
C27
10uF
U9
S1
G1
D2
D1
G2
S2
3V3
1V8_2
1V8
CJ3439KDW
R5
10k,1%
VCC_5VD
0V963
1V8
3V3
1V8_2
EA3036_OUT1
EA3036_OUT2
EA3036_OUT3
Tek 预览
M 2.00ms
缩放系数: 2.5 X
500mV
500mV
500mV
500mV
Z 800µs
0.00000 s
1.00G次/秒
20M 点
580mV
21 6月 2025
18:12:14