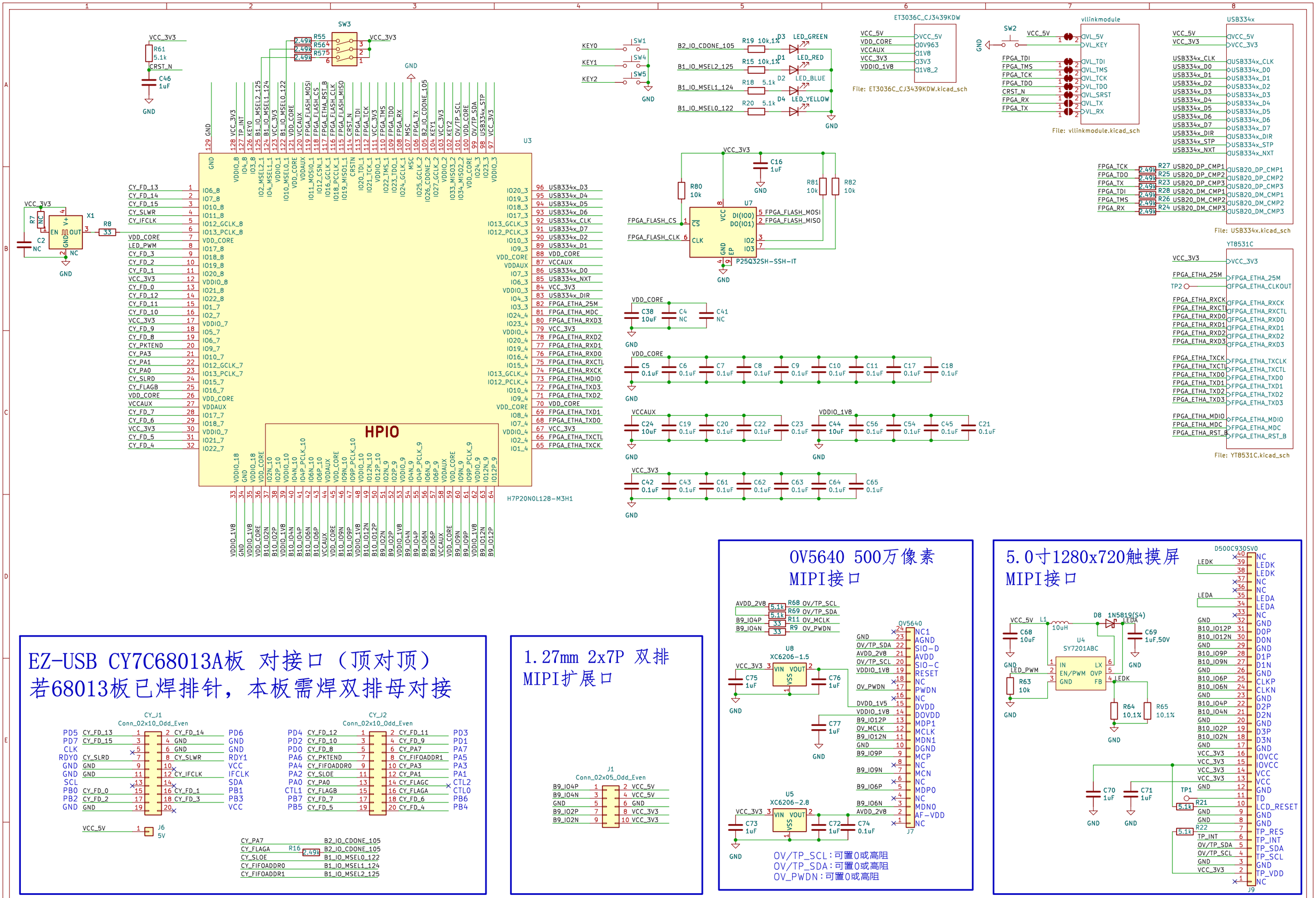
HPIO
H7P20N0L128-M3H1
U3
U7
P25Q32SH-SSH-IT
SW3
SW1
SW4
SW5
SW2
X1
ET3036C_CJ3439KDW
File: ET3036C_CJ3439KDW.kicad_sch
vllinkmodule
File: vllinkmodule.kicad_sch
USB334x
File: USB334x.kicad_sch
YT8531C
File: YT8531C.kicad_sch
CY_J1
Conn_02x10_Odd_Even
CY_J2
Conn_02x10_Odd_Even
J1
Conn_02x05_Odd_Even
J6
5V
OV5640
U8
XC6206-1.5
U5
XC6206-2.8
J7
U4
SY7201ABC
D500C930SV0
J9
EZ-USB CY7C68013A板 对接口（顶对顶）
若68013板已焊排针，本板需焊双排母对接
1.27mm 2x7P 双排
MIPI扩展口
OV5640 500万像素
MIPI接口
OV/TP_SCL：可置0或高阻
OV/TP_SDA：可置0或高阻
OV_PWDN：可置0或高阻
5.0寸1280x720触摸屏
MIPI接口

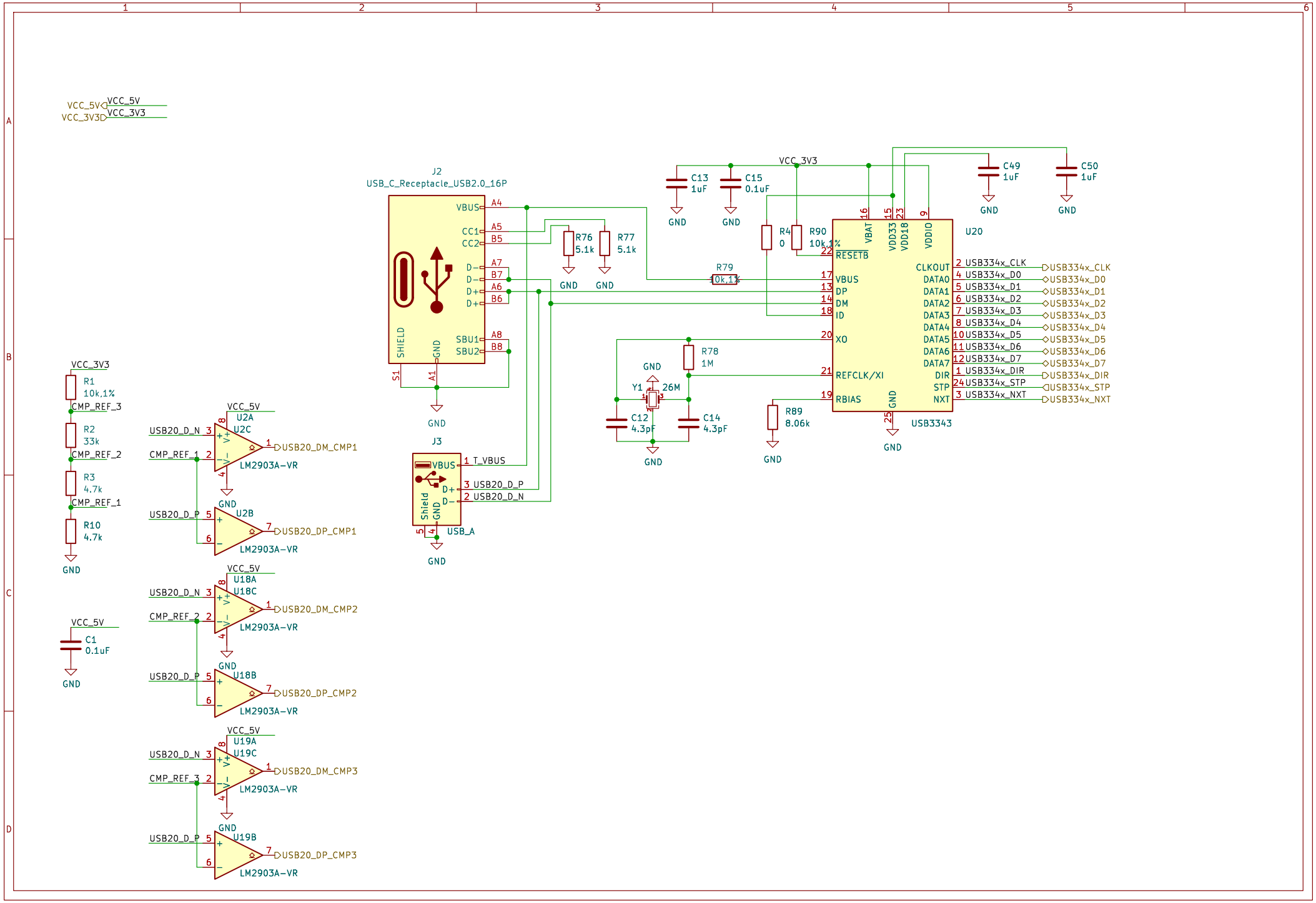
VCC_5V
VCC_3V3
J2
USB_C_Receptacle_USB2.0_16P
VBUS
CC1
CC2
D−
D+
SHIELD
GND
SBU1
SBU2
S1
A1
A4
A5
B5
A7
B7
A6
B6
A8
B8
R76
5.1k
R77
5.1k
C13
1uF
C15
0.1uF
C49
1uF
C50
1uF
R4
0
R90
10k,1%
R79
10k,1%
R78
1M
R89
8.06k
Y1
26M
C12
4.3pF
C14
4.3pF
U20
USB3343
RESETB
VBUS
DP
DM
ID
XO
REFCLK/XI
RBIAS
VBAT
VDD33
VDD18
VDDIO
CLKOUT
DATA0
DATA1
DATA2
DATA3
DATA4
DATA5
DATA6
DATA7
DIR
STP
NXT
USB334x_CLK
USB334x_D0
USB334x_D1
USB334x_D2
USB334x_D3
USB334x_D4
USB334x_D5
USB334x_D6
USB334x_D7
USB334x_DIR
USB334x_STP
USB334x_NXT
J3
T_VBUS
USB20_D_P
USB20_D_N
Shield
USB_A
R1
10k,1%
R2
33k
R3
4.7k
R10
4.7k
CMP_REF_3
CMP_REF_2
CMP_REF_1
C1
0.1uF
U2A
U2C
U2B
U18A
U18C
U18B
U19A
U19C
U19B
LM2903A-VR
USB20_DM_CMP1
USB20_DP_CMP1
USB20_DM_CMP2
USB20_DP_CMP2
USB20_DM_CMP3
USB20_DP_CMP3

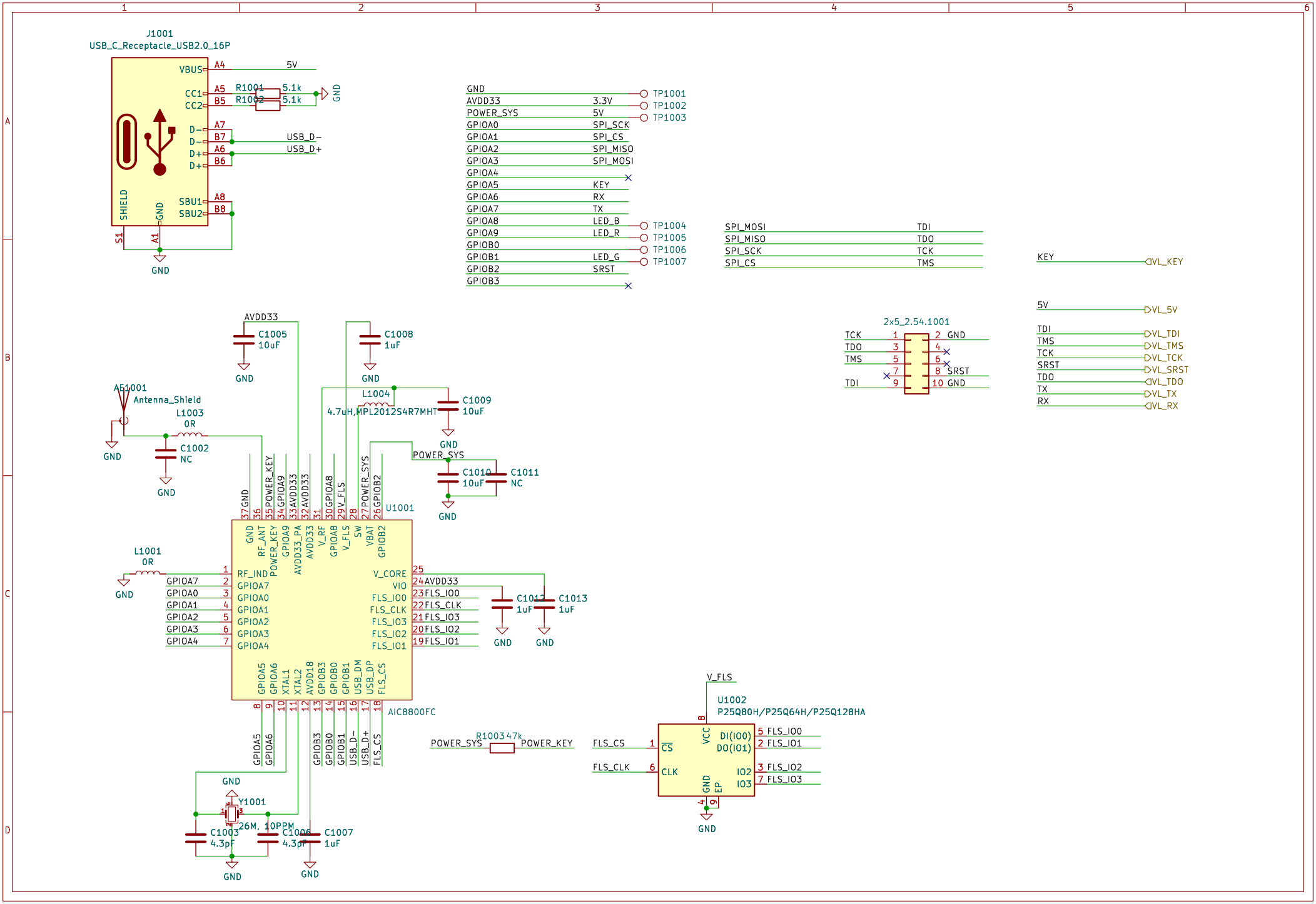
J1001
USB_C_Receptacle_USB2.0_16P
VBUS
CC1
CC2
D−
D+
SHIELD
GND
SBU1
SBU2
A4
A5
B5
A7
B7
A6
B6
A8
B8
S1
A1
5V
R1001 5.1k
R1002 5.1k
USB_D−
USB_D+
GND
TP1001
TP1002
TP1003
TP1004
TP1005
TP1006
TP1007
AVDD33 3.3V
POWER_SYS 5V
GPIOA0 SPI_SCK
GPIOA1 SPI_CS
GPIOA2 SPI_MISO
GPIOA3 SPI_MOSI
GPIOA5 KEY
GPIOA6 RX
GPIOA7 TX
GPIOA8 LED_B
GPIOA9 LED_R
GPIOB1 LED_G
GPIOB2 SRST
SPI_MOSI TDI
SPI_MISO TDO
SPI_SCK TCK
SPI_CS TMS
KEY VL_KEY
5V VL_5V
TDI VL_TDI
TMS VL_TMS
TCK VL_TCK
SRST VL_SRST
TDO VL_TDO
TX VL_TX
RX VL_RX
2x5_2.54.1001
C1005 10uF
C1008 1uF
C1009 10uF
C1010 10uF
C1011 NC
C1012 1uF
C1013 1uF
C1002 NC
C1003 4.3pF
C1006 4.3pF
C1007 1uF
L1003 0R
L1004 4.7uH,MPL2012S4R7MHT
L1001 0R
AE1001 Antenna_Shield
U1001
AIC8800FC
RF_IND
V_CORE
VIO
FLS_IO0
FLS_CLK
FLS_IO3
FLS_IO2
FLS_IO1
XTAL1
XTAL2
AVDD18
USB_DM
USB_DP
FLS_CS
Y1001
26M, 10PPM
R1003 47k
POWER_SYS
POWER_KEY
V_FLS
U1002
P25Q80H/P25Q64H/P25Q128HA
CS
CLK
VCC
DI(IO0)
DO(IO1)
IO2
IO3
EP

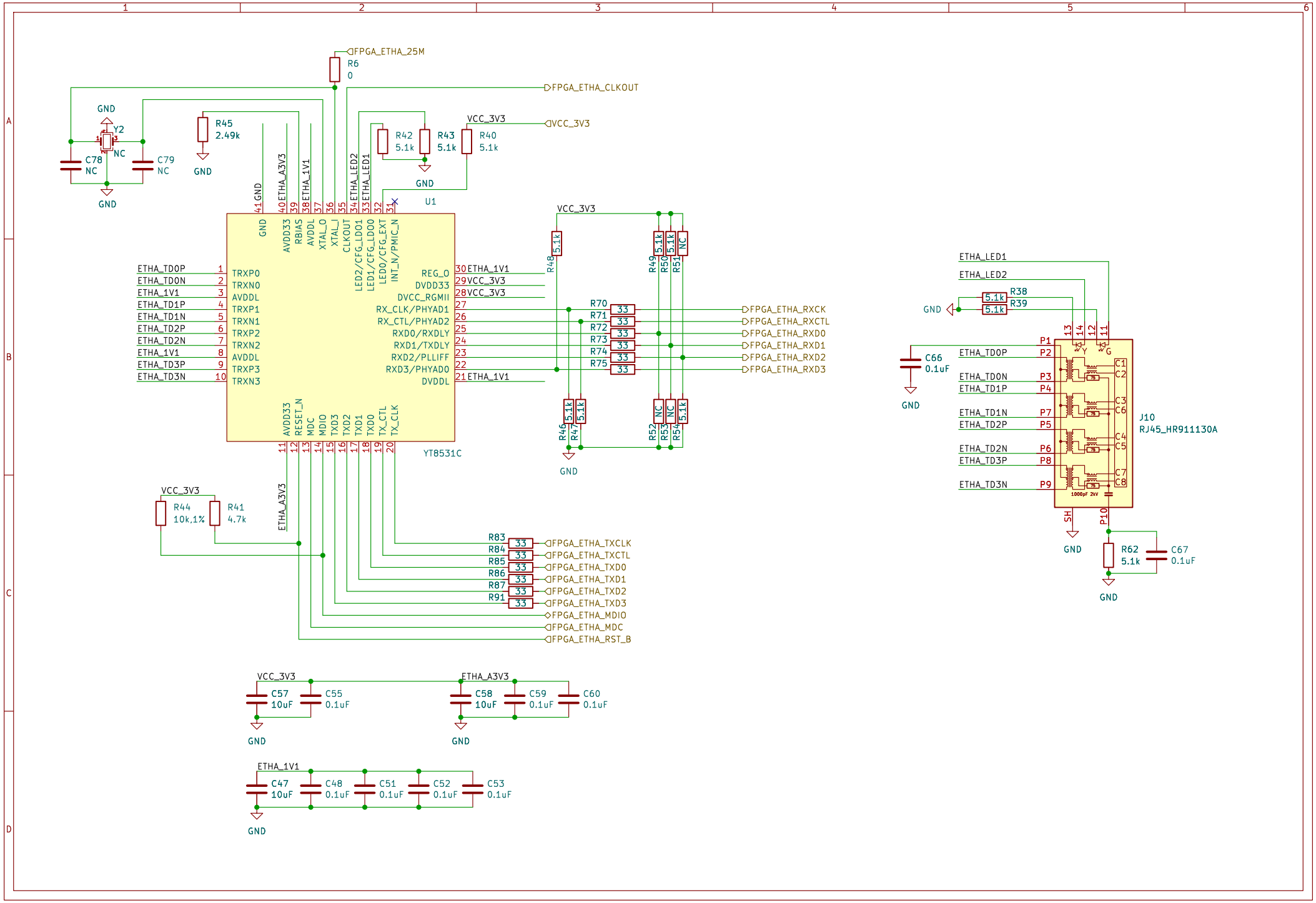
FPGA_ETHA_25M
R6
0
FPGA_ETHA_CLKOUT
GND
Y2
NC
C78
NC
C79
NC
R45
2.49k
VCC_3V3
R42
5.1k
R43
5.1k
R40
5.1k
U1
YT8531C
ETHA_TD0P
ETHA_TD0N
ETHA_1V1
ETHA_TD1P
ETHA_TD1N
ETHA_TD2P
ETHA_TD2N
ETHA_1V1
ETHA_TD3P
ETHA_TD3N
TRXP0
TRXN0
AVDDL
TRXP1
TRXN1
TRXP2
TRXN2
AVDDL
TRXP3
TRXN3
REG_O
DVDD33
DVCC_RGMII
RX_CLK/PHYAD1
RX_CTL/PHYAD2
RXD0/RXDLY
RXD1/TXDLY
RXD2/PLLIFF
RXD3/PHYAD0
DVDDL
ETHA_1V1
VCC_3V3
VCC_3V3
ETHA_1V1
R48
5.1k
R49
5.1k
R50
5.1k
R51
NC
R70
33
R71
33
R72
33
R73
33
R74
33
R75
33
FPGA_ETHA_RXCK
FPGA_ETHA_RXCTL
FPGA_ETHA_RXD0
FPGA_ETHA_RXD1
FPGA_ETHA_RXD2
FPGA_ETHA_RXD3
R46
5.1k
R47
5.1k
R52
NC
R53
NC
R54
5.1k
GND
VCC_3V3
R44
10k,1%
R41
4.7k
ETHA_A3V3
R83
33
R84
33
R85
33
R86
33
R87
33
R91
33
FPGA_ETHA_TXCLK
FPGA_ETHA_TXCTL
FPGA_ETHA_TXD0
FPGA_ETHA_TXD1
FPGA_ETHA_TXD2
FPGA_ETHA_TXD3
FPGA_ETHA_MDIO
FPGA_ETHA_MDC
FPGA_ETHA_RST_B
ETHA_LED1
ETHA_LED2
R38
5.1k
R39
5.1k
GND
C66
0.1uF
ETHA_TD0P
ETHA_TD0N
ETHA_TD1P
ETHA_TD1N
ETHA_TD2P
ETHA_TD2N
ETHA_TD3P
ETHA_TD3N
J10
RJ45_HR911130A
SH
P10
R62
5.1k
C67
0.1uF
VCC_3V3
C57
10uF
C55
0.1uF
ETHA_A3V3
C58
10uF
C59
0.1uF
C60
0.1uF
ETHA_1V1
C47
10uF
C48
0.1uF
C51
0.1uF
C52
0.1uF
C53
0.1uF

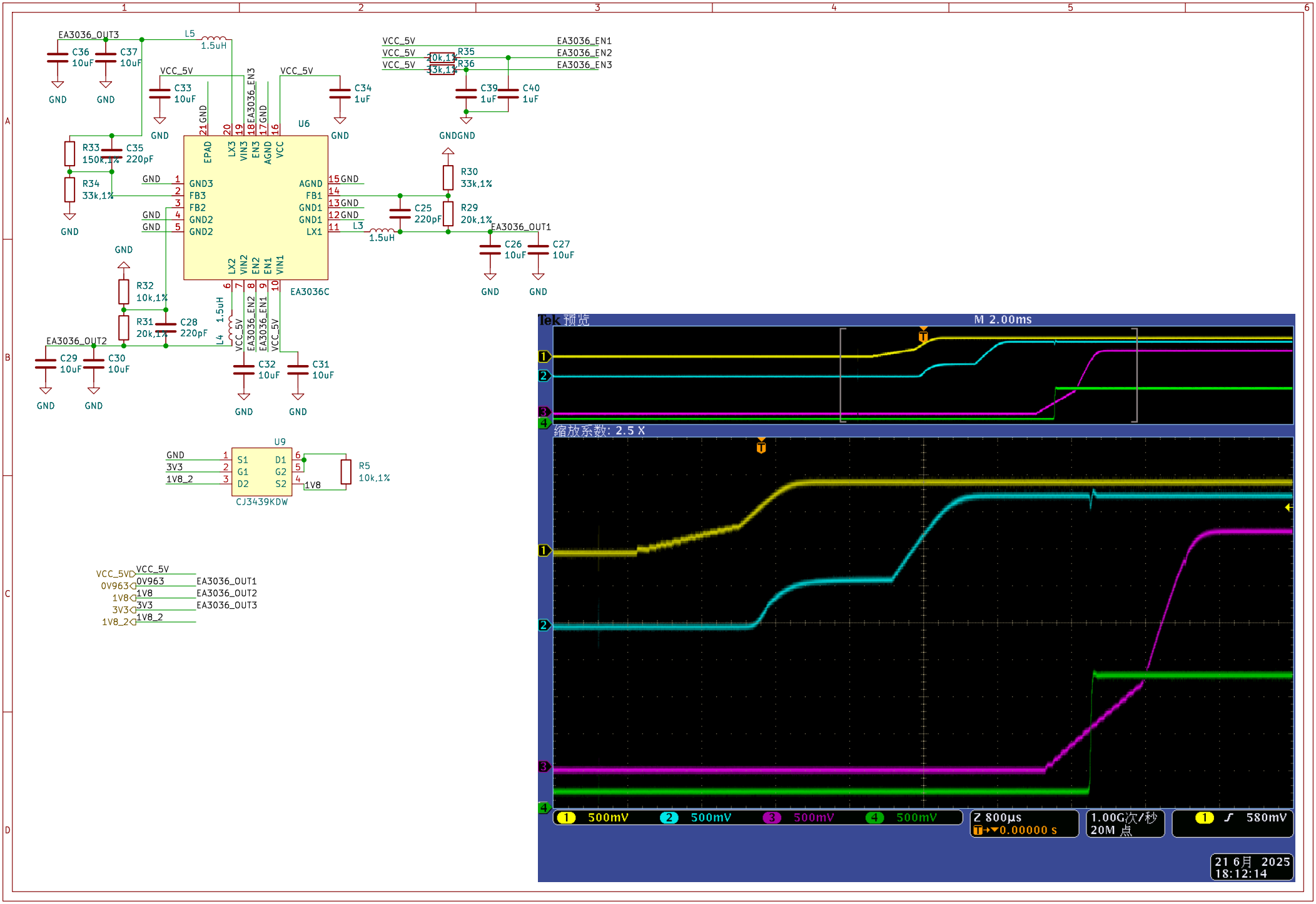
EA3036_OUT3
L5
1.5uH
C36 10uF
C37 10uF
GND
VCC_5V
C33 10uF
C34 1uF
U6
EA3036C
EPAD
GND3
FB3
FB2
GND2
GND2
AGND
FB1
GND1
GND1
LX1
LX3
VIN3
EN3
VCC
LX2
VIN2
EN2
EN1
VIN1
EA3036_EN3
EA3036_EN1
EA3036_EN2
R33 150k,1%
C35 220pF
R34 33k,1%
R32 10k,1%
R31 20k,1%
C28 220pF
L4 1.5uH
EA3036_OUT2
C29 10uF
C30 10uF
C32 10uF
C31 10uF
R35 10k,1%
R36 33k,1%
EA3036_EN1
EA3036_EN2
EA3036_EN3
C39 1uF
C40 1uF
R30 33k,1%
R29 20k,1%
C25 220pF
L3 1.5uH
EA3036_OUT1
C26 10uF
C27 10uF
U9
CJ3439KDW
S1
G1
D2
D1
G2
S2
3V3
1V8_2
1V8
R5 10k,1%
VCC_5VD
0V963
Tek 预览
M 2.00ms
缩放系数: 2.5 X
500mV
Z 800µs
0.00000 s
1.00G次/秒
20M 点
580mV
21 6月 2025
18:12:14