Open-Source Hardware: a new opportunity

Maurizio Martina
PoliTo IEEE Student Branch Counselor

Politecnico di Torino

Intro

HARDWARE **ACCELERATORS**

DIFFERENT **APPLICATIONS**

An **accelerator** is **useless** by itself

An easily extensible **system** should **host** it

Open source

Silicon validated

Free to use and **modify**

Realistic conditions **performance** evaluation

System-accelerator interaction evaluation

No need for **complex testing** environment to validate **silicon prototypes**

Write **C code** to **interact** with the **accelerator**

Open RISC-V platforms

- Parallel Ultra Low Power (PULP) by ETH Zürich and University of Bologna

Open RISC-V platforms

- Parallel Ultra Low Power (PULP) by ETH Zürich and University of Bologna

- The **PULP team** today is actively maintaining **308 repositories** on **github**.
- All the hardware is released under the permissive **Solderpad License** and the software under the **Apache 2.0 License**.
- The **open source IPs** maintained by **PULP team** represent a **solid pool of high quality IPs**.
- Most of the IPs and platforms are **silicon validated**.
- Some of them are today **verified at industrial level**.

Open RISC-V platforms

- Parallel Ultra Low Power (PULP) by ETH Zürich and University of Bologna

- OpenHW Foundation brings together hardware and software designers to create open source core designs and related IP, tools, and software with the aim for commercial and academic usage alike.

Open RISC-V platforms

- Parallel Ultra Low Power (PULP) by ETH Zürich and University of Bologna

- OpenHW Foundation brings together hardware and software designers to create open source core designs and related IP, tools, and software with the aim for commercial and academic usage alike.

Open Bus Interface standard
OBI

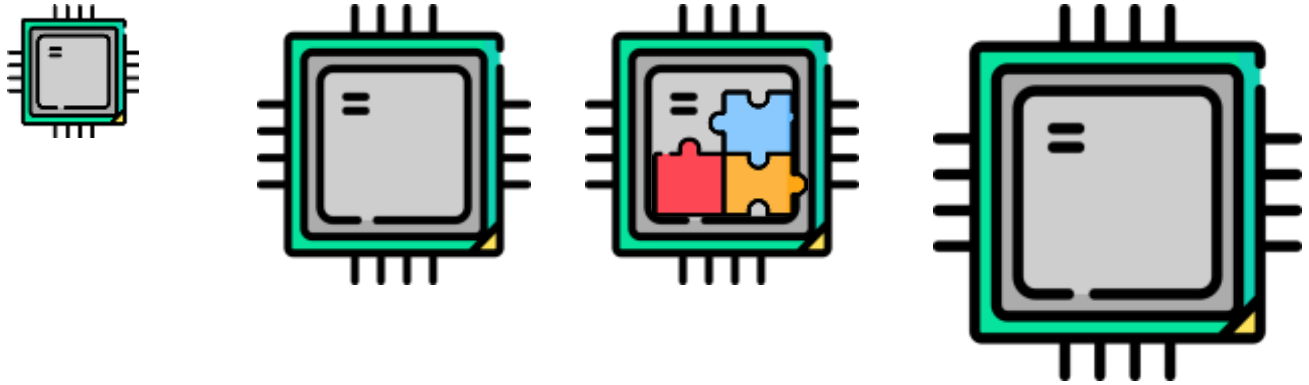

Core-V eXtension interface
CV-X-IF

CVE2
tiny core

CV32E40P
DSP core

CV32E40X
extensible core

CVA6
application class processor

OPENHW®

Open RISC-V platforms

- Parallel Ultra Low Power (PULP) by ETH Zürich and University of Bologna

- OpenHW Foundation brings together hardware and software designers to create open source core designs and related IP, tools, and software with the aim for commercial and academic usage alike.

- … but do not reinvent the wheel !

X-HEEP

X-HEEP is a **modular RISC-V 32 bit microcontroller** template:

- **Highly configurable**
- **Easily extensible**
- **Open source**

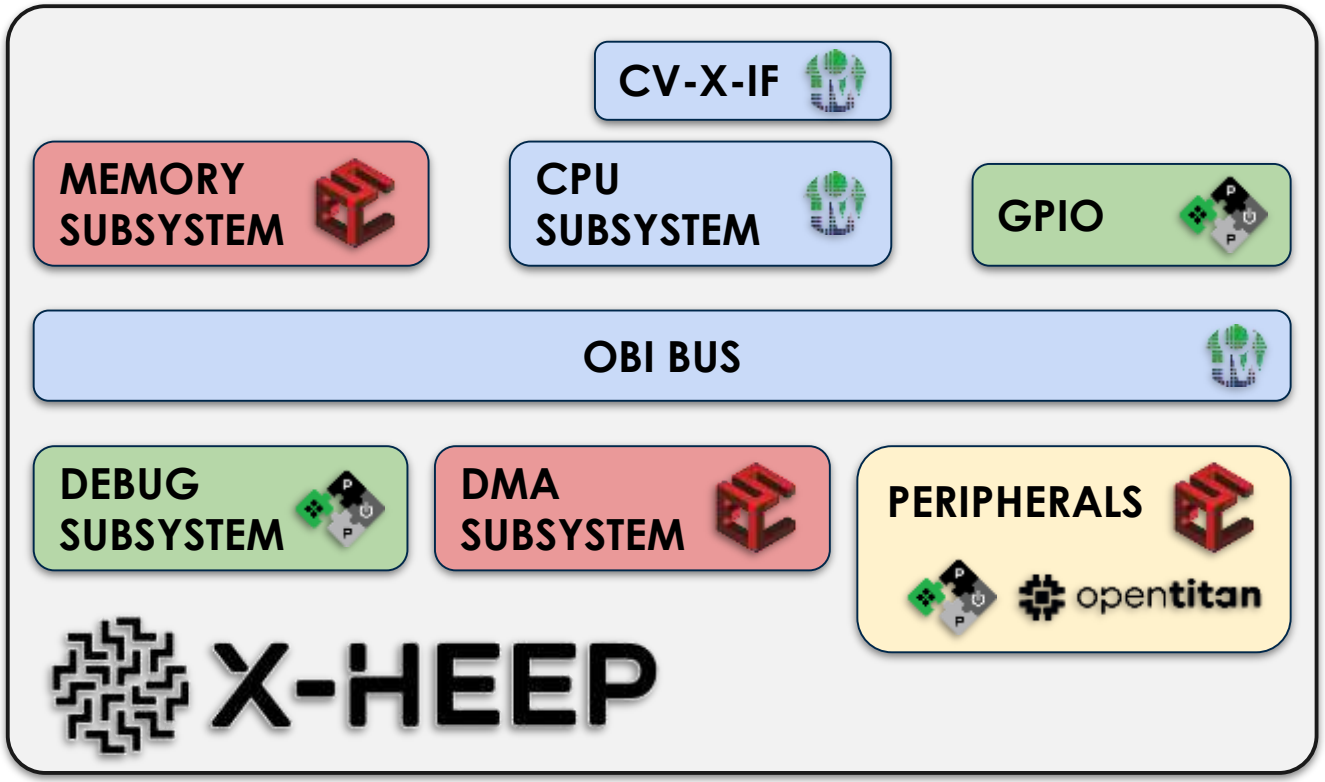

X-HEEP

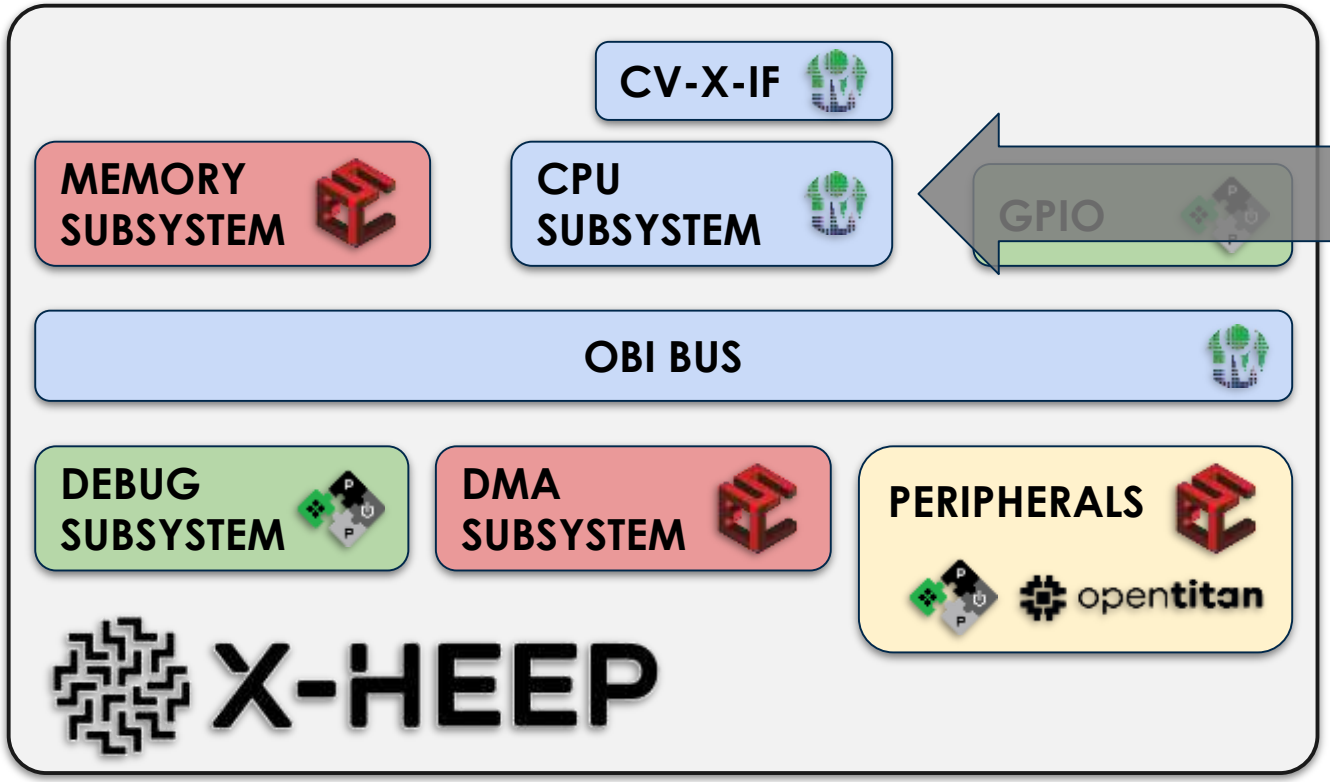

Different **cores** can be selected

CV32E40P

CV32E40X

CVE2

Core's specific features can be enabled at system level

CORE-V extension interface

Floating point unit

PULP extensions

X-HEEP

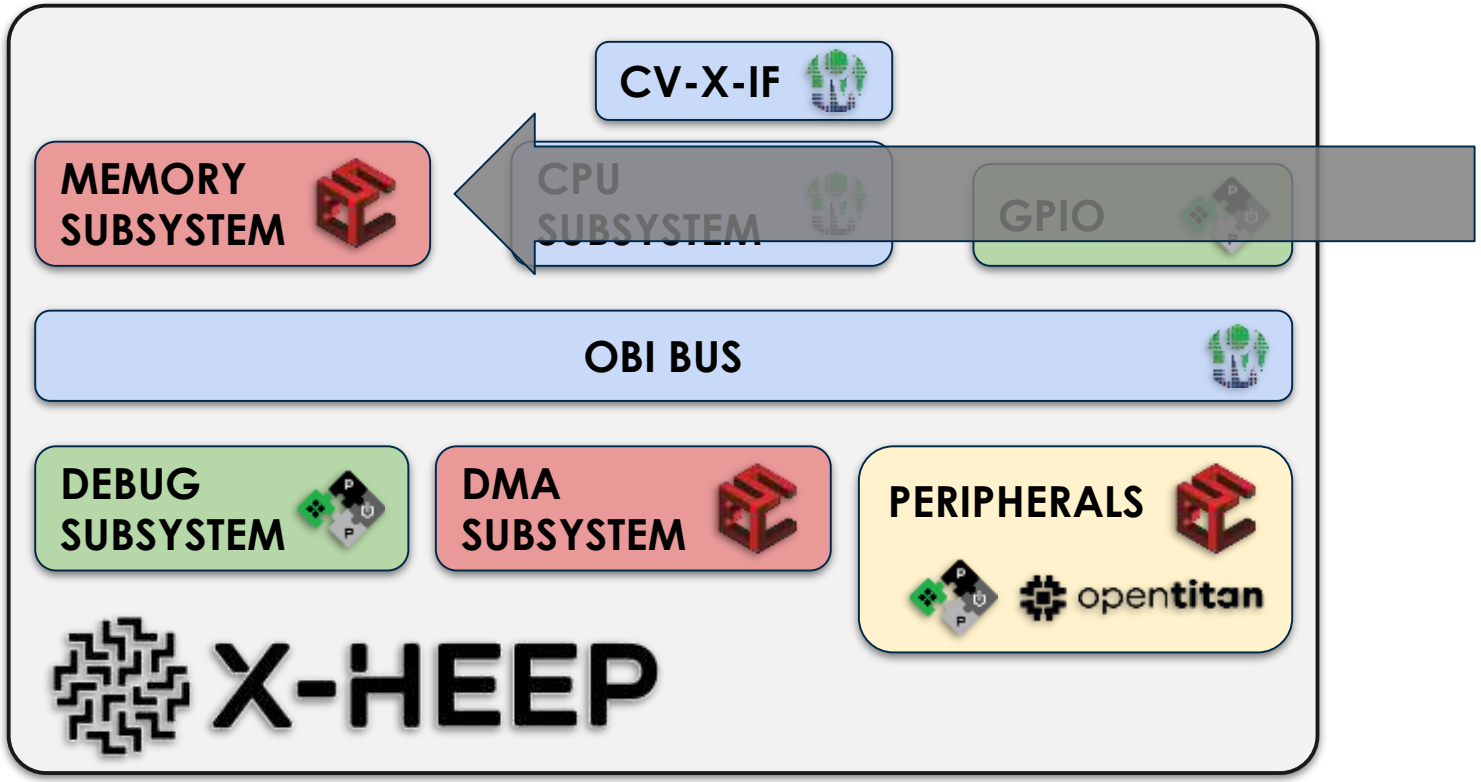

The **number of memory banks and their sizes** can be configured. As the possibility to have **data interleaved** or **contiguous**.

These information is directly propagated to the **linker script** for **seamless software integration**.

X-HEEP

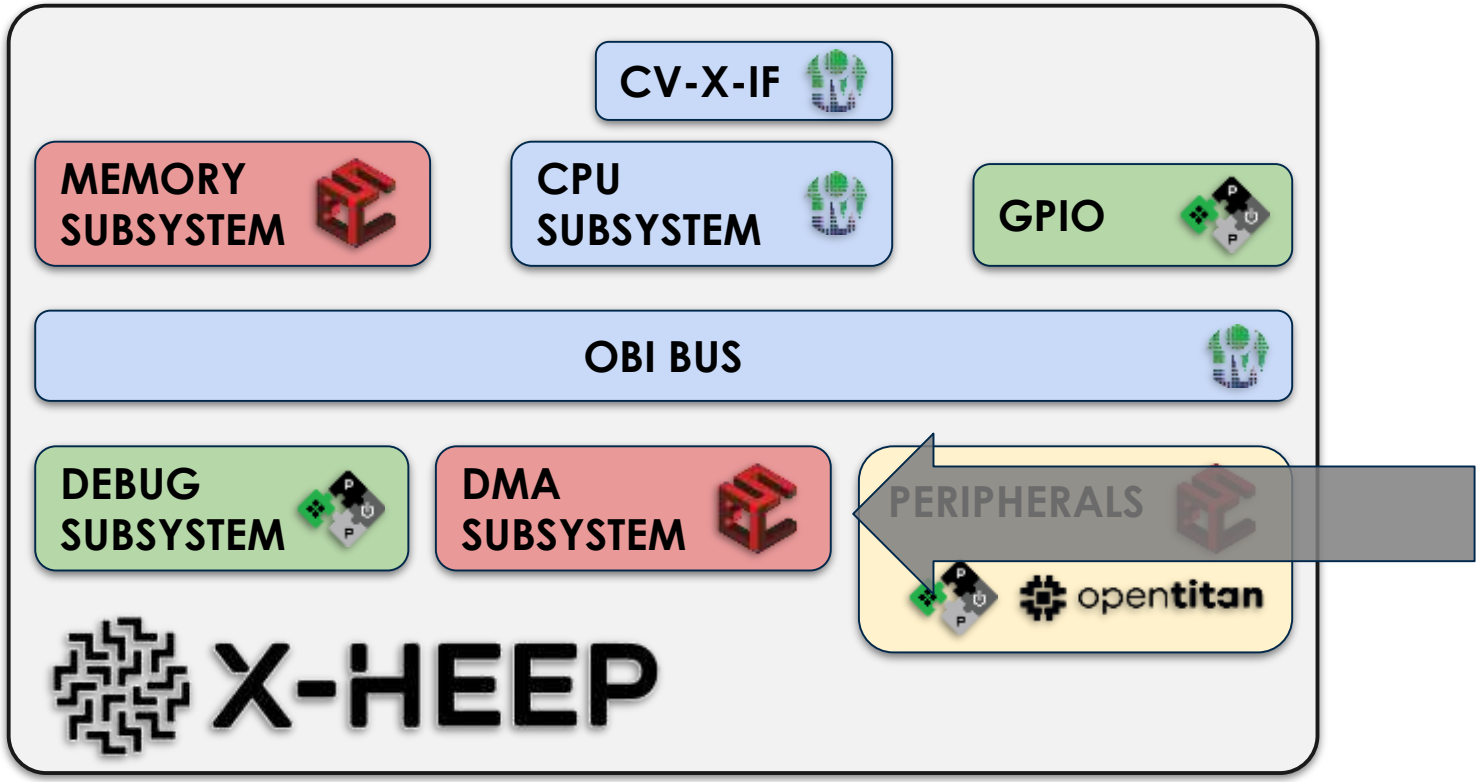

The **number of DMA channels** can be configured.
The **number of master ports** on the system bus can be configured independently on the number of channels (**more channels can share the same master port**).

X-HEEP

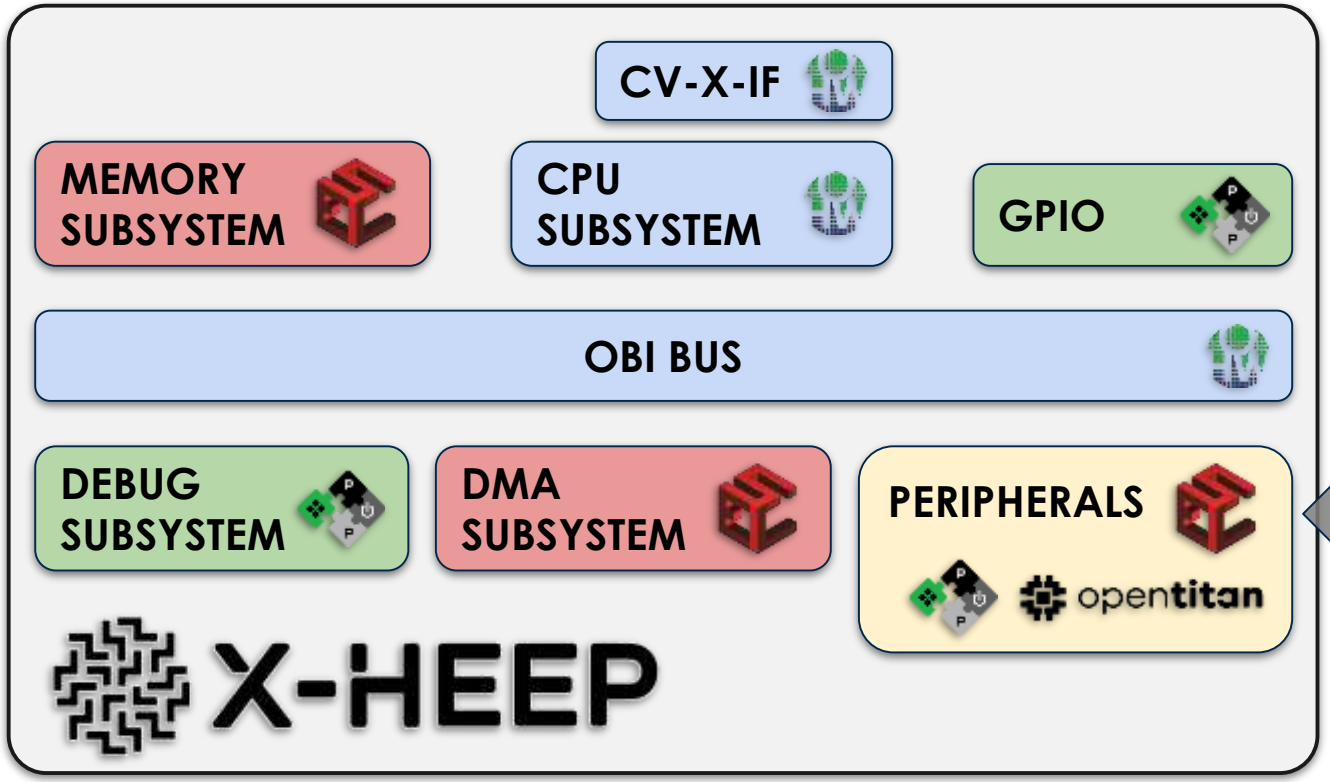

Many peripherals can be **selected** and **configured** depending on the application requirements

Extending X-HEEP

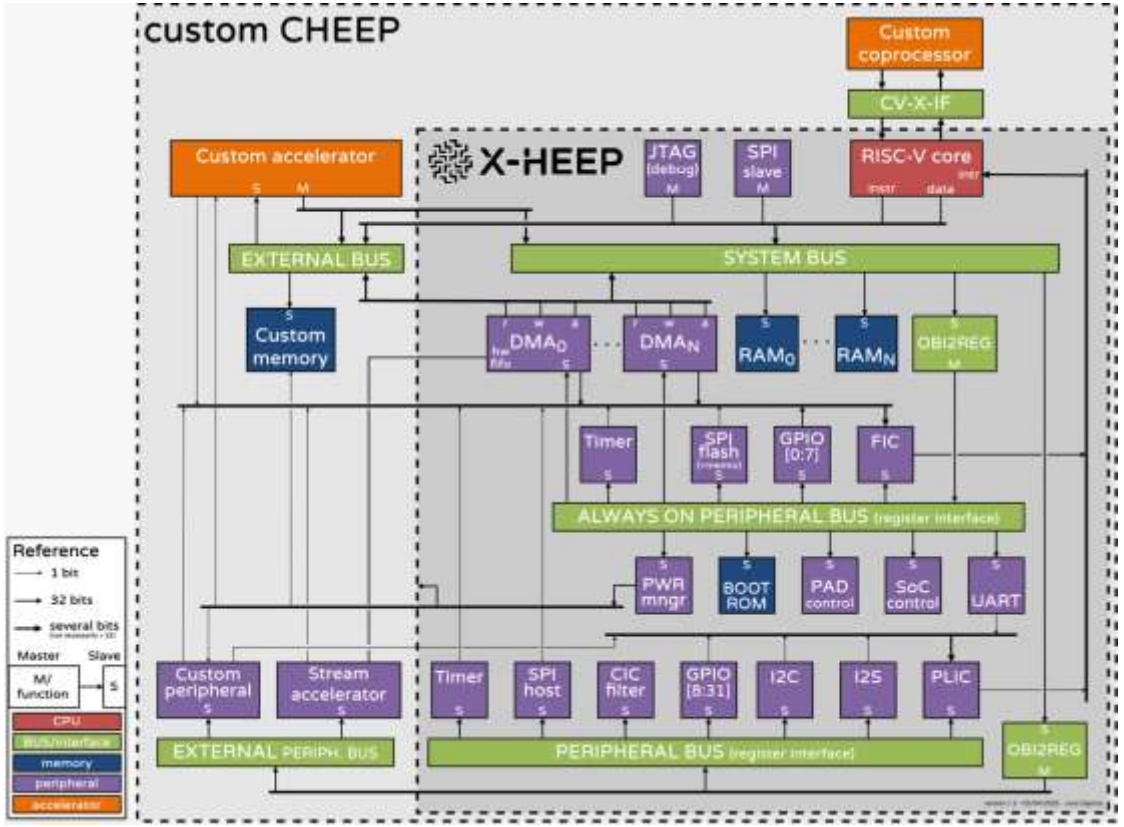

X-HEEP, being easily extensible and configurable, is a good **host system** to accommodate the execution of tasks on **tightly coupled accelerators**.

In fact, the designer interested in using X-HEEP has just to **instantiate it with their design and connect them**.

Examples

X-TRELA (UPM)

- STReaming ELAstic CGRA
- High throughput while low power
- Dataflow computation
- Public release on Github

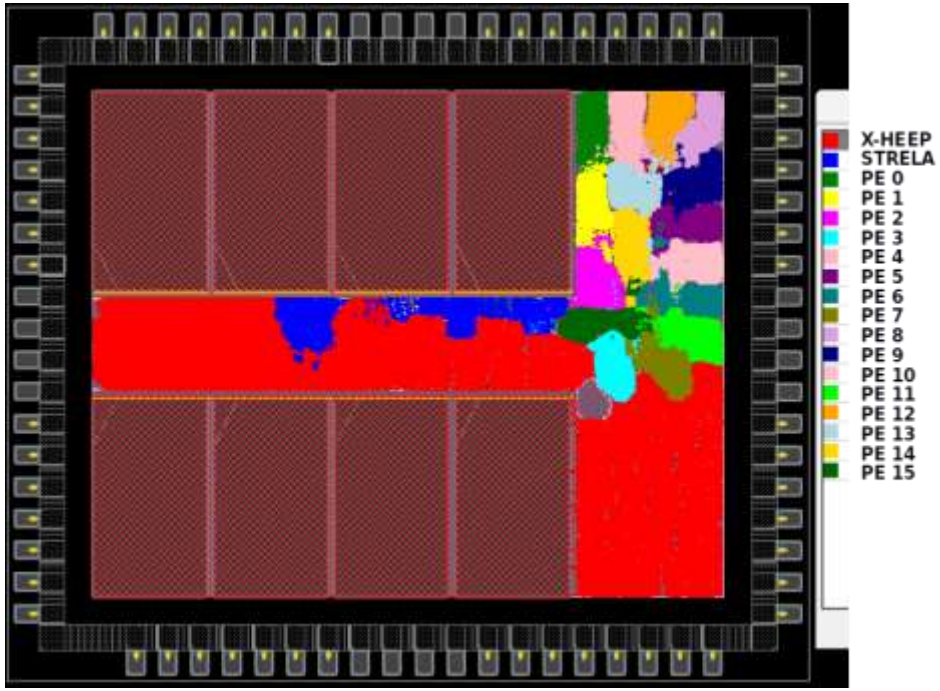

PolHEEPo (PoliTo)

- CGRA (Rogue)
- Post Quantum Cryptography (PQC) Accelerators (Keccak, Ascon, PUFfo)

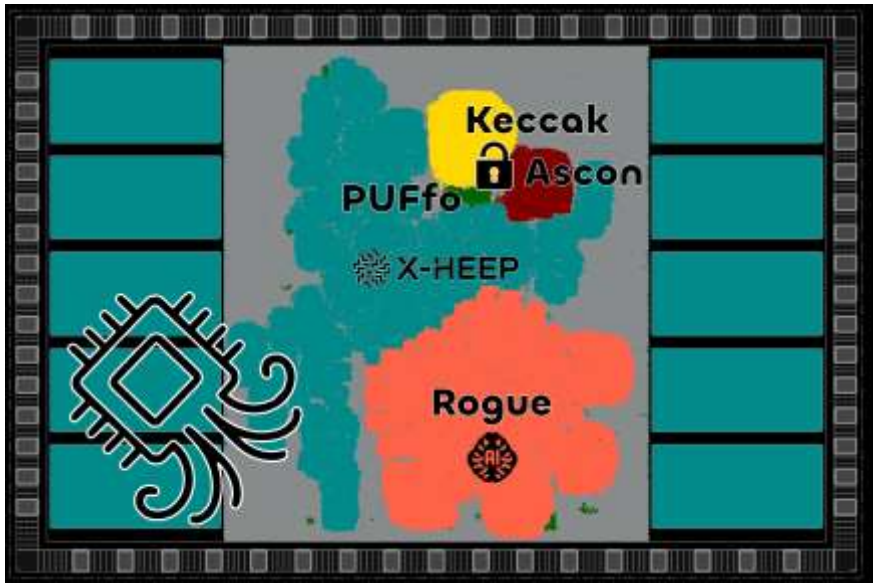

Published papers

- Petrolo, V., Guella, F., Caon, M., Schiavone, P. D., Masera, G., & Martina, M. (2025). ARCANE: Adaptive RISC-V Cache Architecture for Near-memory Extensions. *arXiv preprint arXiv:2504.02533*.
- Caon, M., Petrolo, V., Mirigaldi, M., Guella, F., Masera, G., & Martina, M. (2024, May). Seeing Beyond the Order: A LEN5 to Sharpen Edge Microprocessors with Dynamic Scheduling. In *Proceedings of the 21st ACM International Conference on Computing Frontiers: Workshops and Special Sessions* (pp. 47-50).
- Alessandra Dolmeta, Emanuele Valpreda, Maurizio Martina, and Guido Masera. 2024. Implementation and integration of NTT/INTT accelerator on RISC-V for CRYSTALS-Kyber. In Proceedings of the 21st ACM International Conference on Computing Frontiers: Workshops and Special Sessions (CF '24 Companion). Association for Computing Machinery, New York, NY, USA, 59–62. https://doi.org/10.1145/3637543.3652872
- A. Dolmeta, M. Martina and G. Masera, "ATHOS: A Hybrid Accelerator for PQC CRYSTALS-Algorithms exploiting new CV-X-IF Interface," in IEEE Access, doi: 10.1109/ACCESS.2024.3511340.
- Piscopo, V.; Dolmeta, A.; Mirigaldi, M.; Martina, M.; Masera, G. A High-Entropy True Random Number Generator with Keccak Conditioning for FPGA. Sensors 2025, 25, 1678. https://doi.org/10.3390/s25061678
- Dolmeta, A., Martina, M., Masera, G. (2025). Exploring the New CV-X-IF Interface to Customize RISC-V Instruction Sets: A Case of Study in Cryptography. In: Ruo Roch, M., Bellotti, F., Berta, R., Martina, M., Motto Ros, P. (eds) Applications in Electronics Pervading Industry, Environment and Society. ApplePies 2024. Lecture Notes in Electrical Engineering, vol 1369. Springer, Cham. https://doi.org/10.1007/978-3-031-84100-2_5
- Mirigaldi, M., Martina, M., Masera, G. (2025). Performance Comparison: Software vs. Hardware Implementation of Novel S-Box Designed to Resist Power Analysis Attack. In: Ruo Roch, M., Bellotti, F., Berta, R., Martina, M., Motto Ros, P. (eds) Applications in Electronics Pervading Industry, Environment and Society. ApplePies 2024. Lecture Notes in Electrical Engineering, vol 1369. Springer, Cham. https://doi.org/10.1007/978-3-031-84100-2_3
- Alessandro Varaldi, Alessio Naclerio, Fabrizio Riente, Maurizio Zamboni, Mariagrazia Graziano, Marco Vacca. Optimizing TCN Inference: A Hardware-Software Co-Design Approach with CGRA Acceleration, to appear at ISVLSI 2025
- Alessio Naclerio, Fabrizio Riente, Giovanna Turvani, Marco Vacca, Maurizio Zamboni, Mariagrazia Graziano. Mage: A Decoupled Access-Execute CGRA Tailored for Static Control Applications, appeared at ISCAS 2025
- Luigi Giuffrida, Guido Masera and Maurizio Martina. TOXOS: Spinning Up Nonlinearty in AI with a RISC-V CORDIC Coprocessor, under review

Conclusions

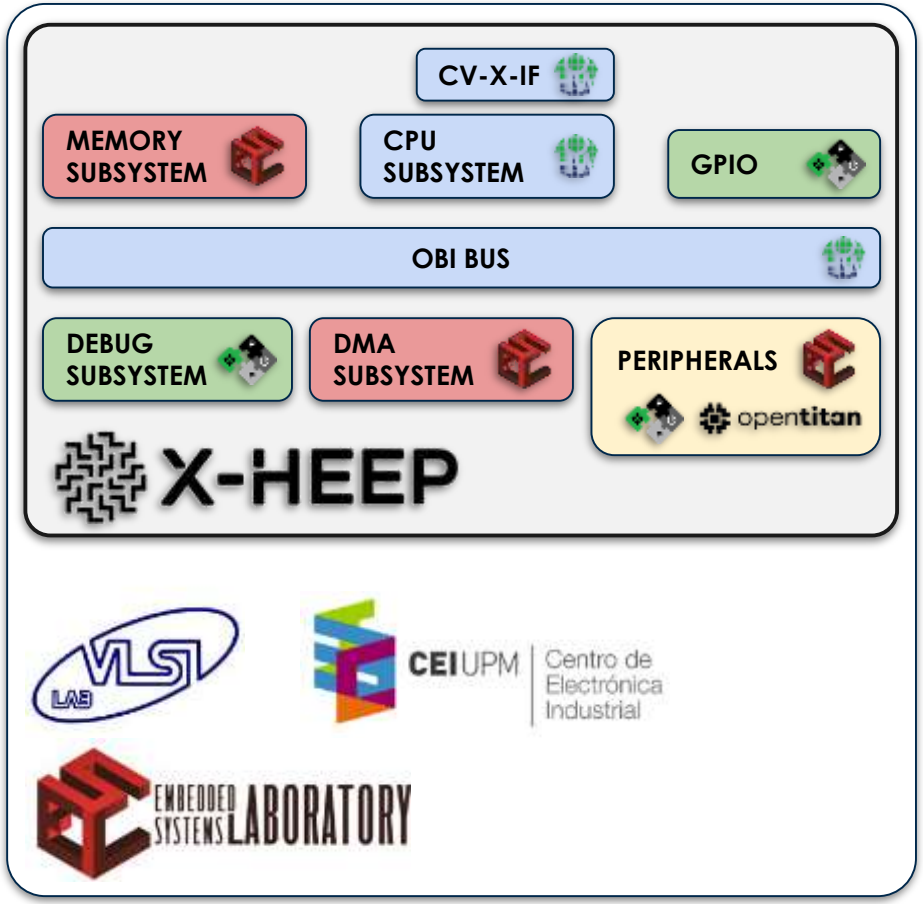

The availability of **high quality** and **verified open source hardware** enabled the possibility to build **X-HEEP**.

Such a platform **enabled** the possibility to unlock **new research possibilities** in many research groups.

This kind of virtuous experience is letting many **universities** to **join the silicon path lowering the barrier** to it.

The Power of Open-Source Hardware: a user experience point of view

Thank you for your attention!

Politecnico di Torino