Introduction to programming

Wednesday, July 23, 2025 10:11 PM

Python as a Language

Python: A Computer Language

-We need to learn the Python language so we can communicate(giao tiếp) our instructions (hướng dẫn) to Python. In the beginning we will make lots of mistakes (những sai lầm)
-When you make a mistake, the computer does not think you are "cute". It says "syntax error"(lỗi cú pháp) - given that it "knows" the language and you are just learning it.
-You must remember that you are intelligent (thông minh) and can learn - the computer is simple and very fast - but cannot learn - so it is easier for you to learn Python than for the computer to learn English...

Talking to Python : The Interpreter (Trình Thông Dịch)
Ssex
Elements (các yếu tố) of Python
-Vocabulary / Words - Variables (Biến số)and Reserved words (Từ khóa đã được định sẵn) (Chapter 2)
-Sentence structure (cấu trúc) - valid syntax patterns (các mẫu cú pháp hợp lệ) (Chapters 3-5)
-Story structure - constructing a program for a purpose (mục đích)

Reserved Words

- You can not use reserved words as variable names / identifiers (định danh)
  and del for is raise assert elif from lambda return break else global not try class except if or while continue exec import pass yield def finally in print

del

- Dùng để **xóa biến, phần tử của danh sách, hoặc thuộc tính** của đối tượng.

python Copy Edit

```python
a = [1, 2, 3]
del a[1]  # Xóa phần tử thứ 2 => a = [1, 3]
```

elif

- Viết tắt của **else if**, dùng trong cấu trúc điều kiện.

python Copy Edit

```python
x = 10
if x > 0:
    print("Dương")
elif x == 0:
    print("Không")
else:
    print("Âm")
```

lambda

- Dùng để tạo **hàm ẩn danh** (anonymous function).

python Copy Edit

```python
f = lambda x: x**2
print(f(3))  # Kết quả: 9
```

exec

- Dùng để **thực thi chuỗi lệnh Python động** (ít dùng, cần cẩn thận vì có thể gây lỗi bảo mật).

python Copy Edit

```python
code = "print('Hello')"
exec(code)  # In ra: Hello
```

Statements (CÂU LỆNH)

x = 2	Assignment Statement
x = x + 2	Assignment with expression
print(x)	Print statement

PYTHON

Wednesday, July 23, 2025 10:16 PM

Biểu thức điều kiện

Saturday, August 2, 2025 9:37 AM

47 (V_{SS}) > 48 (V_{DD})

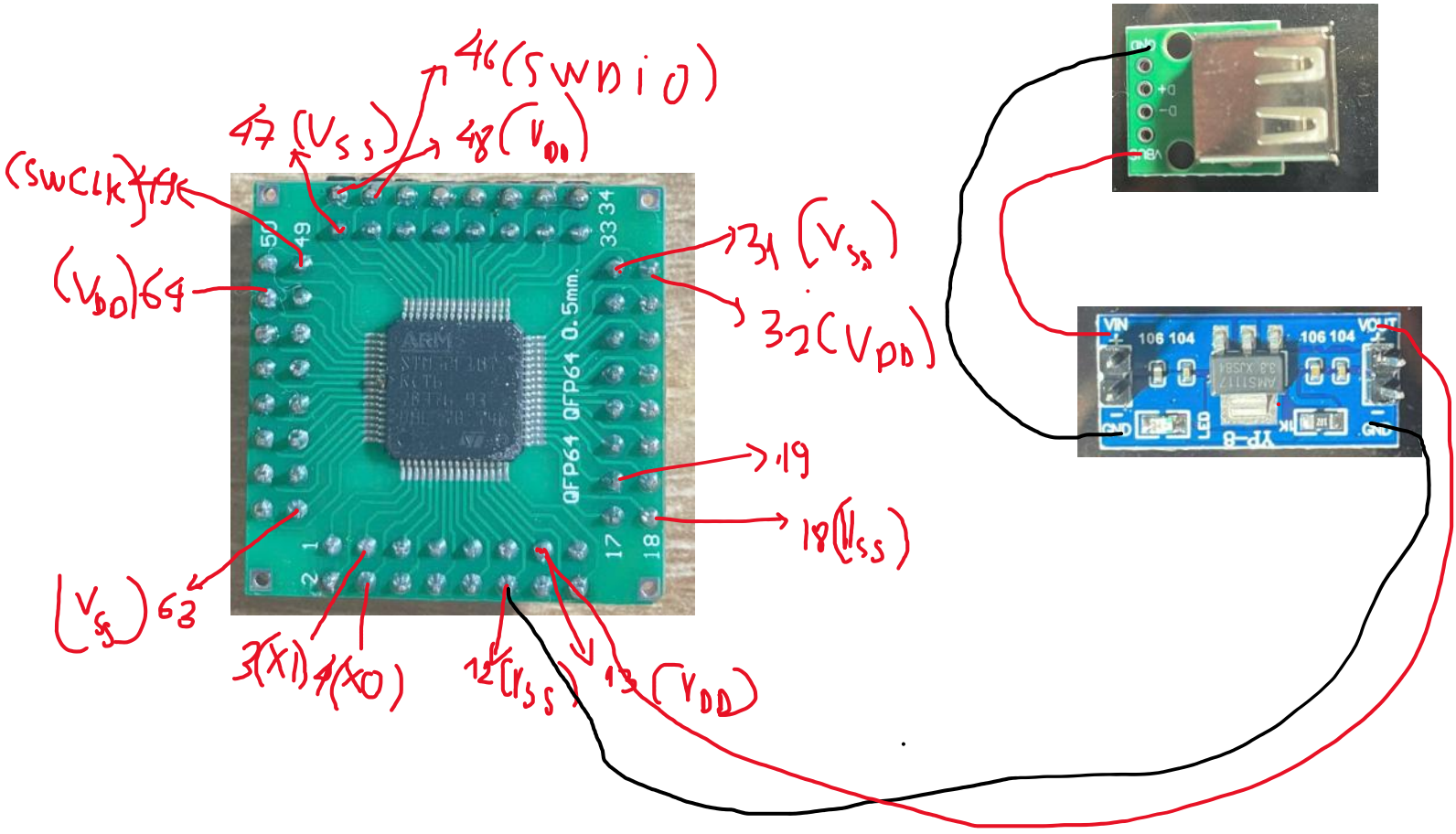
46 (SWDIO)
47 (V_{SS})
48 (V_{DD})
(SWCLK) 49
(V_{DD}) 64
31 (V_{SS})
32 (V_{DD})
19
18 (V_{SS})
(V_{SS}) 63
3 (XI) 4 (XO)
12 (V_{SS})
13 (V_{DD})
QFP64 QFP64 0.5mm.
VIN
VOUT
106 104
106 104
AMS1117
3.3 XJ581
YP-8
LED
GND

INPUT

Wednesday, April 8, 2026 9:25 PM

Figure 15. Input floating/pull up/pull down configurations

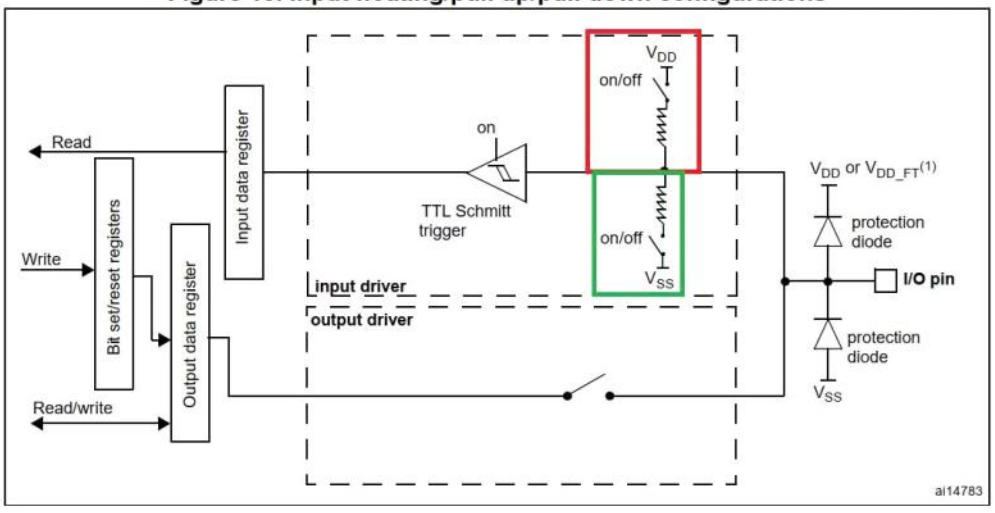

Pull up
Pull down
Floating

PIC16F887

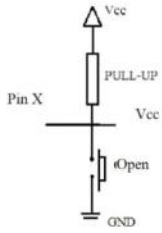

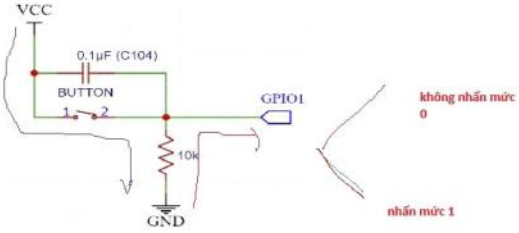

Vi điều khiển hđ :

- clock
- put mode
- reset
- power
- mạch nạp

OUTPUT

Wednesday, April 8, 2026 9:26 PM

Figure 16. Output configuration

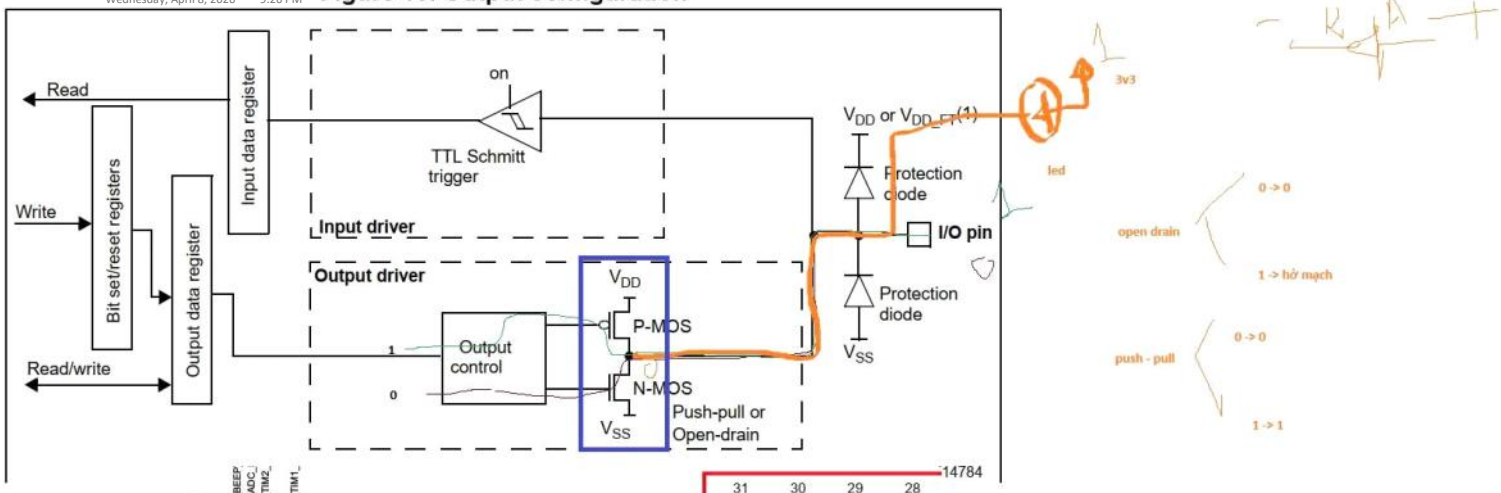

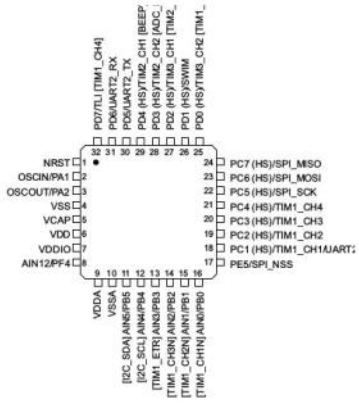

GPIO AFIO

PC7 /SPI_MISO

14784

31	30	29	28
CNF15[1:0]		MODE15[1:0]	
rw	rw	rw	rw

PORTA

15 8

0 7

1 CHÂN NHIỀU CHỨC NĂNG

GPIO0

CNF0[1:0]		MODE0[1:0]	
rw	rw	rw	rw

B1 : ENABLE CLOCK
B2: check thanh ghi GPIOx_CRL , GPIOx_CRH
b3 : check pull up/ pull dowm

0000000000000000	1 <<2
0000000000000001	dịch lần 0
0000000000000010	dịch lần 1
0000000000000100	dịch lần 2

ghi nhiều hơn 1 bit , e clear bit trước
=> sau đó mới ghi

```
GPIOx->CRL &= ~(0xf << (pin *4));
GPIOx->CRL |= ( mode<<2 | speed) << (pin *4);
```

clear

write

31	30	29	28	27	26	25	24	23	22	21	20	19	18	17	16
CNF7[1.0]		MODE7[1.0]		CNF6[1.0]		MODE6[1.0]		CNF5[1.0]		MODE5[1.0]		CNF4[1.0]		MODE4[1.0]	
rw	rw	rw	rw	rw	rw	rw	rw	rw	rw	rw	rw	rw	rw	rw	rw

15	14	13	12	11	10	9	8	7	6	5	4	3	2	1	0
CNF3[1.0]		MODE3[1.0]		CNF2[1.0]		MODE2[1.0]		CNF1[1.0]		MODE1[1.0]		CNF0[1.0]		MODE0[1.0]	
rw	rw	rw	rw	rw	rw	rw	rw	rw	rw	rw	rw	rw	rw	rw	rw

gpio0 -> pin0

cần clear 0000

4 bit

1010111110101010

0xf = 1111

101011111010|1111

(mode<<2 | speed) << 4; ứng vs pin = 1

BIT CNF

variable mode

BIT MODE

variable speed

gpio0 = mode << 2 | speed << pim * 4

9.2.2 Port configuration register high (GPIOx_CRH) (x=A..G)

Address offset: 0x04

Reset value: 0x4444 4444

8 pin cao từ 8 tới 15

31	30	29	28	27	26	25	24	23	22	21	20	19	18	17	16
CNF15[1:0]		MODE15[1:0]		CNF14[1:0]		MODE14[1:0]		CNF13[1:0]		MODE13[1:0]		CNF12[1:0]		MODE12[1:0]	
rw	rw	rw	rw	rw	rw	rw	rw	rw	rw	rw	rw	rw	rw	rw	rw
15	14	13	12	11	10	9	8	7	6	5	4	3	2	1	0
CNF11[1:0]		MODE11[1:0]		CNF10[1:0]		MODE10[1:0]		CNF9[1:0]		MODE9[1:0]		CNF8[1:0]		MODE8[1:0]	
rw	rw	rw	rw	rw	rw	rw	rw	rw	rw	rw	rw	rw	rw	rw	rw

Bits 31:30, 27:26 **CNFy[1:0]:** Port x configuration bits (y= 8 ... 15)

```
void GPIOx_Init(GPIO_TypeDef* GPIOx, uint8_t pin, uint8_t mode, uint8_t pull, uint8_t
speed)
{
  if (GPIOx == GPIOA)
      /* port A clock enable */
      RCC->APB2ENR |= 1<<2;
  else if (GPIOx == GPIOB)
      /* port B clock enable */
      RCC->APB2ENR |= 1<<3;
  else if (GPIOx == GPIOC)
      /* port C clock enable */
      RCC->APB2ENR |= 1<<4;
  else if (GPIOx == GPIOD)
      /* port D clock enable */
      RCC->APB2ENR |= 1<<5;
  else
      //do some thing

  if (pin >= 8)
      /* clear bit */
```

pmD

GPIOx->CRH &= ~(0xf << ((pin-8) *4));
GPIOx->CRH |= (mode<<2 | speed) << ((pin-8) *4);

/ pin 8

Quá trình pull từ git qua folder

Thursday, April 16, 2026 2:40 PM

Bước 1: Xác thực định dạng kho lưu trữ:

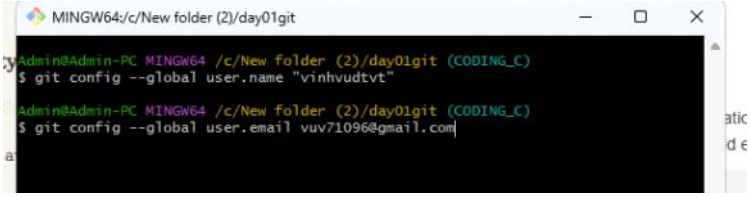

Tạo folder trống :

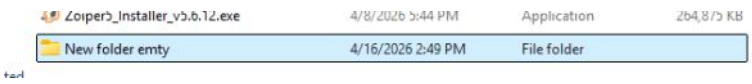

Bước 2 : Tạo repo

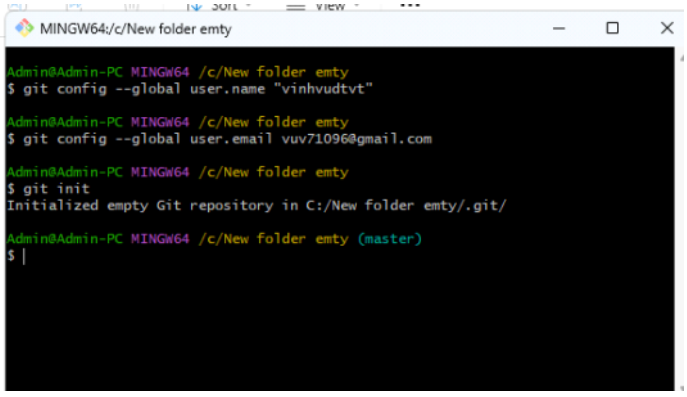

Bước 3 : clone từ repo về local

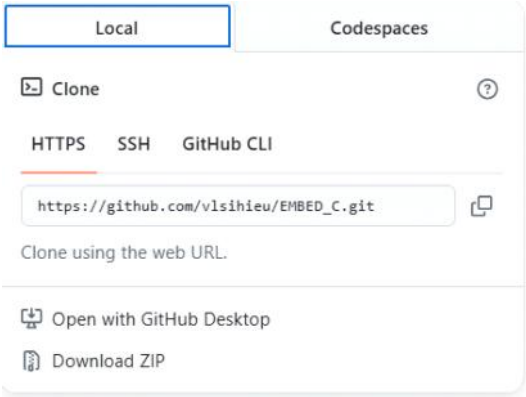

Sao chép

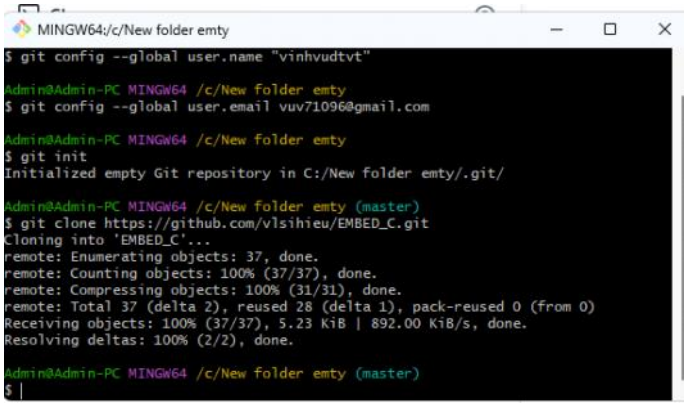

Đã clone về folder

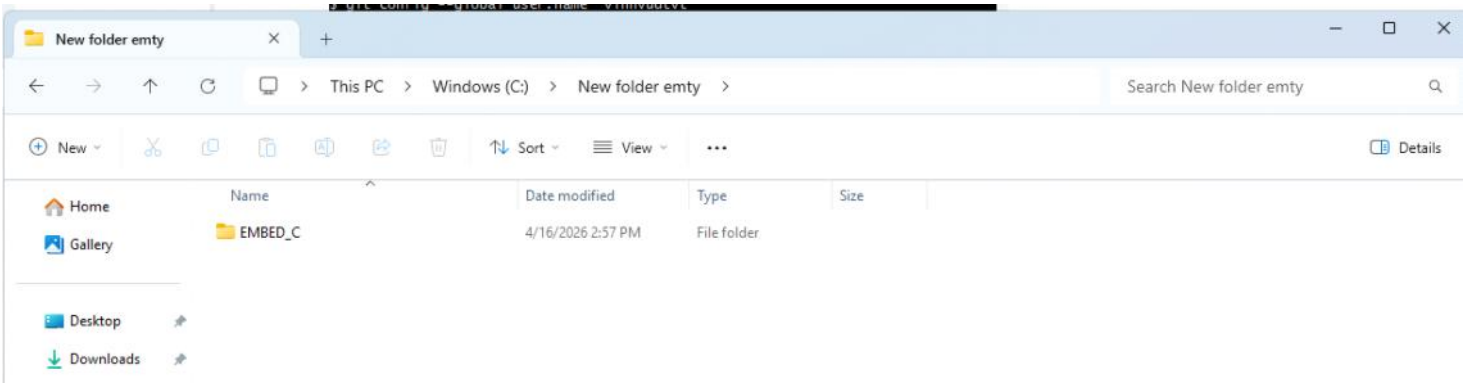

Bước 4: ktra repository bao nhiêu branch

Bước 5: switch qua branch

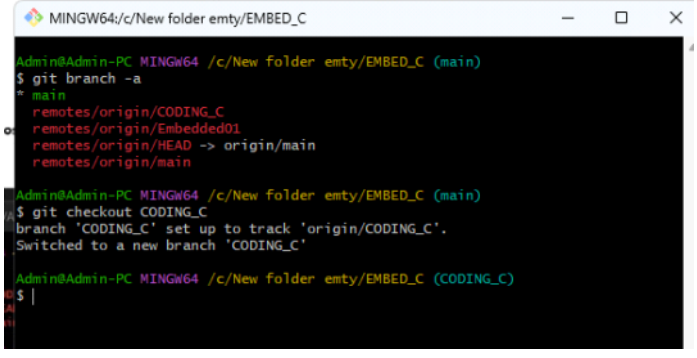

```
MINGW64:/c/New folder emty/EMBED_C
dmin@Admin-PC MINGW64 /c/New folder emty/EMBED_C (main)
$ git branch -a
* main
  remotes/origin/CODING_C
  remotes/origin/Embedded01
  remotes/origin/HEAD -> origin/main
  remotes/origin/main

dmin@Admin-PC MINGW64 /c/New folder emty/EMBED_C (main)
$ git checkout CODING_C
ranch 'CODING_C' set up to track 'origin/CODING_C'.
witched to a new branch 'CODING_C'

dmin@Admin-PC MINGW64 /c/New folder emty/EMBED_C (CODING_C)
$ git branch -a
* CODING_C
  main
  remotes/origin/CODING_C
  remotes/origin/Embedded01
  remotes/origin/HEAD -> origin/main
  remotes/origin/main

dmin@Admin-PC MINGW64 /c/New folder emty/EMBED_C (CODING_C)
```

Để con trỏ head tới branch CODING_C

```
Admin@Admin-PC MINGW64 /c/New folder emty/EMBED_C (CODING_C)
$ git status
On branch CODING_C
Your branch is up to date with 'origin/CODING_C'.

nothing to commit, working tree clean
```

Bước 6: pull reponsitory tại branch codingc về local

```
MINGW64:/c/New folder emty/EMBED_C/vinhday0-1
gi
Admin@Admin-PC MINGW64 /c/New folder emty/EMBED_C/vinhday0-1 (CODING_C)
$ git status
On branch CODING_C
Your branch is up to date with 'origin/CODING_C'.

Untracked files:
  (use "git add <file>..." to include in what will be committed)
        ./

nothing added to commit but untracked files present (use "git add" to track)

Admin@Admin-PC MINGW64 /c/New folder emty/EMBED_C/vinhday0-1 (CODING_C)
$
```