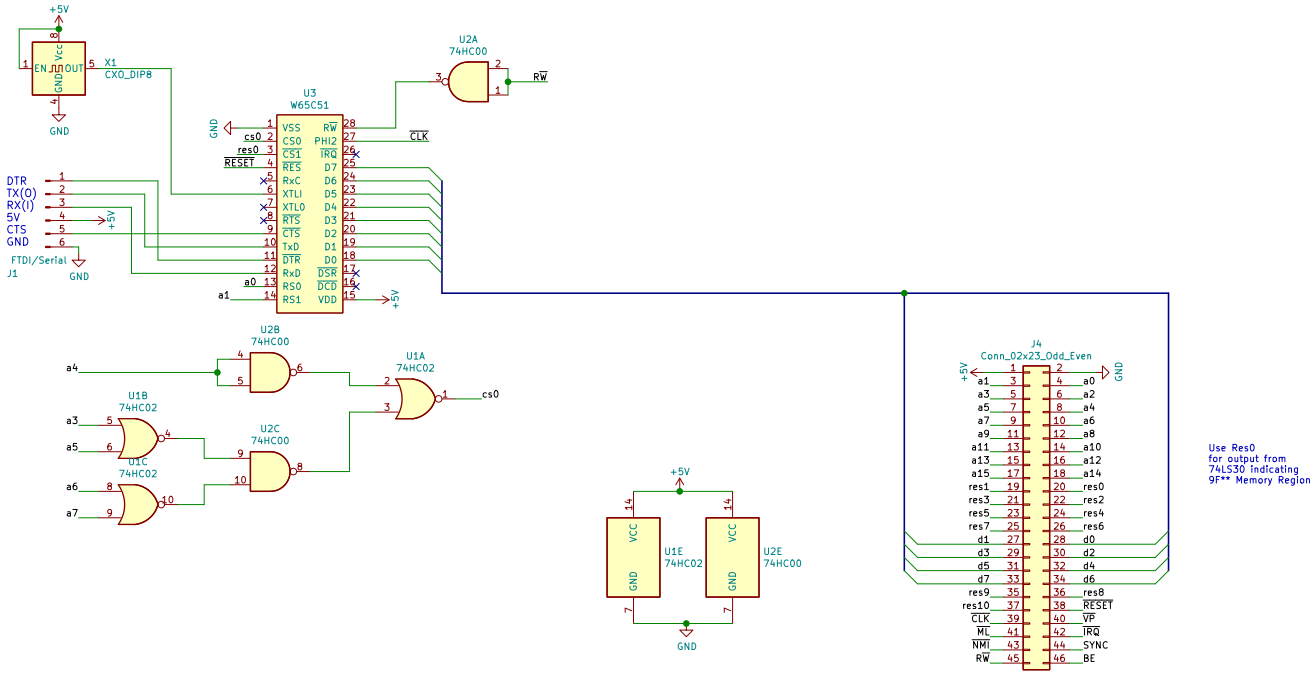

Sheet: /
File: SerialBoard.sch

Title:

Size: USLedger	Date:	**Rev: 0**
KiCad E.D.A. kicad 5.1.5+dfsg1-2build2		Id: 1/1