Basic Electronics

Tutorial 1

1. In the circuit shown below, calculate the power supplied by the voltage source.

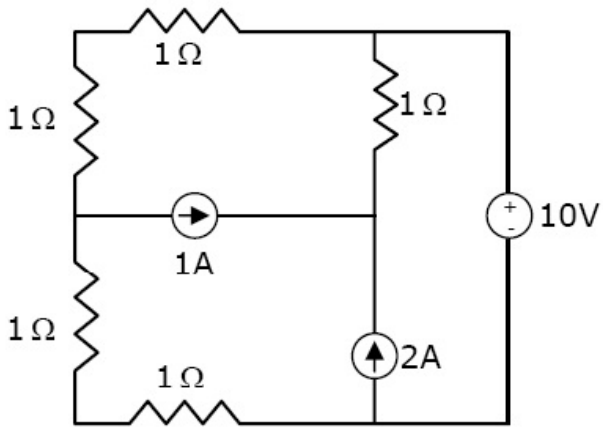

Figure 1:

2. In the circuit shown below, find current in voltage source and voltage across the current source.

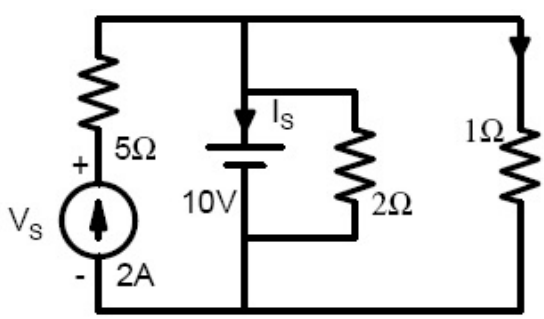

Figure 2:

3. Calculate the value of voltage source E in the circuit shown below.

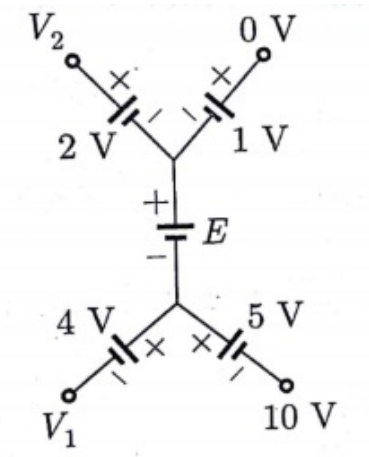

Figure 3:

4. In the figure shown below, power absorbed by the unknown elements are given.Calculate the current i_x in the circuit.

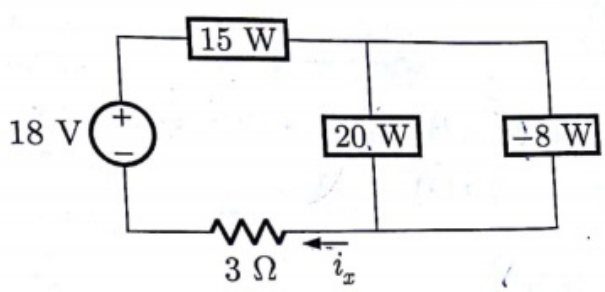

Figure 4:

5. The current i(t) in the conductor, with cross-sectional area S_o is shown in figure. Calculate the charge transported through its cross-section during the interval $0 \leq t \leq 6$

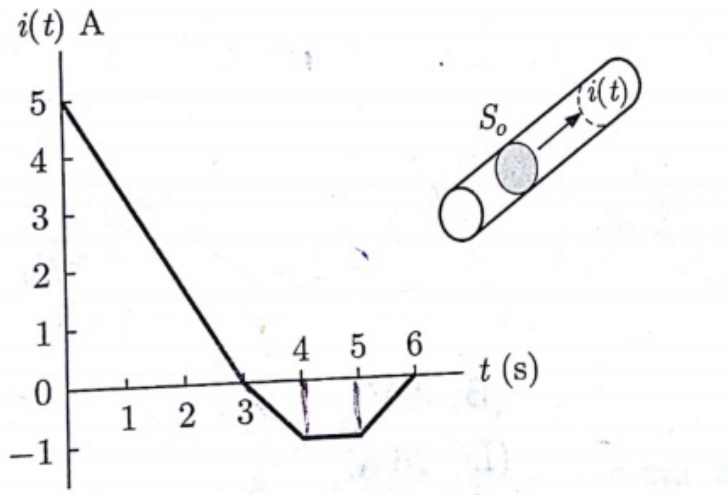

Figure 5: Variation of current.

6. In the circuit shown below, a charge of 600 C is delivered to the 100 V source in a minute. Find the value of voltage source v_1.

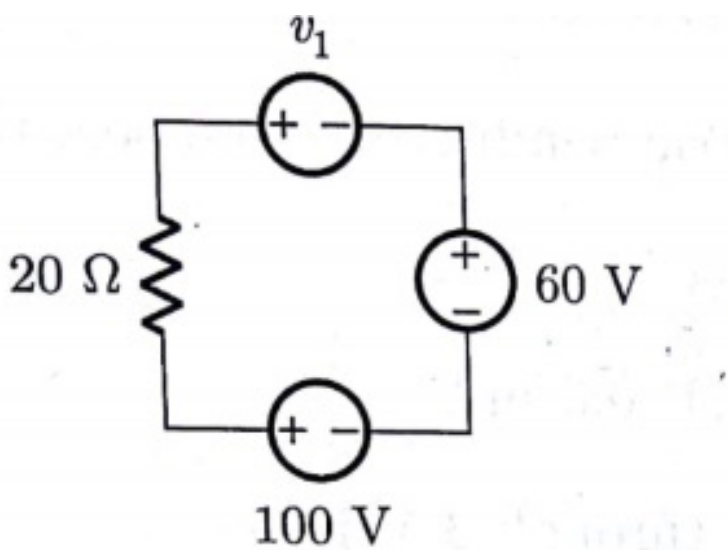

Figure 6:

Q.1

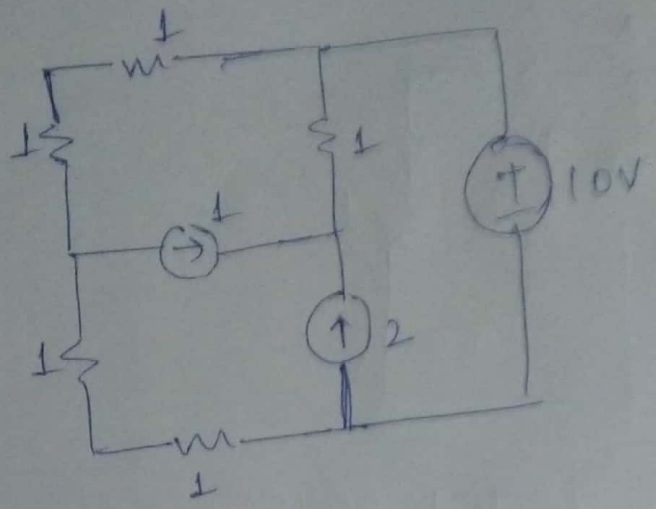

Sol

Circuit can be redrawn as

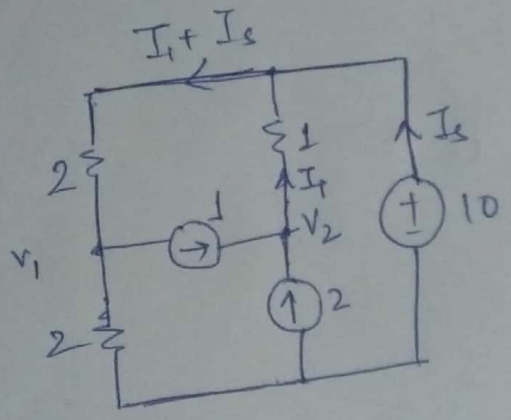

KCL at V_2 gives

$I_1 = 3A$

Applying KCL at V_1

$$\frac{V_1 - 10}{2} + 1 + \frac{V_1}{2} = 0$$

$$\Rightarrow V_1 = 4$$

$$\Rightarrow I_1 + I_s = 3 + I_s$$

$$\Rightarrow 3 + I_s = \frac{10 - V_1}{2} = \frac{10-4}{2} = 3$$

$$\Rightarrow I_s = 0 \Rightarrow P_{supplied} = 0 \text{ Ans}$$

Scanned by CamScanner

Q.2

Sol

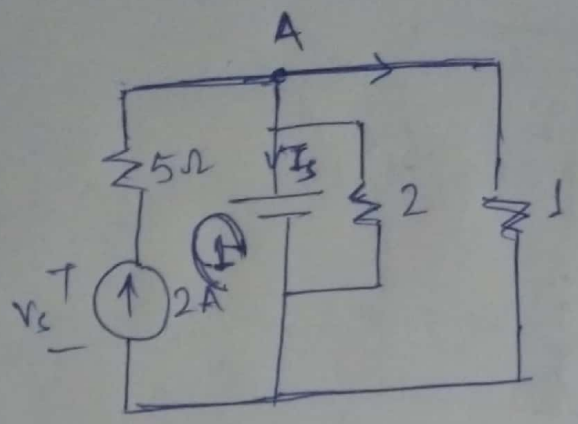

Appling KVL in loop 1 gives,

$V_s - 10 - 10 = 0$

$\Rightarrow \boxed{V_s = 20V}$

Apply KCL at node A
Correct ans will be
Is = -13A

Applying KCL at node A

$2 = I_s + 10$

$\boxed{I_s = -8A}$

Q.3

Sol

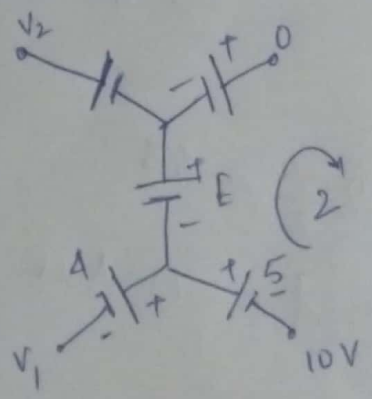

Applying KVL in loop 2,

$10 + 5 + E + 1 = 0$

$\Rightarrow E = -16V$

Scanned by CamScanner

Q.4

Sol

Power delivered by 18V source = $18 i_x$

$$18 i_x = 3(3 i_x) \times i_x + 15 + 20 - 8$$

$$3 i_x^2 - 18 i_x + 27 = 0$$

$$\boxed{i_x = 3}$$ Ans

Q.5

Sol

Area under i(t) curve can give charge flown through conductor.

$$i = \frac{dq}{dt} \Rightarrow Q = \int i\,dt$$

Q = Area of Δ − Area of trapezium

$$= \frac{1}{2} \times 3 \times 5 - \left[\frac{1}{2} \times (1+3) \times 1\right]$$

$$\boxed{Q = 5.5C}$$

Scanned by CamScanner

Q.6

Sol

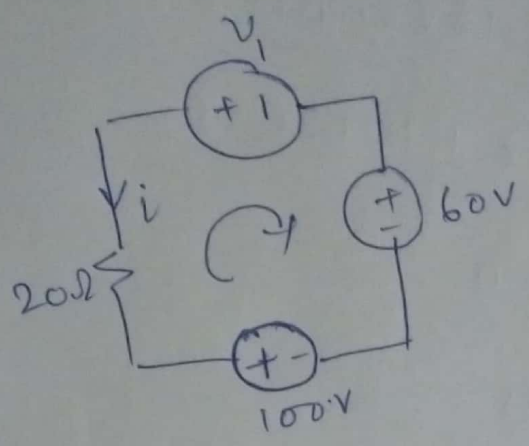

given current

$i = \frac{600}{60} = 10A$

Applying KVL

$-200 - 100 + V_s + 60 = 0$

$\boxed{V_s = 240V}$ Ans

Scanned by CamScanner

Basic Electronics

Tutorial 2

1. Determine v_o and i in the circuit shown below .

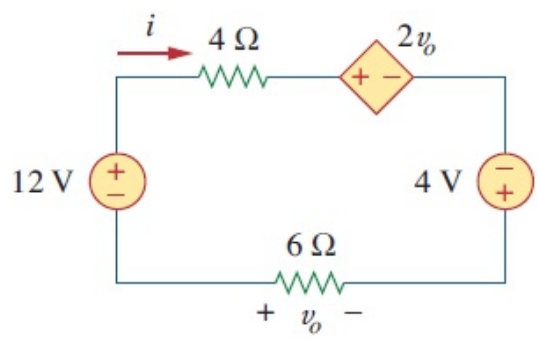

Figure 1:

2. Find current i_o and v_o in the circuit shown in figure below.

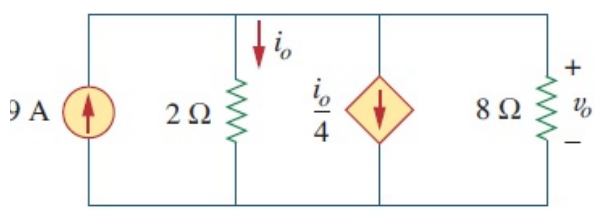

Figure 2:

3. Calculate the equivalent resistance R_{ab} in the circuit shown below.

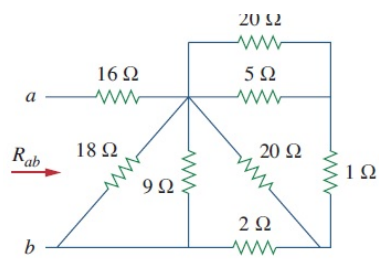

Figure 3:

4. Determine the voltages at nodes 1, 2, and 3 in figure shown below.

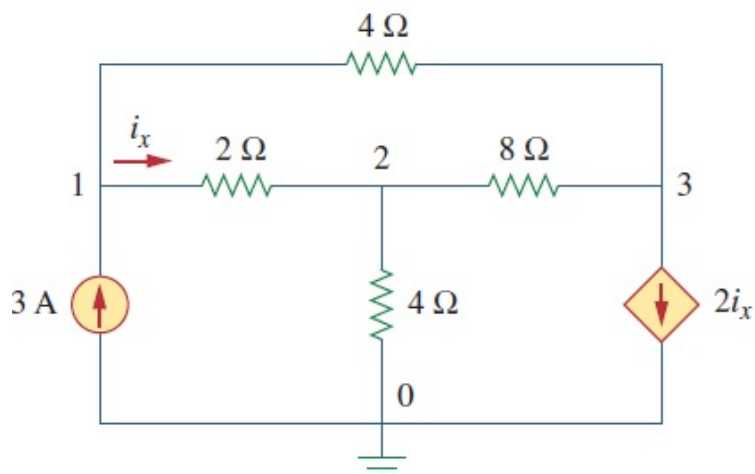

Figure 4:

5. Using mesh analysis, find the current I_o in the circuit shown below.

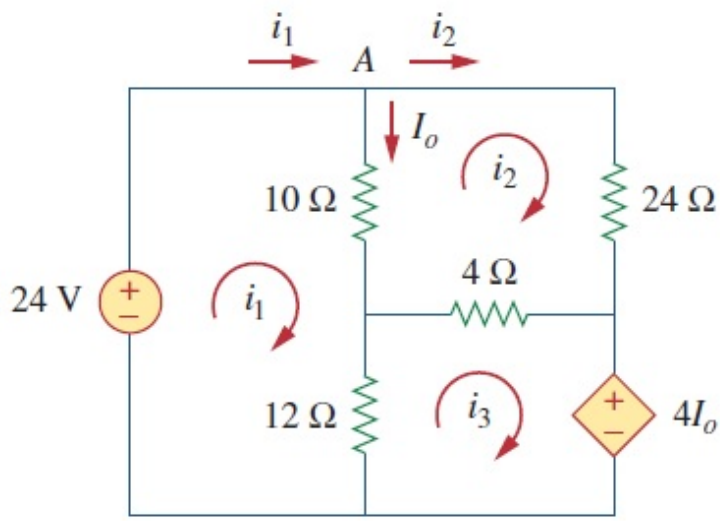

Figure 5: Variation of current.

6. Find I and V_{ab} in the circuit shown below.

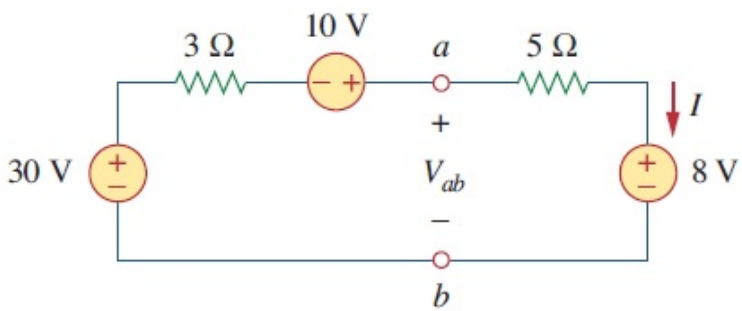

Figure 6:

Problem-1

Determine v_o and i in the circuit shown in fig(a)

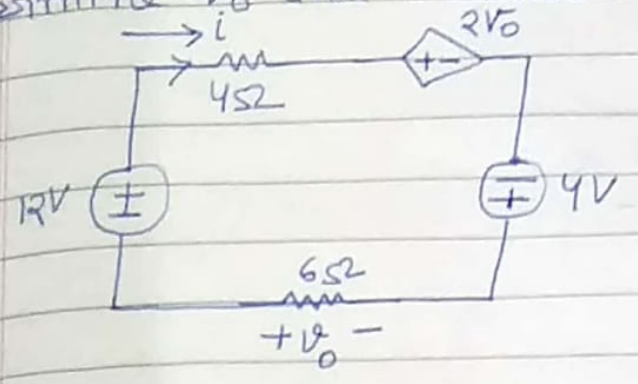

Apply KVL in fig(a)

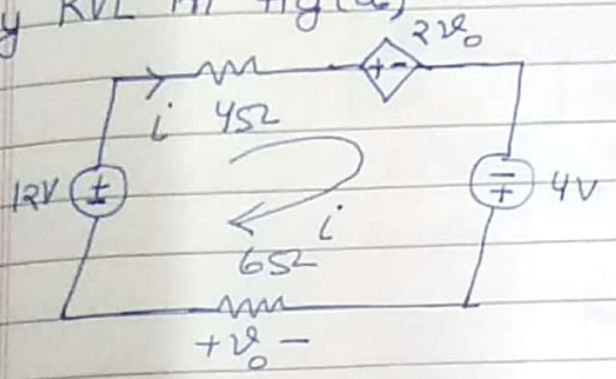

$[v_o = -6i]$

$-12 + 4i + 2v_o - 4 - v_o = 0$

$-12 + 4i - 12i - 4 + 6i = 0$

$[i = -8\ Amp]$ Ans

$\{V_o = 48V\}$ Ans

Problem-2

find Current i_o and V_o in the circuit shown in fig(x)

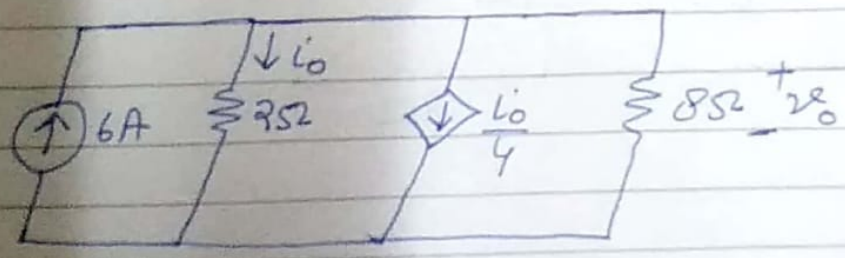

Scanned by CamScanner

Sol'n Apply K.C.L in given ckt after modification

Let assume this Node — $a = v_o$ — due to parallel

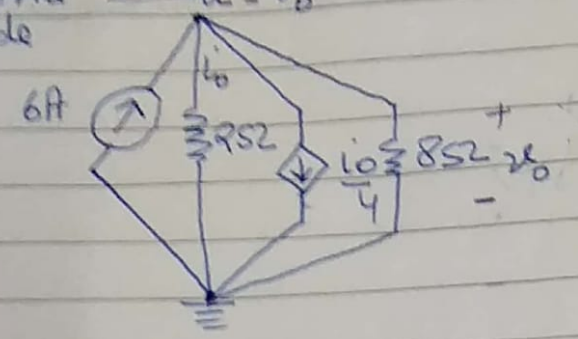

Apply K.C.L at Node a

$$\left[6 = \frac{V_o}{2} + \frac{i_o}{4} + \frac{v_o}{8}\right] \quad \& \left\{i_o = \frac{v_o}{2}\right\}$$

$$6 = \frac{v_o}{4} + \frac{v_o}{2}$$

$\{v_o = 8V\}$ & $[i_o = 4Amp]$ Ans

Problem-3

Q Calculate the equivalent Resistance R_{ab} in the given ckt.

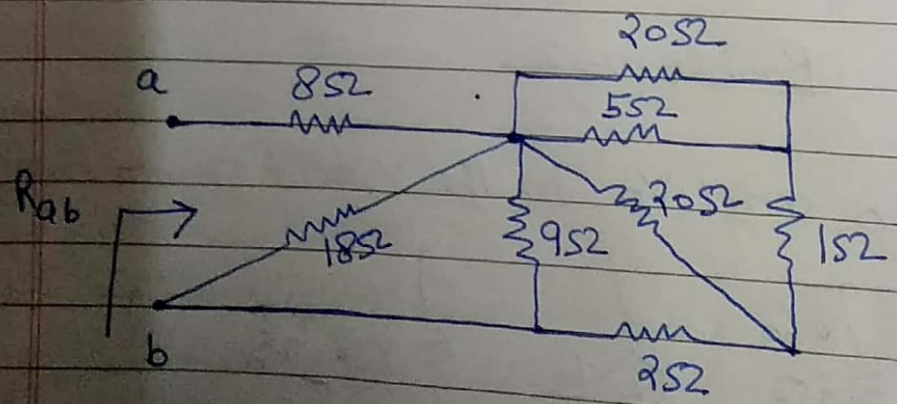

Apply Ist K.C.L at Node a for understanding the Series & Parallel things of Resistance.

Sol

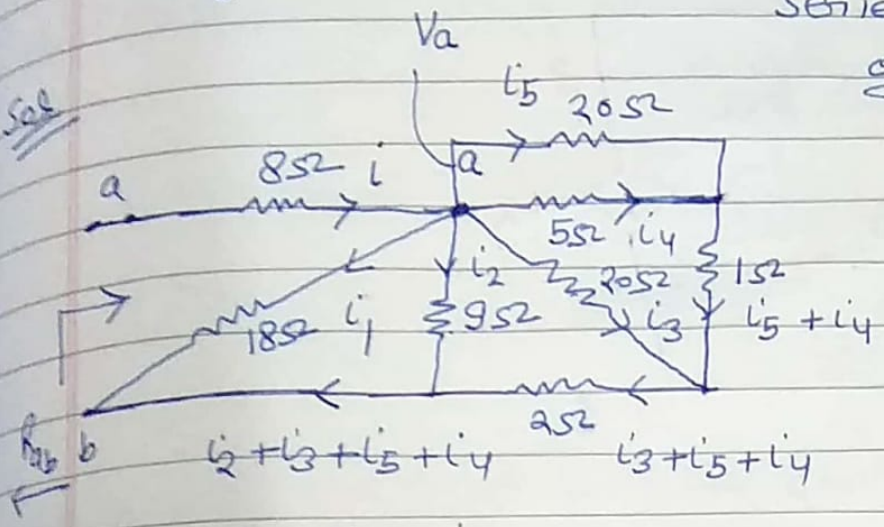

$i = i_1 + i_2 + i_3 + i_5 + i_4$

$\Downarrow$

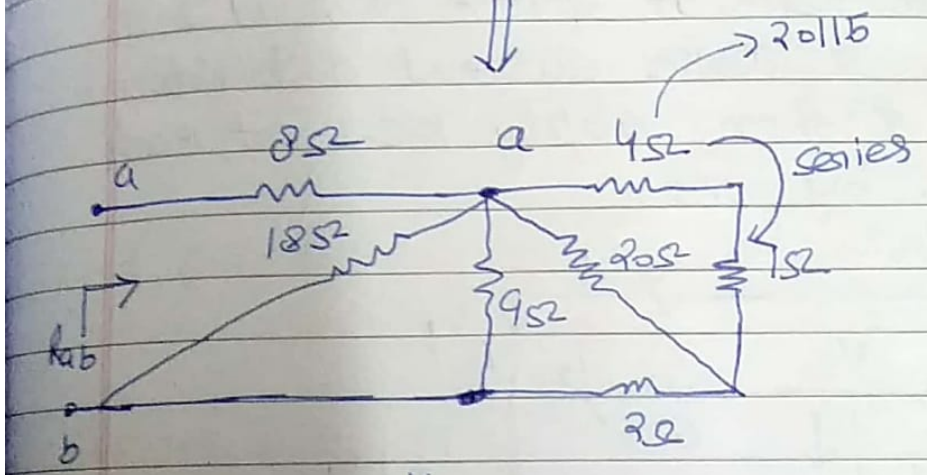

$\Downarrow$

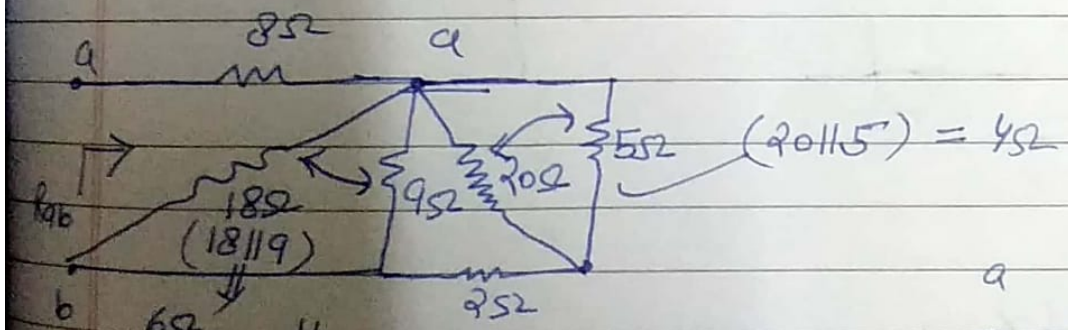

$\Downarrow$

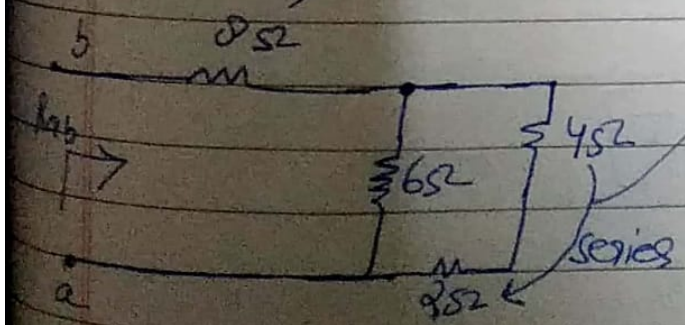

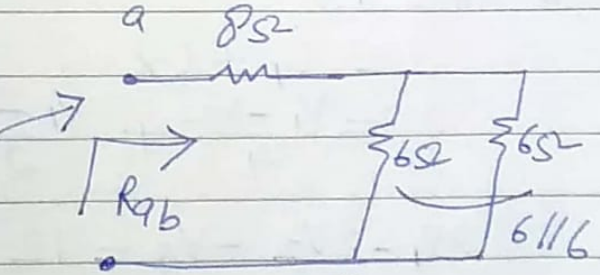

$\Downarrow$

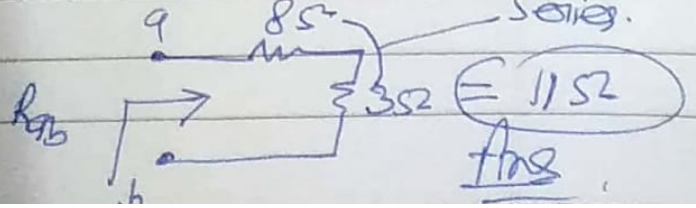

Ans

Scanned by CamScanner

Problem-4

Determine the Voltages at the Nodes in fig.(4)

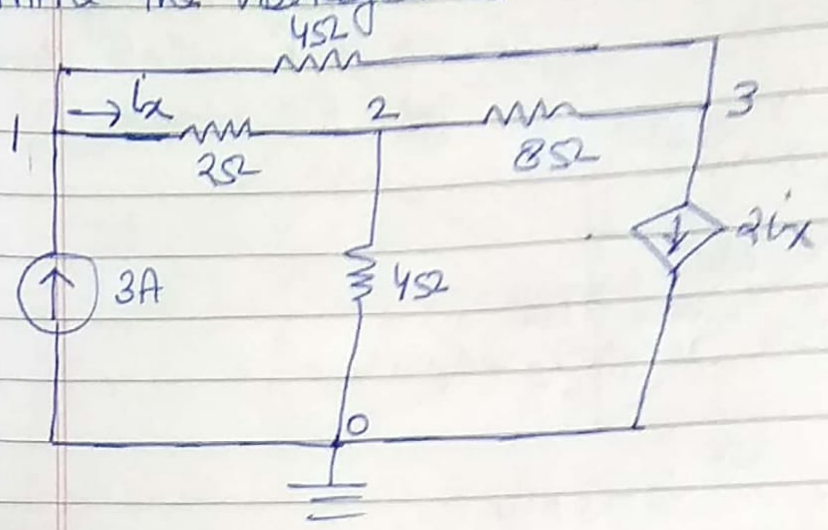

Sol:> first assing Voltage at given Node (1,2,3) is V_1, V_2, V_3. & Make Current distribution at each Node & then apply K.C.L at each Node one by one.

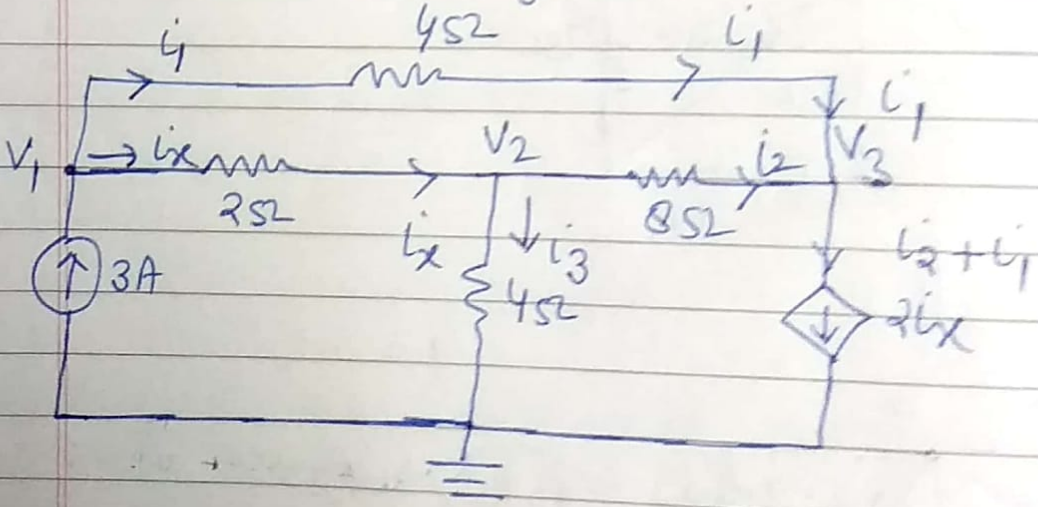

at Node 1:>

$$3 = i_1 + i_x$$

$$3 = \frac{V_1 - V_2}{4} + \frac{V_1 - V_2}{2}$$

$$\{3V_1 - 2V_2 - V_3 = 12 \quad \text{——} \quad I\}$$

Scanned by CamScanner

at Node 2 :

$$i_x = i_3 + i_2$$

$$\frac{V_1 - V_2}{2} = \frac{V_2}{4} + \frac{V_2 - V_3}{8}$$

$$\{-4v_1 + 7v_2 - v_3 = 0\} \quad \text{— II}$$

at Node 3

$$2i_x = i_1 + i_2$$

$$2\left(\frac{V_1 - V_2}{2}\right) = \frac{V_1 - V_3}{4} + \frac{V_2 - V_3}{8}$$

$$\{2v_1 - 3v_2 + v_3 = 0\} \quad \text{— III}$$

add II & III

$$-2v_1 + 4v_2 = 0$$

$$2v_1 = 4v_2$$

$$[v_1 = 2v_2]$$

Put in III

$$4v_2 - 3v_2 + v_3 = 0$$

$$[v_2 = -v_3] \text{ or}$$

$$v_3 = -\frac{v_1}{2}$$

from I

$$3v_1 - v_1 + \frac{v_1}{2} = 12$$

$$2v_1 + \frac{v_1}{2} = 12$$

$$2.5v_1 = 12$$

$$\left\{ v_1 = \frac{12}{2.5} = 4.8v \right\}$$

Ans

$$[v_2 = 2.4v]$$ Ans

$$[v_3 = -2.4v]$$ Ans

Scanned by CamScanner

Problem-5

Use Mesh Analysis to find the current I_o in the ckt.

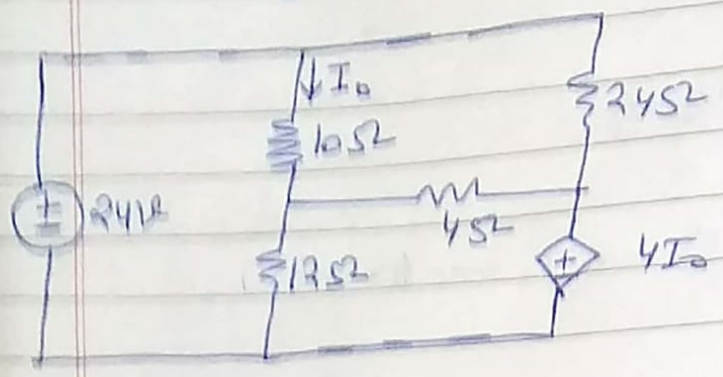

Solⁿ: Identify mesh or Loops & assign current for each Loop in Clockwise or anti Clock wise direction.

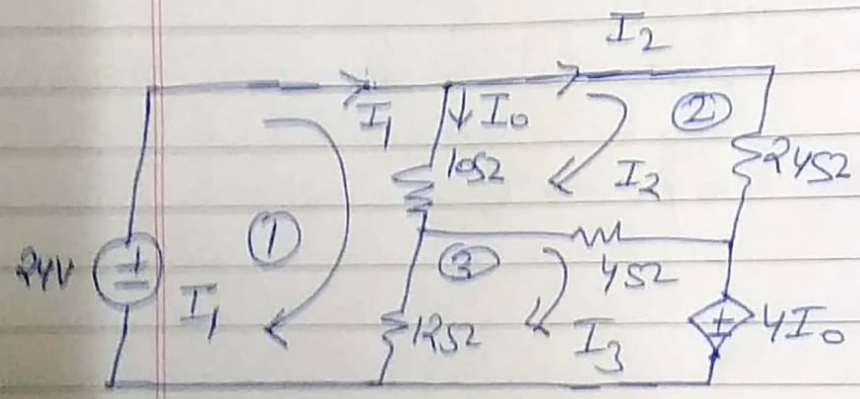

{K.V.L for Mesh I}

$$\{-24V + 10I_o + 12(I_1 - I_3) = 0\}$$

&

$$I_o = (I_1 - I_2)$$

$$\{11i_1 - 5i_2 - 6i_3 = 12 \quad \text{—— I}\}$$

Scanned by CamScanner

for Mesh -2.

$$24I_2 + 4(I_2 - I_3) + 10(I_2 - i_1) = 0$$

$$\{-5I_1 + 19I_2 - 2I_3 = 0\} \quad - II$$

for Mesh -3

$$4I_0 + 12(I_3 - I_1) + 4(I_3 - I_2) = 0$$

$$\{-i_1 - i_2 + 2i_3 = 0\} \quad - III$$

find $i_1 = 2.25$ Amp , $i_2 = 0.75$ Amp

$i_3 = 1.5$ Amp

$\{i_0 = i_1 - i_2 = 1.5 \text{ Amp}\}$ Ans

{Problem-6}

find I & V_{ab} in the circuit.

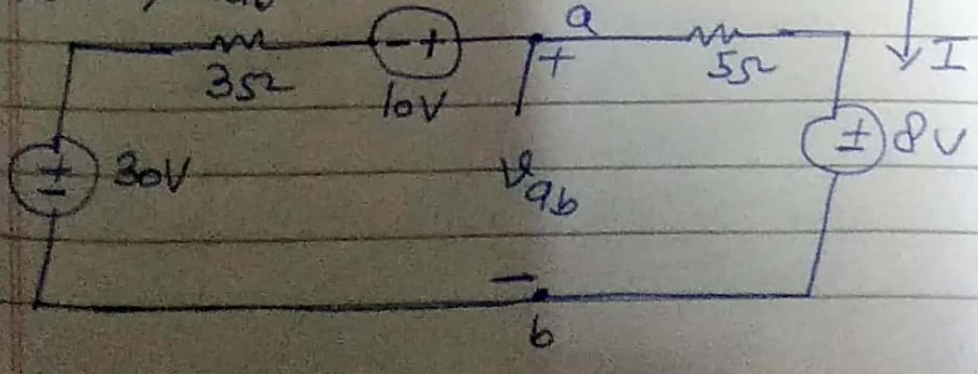

Scanned by CamScanner

Sol:3

Apply KV.L first in whole Loop

$$-30 + 3I - 10 + 5I + 8 = 0$$

$$8I = 32$$

$$[I = 4mA]$$

$$-V_{ab} + 5I + 8 = 0$$

$$5I + 8 = V_{ab}$$

$$[V_{ab} = 28V]$$

Verify K.V.L

$$\{-30 + 12 - 10 + 28 = 0\}$$

Scanned by CamScanner

Basic Electronics

Tutorial 3

1. Calculate the currents I_1 to I_4 and v_o in the circuit shown below.

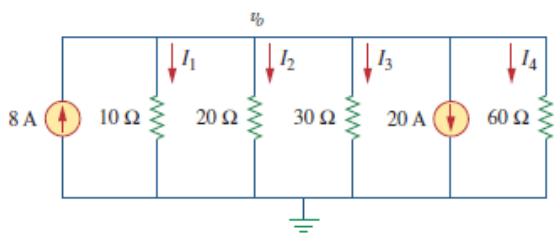

Figure 1:

2. Using nodal analysis to find v_1,v_2, and v_3 in the circuit shown below.

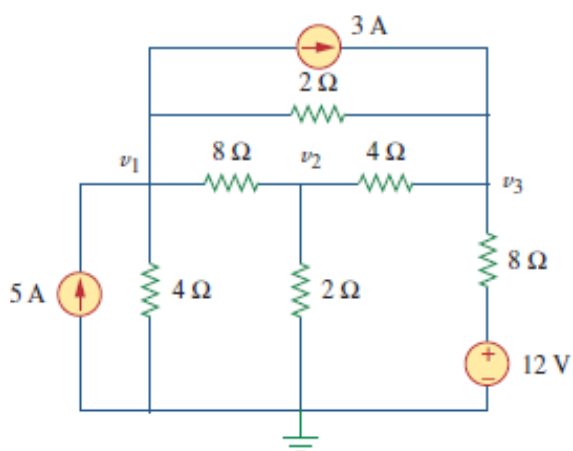

Figure 2:

3. Find v_o and i_o in the circuit shown in figure.

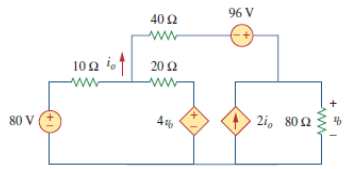

Figure 3:

4. Find i_1 and i_2 in the circuit shown below.

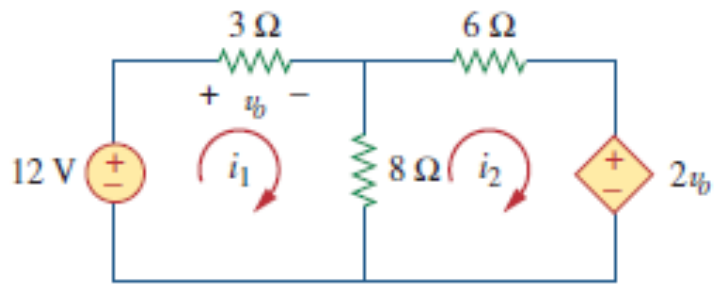

Figure 4:

5. Obtain current I_o in the circuit shown below.

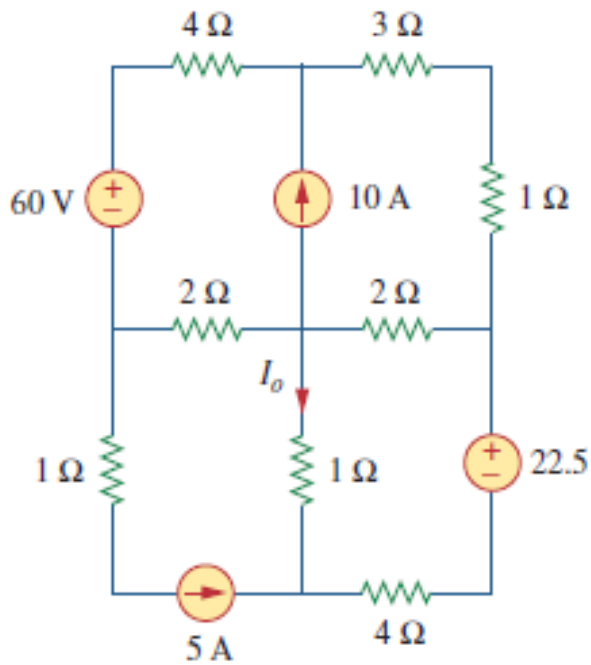

Figure 5:

6. Calculate the current gain i_o/i_s in the circuit shown below.

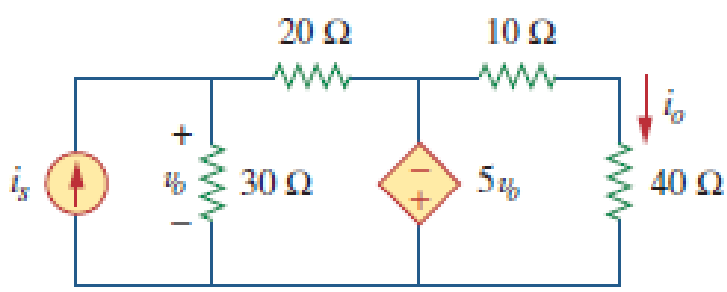

Figure 6:

(1)

TUT-3

To find: I_1, I_2, I_3, I_4, V_o.

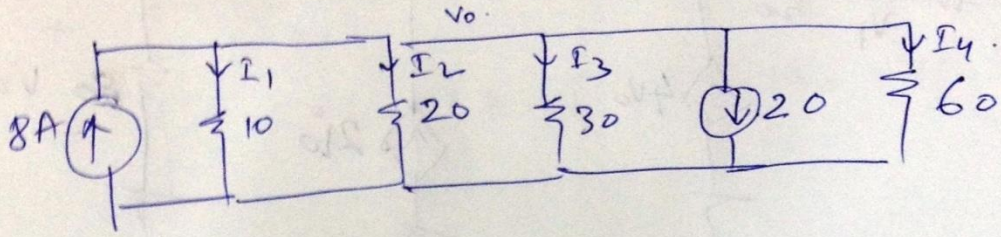

$$8 = 20 + \frac{V_o}{10} + \frac{V_o}{20} + \frac{V_o}{30} + \frac{V_o}{60} \qquad \text{(KCL)}$$

$$8 = 20 + \left(\frac{1}{10} + \frac{1}{20} + \frac{1}{30} + \frac{1}{60}\right) V_o$$

$$\frac{6+3+2+1}{60} = \frac{12}{60} = \frac{1}{5}$$

$$8 = 20 + \frac{V_o}{5}$$

$$V_o = (8-20)5$$

$$= (-12)5$$

$$V_o = -60 \quad \text{Ans}$$

$$I_1 = \frac{V_o}{10} = -6$$

$$I_2 = \frac{V_o}{20} = -3$$

$$I_3 = \frac{V_o}{30} = -2$$

$$I_4 = \frac{V_o}{60} = -1 \quad \text{Ans}$$

(2)

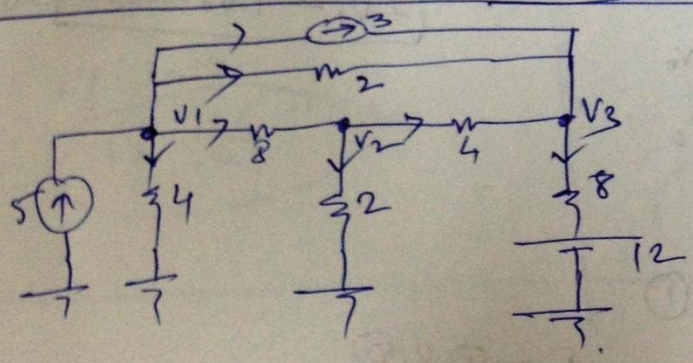

(1) $5 = \frac{V_1}{4} + \frac{V_1 - V_2}{8} + \frac{V_1 - V_3}{2} + 3$

$\Rightarrow 2 = \frac{V_1}{4} + \frac{V_1 - V_2}{8} + \frac{V_1 - V_3}{2}$

$\Rightarrow 16 = 2V_1 + V_1 - V_2 + 4V_1 - 4V_3$

$\Rightarrow \boxed{16 = 7V_1 - V_2 - 4V_3}$ — (1)

(2) $\frac{V_1 - V_2}{8} = \frac{V_2}{2} + \frac{V_2 - V_3}{4}$

$\Rightarrow V_1 - V_2 = 4V_2 + 2V_2 - 2V_3$

$\boxed{V_1 - 7V_2 + 2V_3 = 0}$ — (2)

(3) $\frac{V_2 - V_3}{4} + \frac{V_1 - V_3}{2} + 3 = \frac{V_3 - 12}{8}$

$\Rightarrow 2V_2 - 2V_3 + 4V_1 - 4V_3 + 24 = V_3 - 12$

$\Rightarrow \boxed{4V_1 + 2V_2 - 7V_3 = -36}$ — (3)

solving 3 Eqns we get

$V_1 = 10$

$V_2 = 4.9$

$V_3 = 12.266$ Ans

(8)

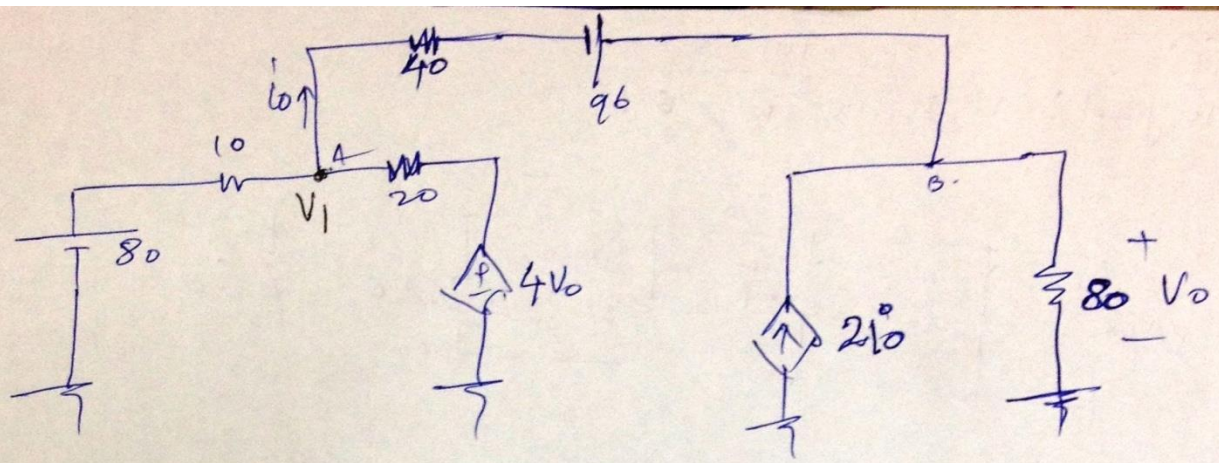

$$\cancel{\frac{80-V_1}{10} + \frac{4V_o - V_1}{20} = i_o}$$

KCL at B

$$2i_o + i_o = \frac{V_o}{80}$$

$$\Rightarrow 3i_o = \frac{V_o}{80}$$

$$\Rightarrow 3\left\{\frac{V_1 - V_o + 96}{40}\right\} = \frac{V_o}{80}$$

$$\Rightarrow \frac{3V_1 - 3V_o + (3\times 96)}{40} = \frac{V_o}{80}$$

$$\Rightarrow 2\left(3V_1 - 3V_o + (3\times 96)\right) = V_o$$

$$\Rightarrow 6V_1 - 6V_o + (6\times 96) = V_o$$

$$\Rightarrow 6V_1 - 7V_o + 576 = 0$$

$$\Rightarrow \boxed{6V_1 - 7V_o = -576} \quad (1)$$

KCL AT A

$$\frac{80-V_1}{10} + \frac{4V_o - V_1}{20} = \frac{V_1 - V_o + 96}{40}$$

$$4(80 - V_1) + 2(4V_o - V_1) = V_1 - V_o + 96$$

$$320 - 4V_1 + 8V_o - 2V_1 = V_1 - V_o + 96$$

$$224 = 7V_1 - 9V_o$$

ie

$$\boxed{7V_1 - 9V_o = 224} \quad (2)$$

From (1) & (2)

$$\boxed{\begin{aligned} V_1 &= -1350.4 \\ V_o &= -1075.2 \end{aligned}}$$ Ans

$$i_o = \frac{V_1 - V_o + 96}{40}$$

$$\boxed{i_o = \frac{-1350.4 + 1075.2 + 96}{40}}$$ Ans

(4)

$v_o = i_1 3$

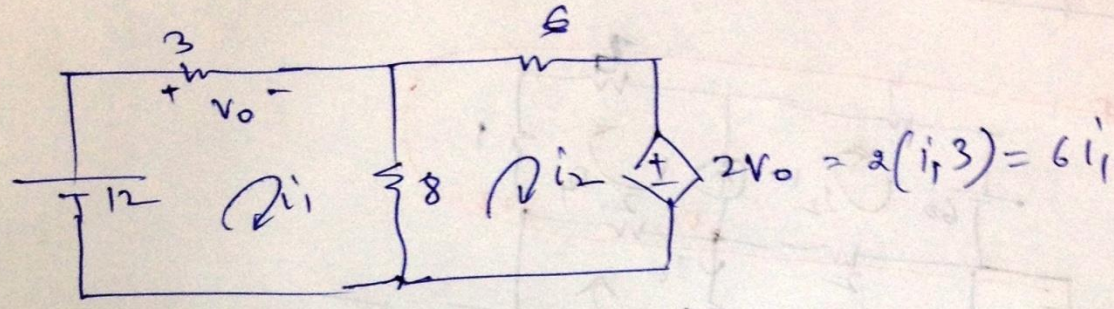

$12 - i_1 3 - (i_1 - i_2) 8 = 0$

$\Rightarrow 12 - i_1 3 - i_1 8 + i_2 8 = 0$

$\Rightarrow -11 i_1 + 8 i_2 = -12$

$\Rightarrow \boxed{11 i_1 - 8 i_2 = 12}$ — (1)

$-(i_2 - i_1) 8 - i_2 6 - 6 i_1 = 0$

$\Rightarrow -8 i_2 + 8 i_1 - 6 i_2 - 6 i_1 = 0$

$\Rightarrow 2 i_1 - 14 i_2 = 0$

$\Rightarrow i_1 = 7 i_2$ — (2)

From (2)

$11(7 i_2) - 8 i_2 = 12$

$\Rightarrow 77 i_2 - 8 i_2 = 12$

$\Rightarrow 69 i_2 = 12$

$i_2 = 12/69$ Ans

$\therefore i_1 = 7 i_2 = 7\left(\frac{12}{69}\right)$

$i_1 = \frac{84}{69}$ Ans

(5) To find i_o

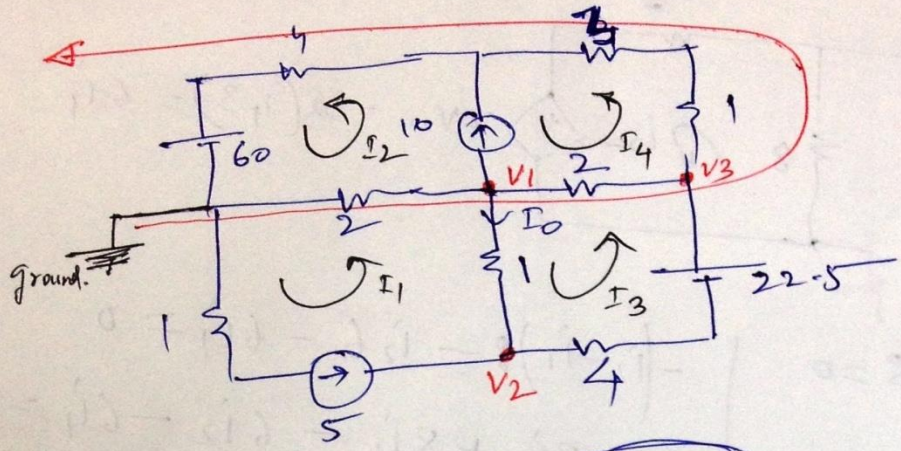

$I_1 = 5$ — (1)

$I_o = I_3 - I_1$

$\boxed{I_o = I_3 - 5}$ — (A)

Need to calculate I_3 ↓

From fig. $\boxed{I_2 - I_4 = 10}$

KVL

$-4I_3 + 22.5 - (I_3 - I_4)2 - (I_3 - I_1)1 = 0$

$\Rightarrow -4I_3 + 22.5 - 2I_3 + 2I_4 - I_3 + 5 = 0$

$\Rightarrow \boxed{-7I_3 + 2I_4 = -22.5}$ — (2)

Supermesh

$-(I_2 - I_1)2 - (I_4 - I_3)2 - 4I_4 - I_2 4 - 60 = 0$

$\Rightarrow -2I_2 - 10 - 2I_4 + 2I_3 - 4I_4 - 4I_2 - 60 = 0$

$\Rightarrow -6I_2 + 2I_3 - 6I_4 - 50 = 0$

$\Rightarrow -6(10 + I_4) + 2I_3 - 6I_4 - 50 = 0$

$\Rightarrow -60 - 6I_4 + 2I_3 - 6I_4 - 50 = 0$

$\Rightarrow \boxed{2I_3 - 12I_4 = 110}$ — (3)

From (2) & (3) $\boxed{I_3 = 0.625}$

$I_o = 0.625 - 5$

$\boxed{I_o = -4.375}$

Ans.

(6)

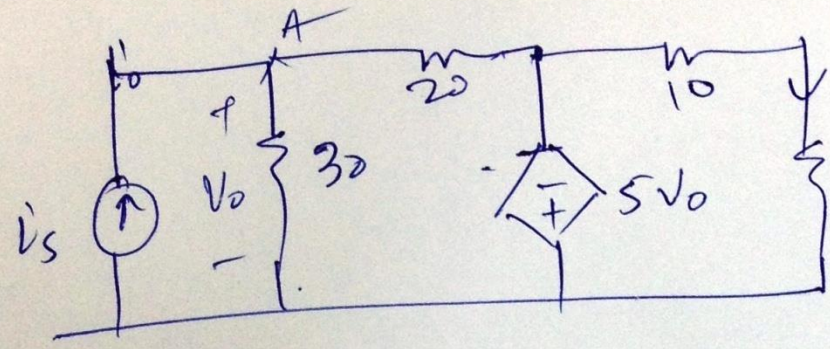

$$i_o = \frac{-5V_o}{50} = -\frac{V_o}{10}$$

so $V_o = -10 i_o$

KCL at A.

$$i_s = \frac{V_o}{30} + \frac{V_o + 5V_o}{20}$$

$$i_s = \frac{V_o}{30} + \frac{6V_o}{20}$$

$$i_s = \frac{2V_o + 18V_o}{60}$$

$$i_s = \frac{20V_o}{60} = \frac{20(-10 i_o)}{60}$$

$$= \frac{-200 i_o}{60}$$

$$\frac{i_o}{i_s} = -\frac{60}{200}$$

$$\boxed{\frac{i_o}{i_s} = -0.3}$$ Ans.

Basic Electronics

Tutorial 4

1. Write the mesh-current equations for the circuit.

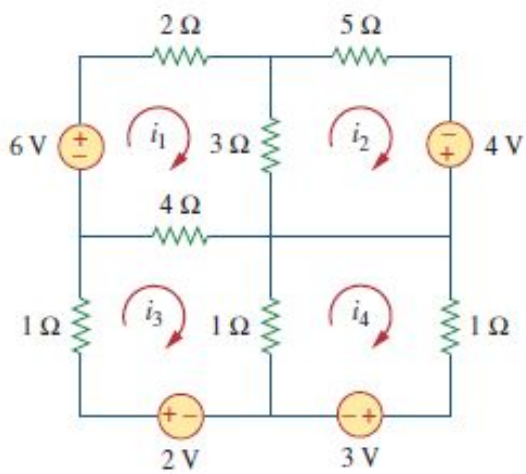

Figure 1:

2. (a) In the given circuit, calculate v_o and i_o when $v_s = 1V$.
   (b) Find v_o and i_o when $v_s = 10V$
   (c) What are v_o and i_o when each of the $1\,\Omega$ resistors is replaced by a $10\,\Omega$ resistor and v_s=10V.

.

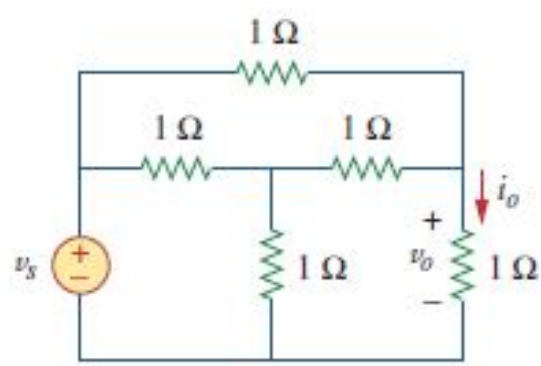

Figure 2:

3. Apply Thevenin's theorem to find V_o in the circuit given below.

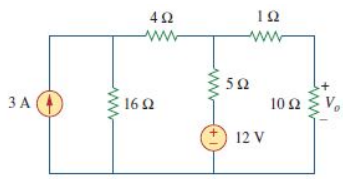

Figure 3:

4. Determine the Norton's equivalent at the terminals a-b for the circuit shown below.

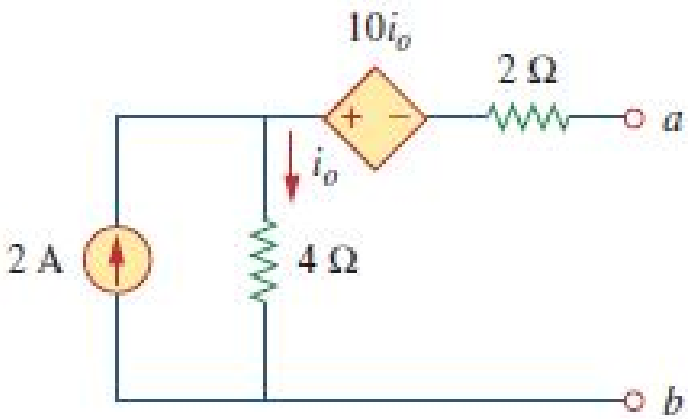

Figure 4:

5. Find the Thevenin's equivalent at the terminals a-b for the circuit shown below.

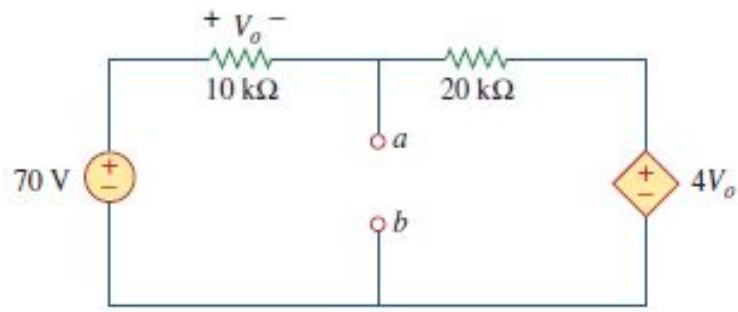

Figure 5:

Ex-4

(3)

(2)

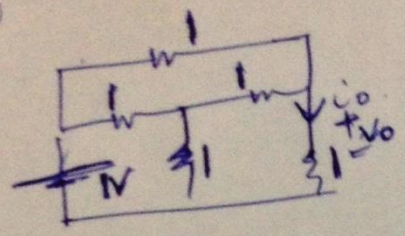

(a) using thevenin's

R_{th}

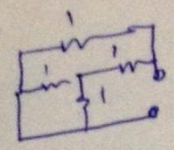

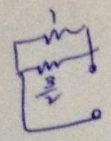

$R_{th} = \frac{3/2}{1+3/2} = \frac{3/2}{5/2} = \frac{3}{5}$

$V_{th} =$

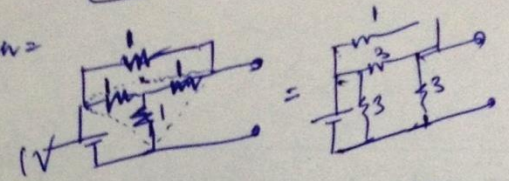

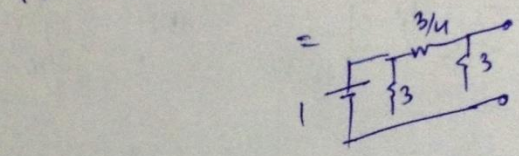

$V_{th} = \left(\frac{3}{\frac{3}{4}+3}\right)1$

$= \frac{3}{\frac{15}{4}}$

$= \frac{12}{15}$

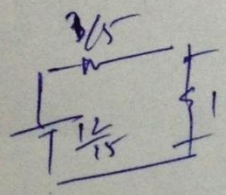

$V_o = \left(\frac{1}{\frac{3}{5}+1}\right)\frac{12}{15}$

$= \frac{5}{8}\cdot\frac{12}{15} = \frac{1}{2}$

$i_o = \frac{12/15}{3/5+1} = \frac{12/15}{8/5} = \frac{12}{15}\cdot\frac{5}{8} = \frac{1}{2}$

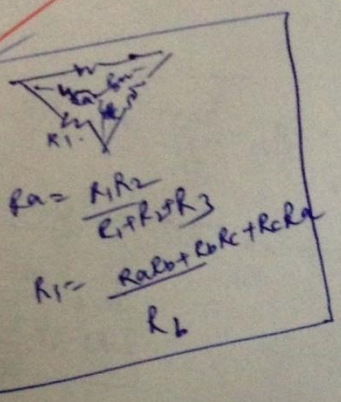

$R_a = \frac{R_1R_2}{R_1+R_2+R_3}$

$R_1 = \frac{R_aR_b+R_bR_c+R_cR_a}{R_b}$

Simpler

OR using Δ → Y only

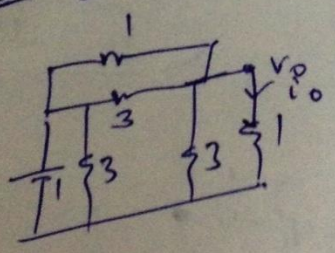

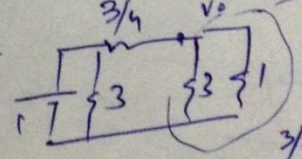

3/4.

$V_o = \frac{3/4}{3/4+3/4}\cdot 1 = \frac{1}{2}$

$i_o = \frac{1}{2}$.

(b) Homogeneity ⇒ only one source ~~only~~ nothing else

$V_o = \frac{1}{2}(10) = 5$

$i_o = 5$

or general eqn that out - $V_o = \frac{V_s}{2}$, $i_o = \frac{V_o}{R}$

From 2(a)

Here R & V Both vary

Cal. gen. eqn Volt $= \frac{V_s}{2} = 10/2 = 5$

$i_o = \frac{Volt}{R} = \frac{(10/2)}{10} = \frac{1}{2}$

---

(3)

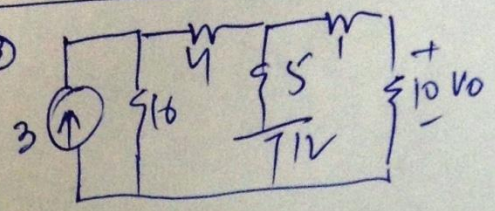

(1) Rth

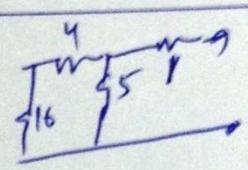

$R_{th} = \frac{20 \times 5}{25} + 1 = 5\Omega$

Vth.

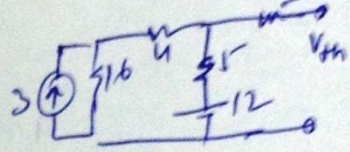

ignored = open ckt

$\equiv$

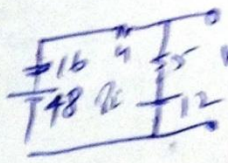

$i = \frac{48-12}{16+4+5} = \frac{36}{25}$

$V_{th} = \frac{36}{25}(5) + 12$

$= \frac{36}{5} + 12$

$= 7.2 + 12 = 19.2$

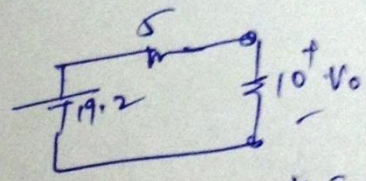

$V_o = \frac{10}{15} \times 19.2$

$V_o = 12.8$

---

(4) $R_{th} = \frac{6 \quad 14 \quad 5}{}$ $R_{th}\left(\frac{20 \times 5}{25}\right) = 4$

I_{sc}

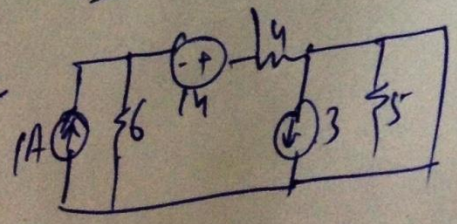

$\equiv$

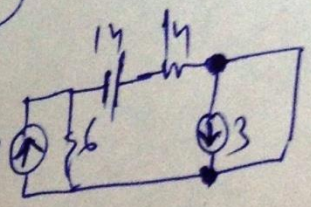

$\Rightarrow$

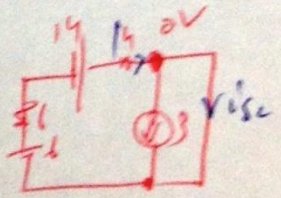

$\frac{20}{20} = 3 + i_{sc}$

$1 = 3 + i_{sc}$

$i_{sc} = 1 - 3 = -2$

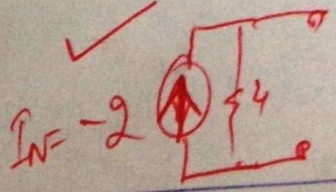

(a) a-b

Rm

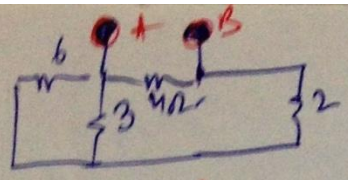

$\frac{18}{9} = 2$

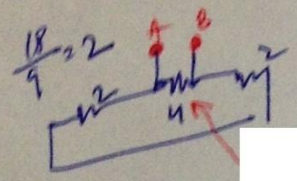

$R_m = 2 \parallel 4 = 2$

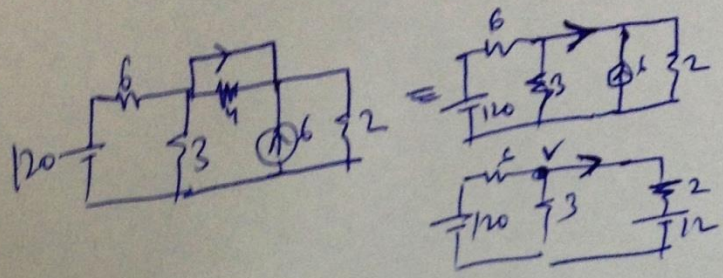

$$\frac{120-V}{6} = \frac{V}{3} + \frac{V-12}{2}$$

$$20 - \frac{V}{6} = \frac{V}{3} + \frac{V}{2} - 6$$

$$26 = \frac{V}{3} + \frac{V}{2} + \frac{V}{6} = \left(\frac{2+3+1}{6}\right)V = V$$

$V = 26$ $\quad$ ~~$i = \frac{14+12}{2} = 2$~~ $\quad$ 13

$$i = \frac{26-12}{2} = \frac{14}{2} = 7$$

(b) c-d

Rm

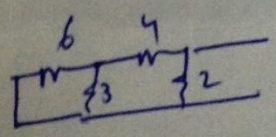

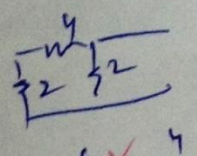

$\frac{6 \times 2}{8} = \frac{12}{8} = \frac{3}{2}$

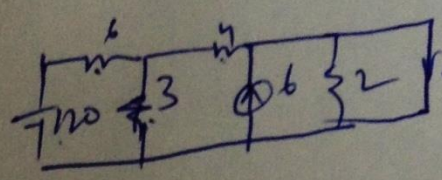

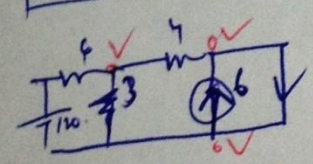

$$\frac{120-V}{6} = \frac{V}{3} + \frac{V}{4}$$

$$20 - \frac{V}{6} = \frac{V}{3} + \frac{V}{4}$$

$$20 = \frac{V}{3} + \frac{V}{4} + \frac{V}{6}$$

$$= \frac{4+3+2}{12} V$$

$$20 = \frac{9}{12} V$$

$$V = \frac{20 \times 12}{9} = \frac{80}{3}$$

$$\begin{array}{r|l} 2 & 3,4,6 \\ 3 & 3,2,3 \\ & 1,2,1 \end{array}$$

$$\frac{80}{3 \times 4} + 6 = I_{sc}$$

$$\Rightarrow \frac{20}{3} + 6 = I_{sc}$$

$$\Rightarrow \frac{20+18}{3} = I_s$$

$$\Rightarrow \frac{38}{3} = I_{sc}$$

$$\boxed{\Rightarrow 12.66 = I_{sc}}$$

Basic Electronics

Tutorial 5

1. Find the maximum power that can be delivered to the resistor R in the circuit shown below.

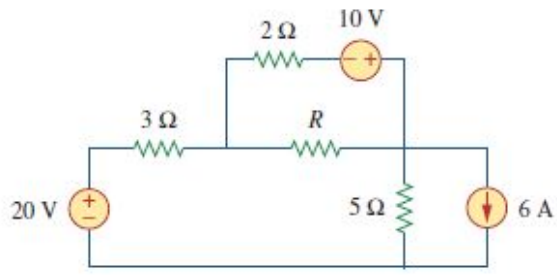

Figure 1:

2. Determine the value of R in the circuit shown below, such that maximum power is delivered to the load resistance R_L is 3mW.

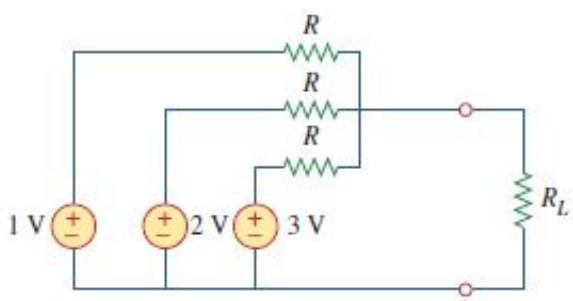

Figure 2:

3. For the circuit shown below, find the load R_L and the maximum power absorbed by the load.

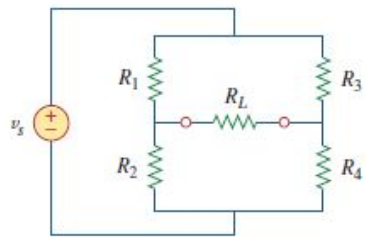

Figure 3:

4. (a) For the circuit shown below, find the Thevenin equivalent at terminals a-b.
   (b) Find R_L for maximum power deliverable to R_L.
   (c) Determine the maximum power.

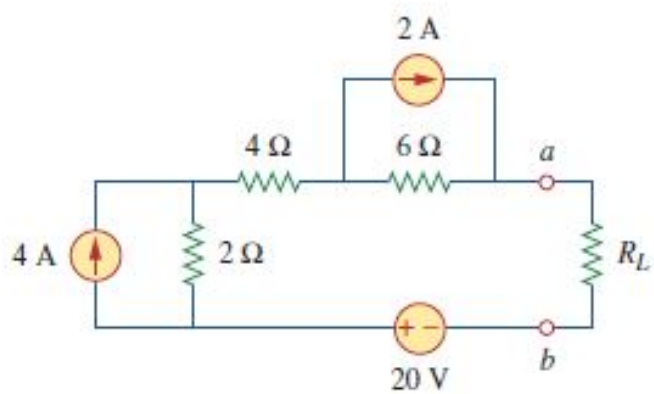

Figure 4:

5. Determine the maximum power delivered to variable resistance R in the circuit shown below.

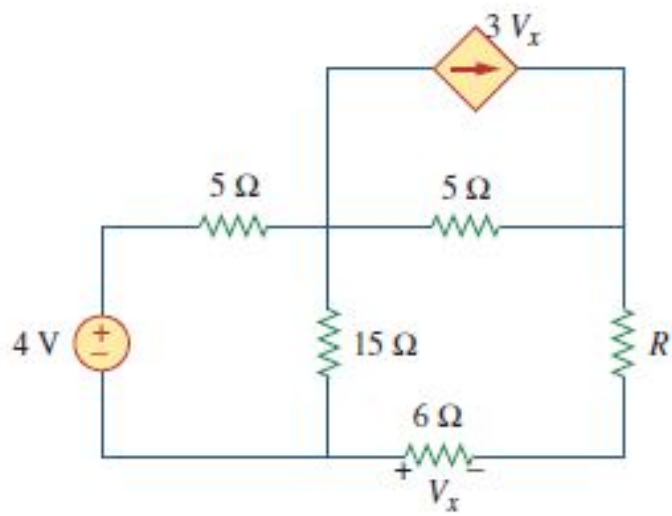

Figure 5:

Solution 1

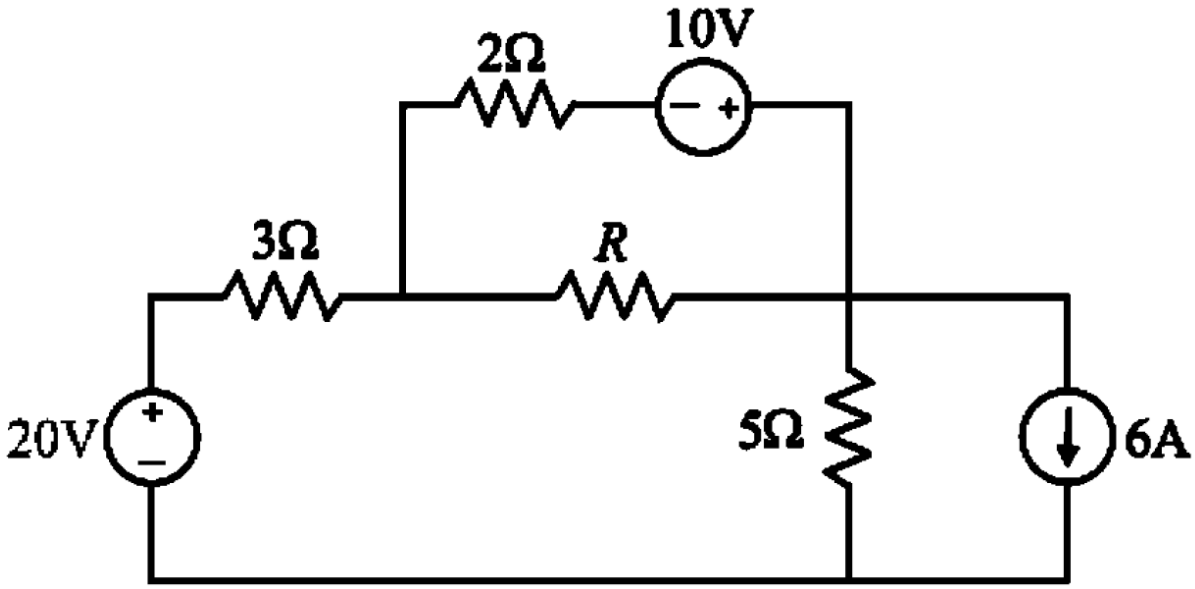

Step 2 of 10

First we need to determine Thevenin's equivalent circuit
To determine Thevenin's equivalent resistance given circuit represented as below

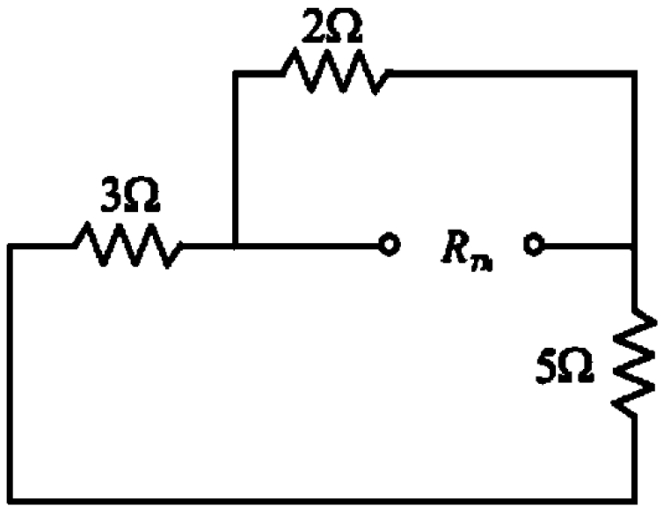

Step 3 of 10

From the above circuit we can write

$$R_{Th} = 2\Omega \| (3\Omega + 5\Omega)$$

$$R_{Th} = 2 \| (8)$$

$$R_{Th} = \frac{2 \times 8}{2+8}$$

$$R_{Th} = 1.6\Omega$$

Step 4 of 10

To determine Thevenin's equivalent voltage given circuit can be represented as below

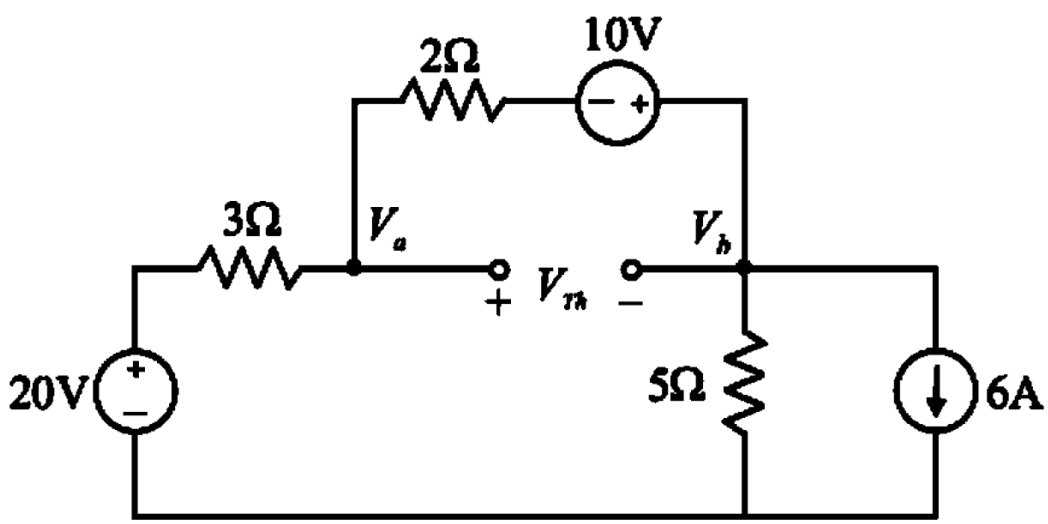

Step 5 of 10

By applying KCL at node V_a we can write

$$\frac{V_a - 20}{3} + \frac{V_a + 10 - V_b}{2} = 0$$

$$\frac{2V_a - 40 + 3V_a + 30 - 3V_b}{6} = 0$$

$$2V_a - 40 + 3V_a + 30 - 3V_b = 0$$

$$5V_a - 3V_b = 10 \qquad \ldots\ldots\ldots\ldots (1)$$

Step 6 of 10

By applying KCL at node V_b we can write

$$\frac{V_b - 10 - V_a}{2} + \frac{V_b}{5} + 6 = 0$$

$$\frac{5V_b - 50 - 5V_a + 2V_b + 60}{10} = 0$$

$$5V_b - 50 - 5V_a + 2V_b + 60 = 0$$

$$-5V_a + 7V_b = -10 \qquad \ldots\ldots\ldots\ldots\ldots (2)$$

By adding (1) and (2) equations we can get

$$4V_b = 0$$

$$V_b = 0\text{V}$$

Substituting $V_b = 0\text{V}$ in equation (1) gives

$$5V_a - 3(0) = 10$$

$$5V_a = 10$$

$$V_a = 2\text{V}$$

From the above circuit we can write

$$V_{ab} = V_a - V_b$$

$$V_{ab} = 2 - 0$$

$$V_{ab} = 2\text{V}$$

Step 8 of 10

Equivalent circuit for the given circuit

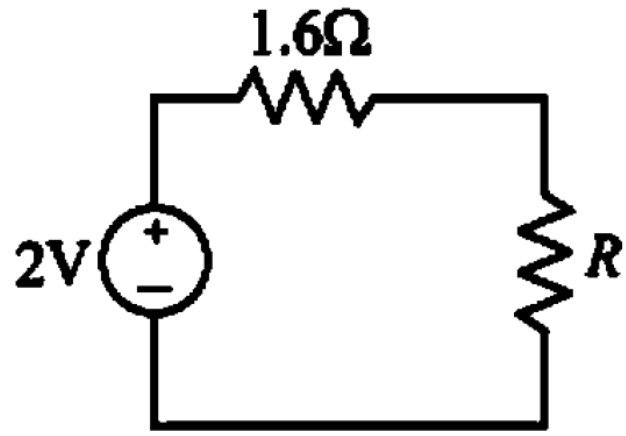

Step 9 of 10

Maximum power delivered to load when $R = R_{th} = 6\Omega$

Voltage across resistor R given by

$$V_R = (V_{th})\left(\frac{R}{R+1.6}\right)$$

$$V_R = (V_{th})\left(\frac{1.6}{1.6+1.6}\right)$$

$$V_R = \frac{V_{th}}{2}$$

Step 10 of 10

Therefore maximum power delivered to resistor R

$$P_{max} = \frac{(V_R)^2}{R}$$

$$P_{max} = \frac{\left(\frac{V_{Th}}{2}\right)^2}{R_{Th}} \qquad \left(\because V_R = \frac{V_{Th}}{2} \text{ and } R = R_{Th}\right)$$

$$P_{max} = \frac{(V_{Th})^2}{4R_{Th}}$$

$$P_{max} = \frac{(2)^2}{4(1.6)}$$

$$\boxed{P_{max} = 0.625\text{W}}$$

Solution 2

We need to **first find** R_{Th} **and** V_{Th}.

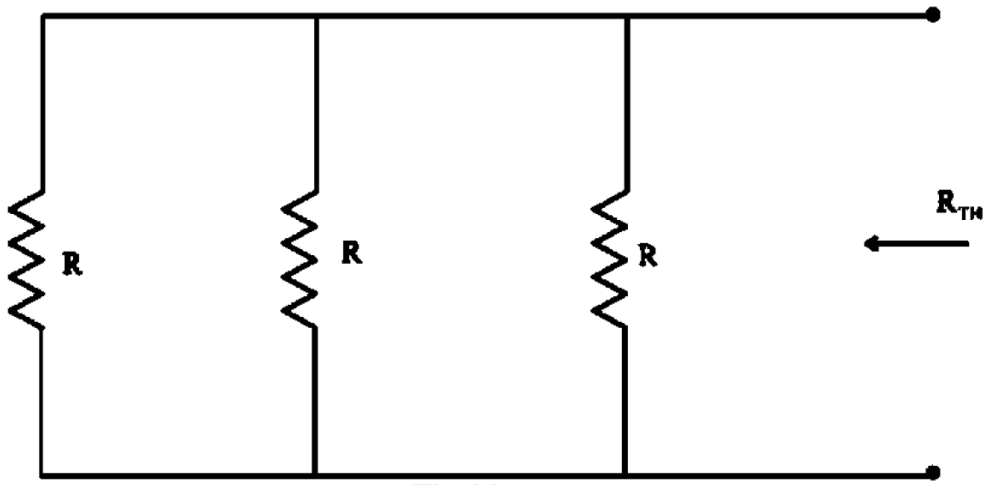

Fig (a)

Step 2 of 5

Consider the circuit in Fig-(a).

$$\left(\frac{1}{R_{Th}}\right)=\left(\frac{1}{R}\right)+\left(\frac{1}{R}\right)+\left(\frac{1}{R}\right)$$

$$\frac{1}{R_{Th}}=\frac{3}{R}$$

$$R_{Th}=\frac{R}{3}$$

Step 3 of 5

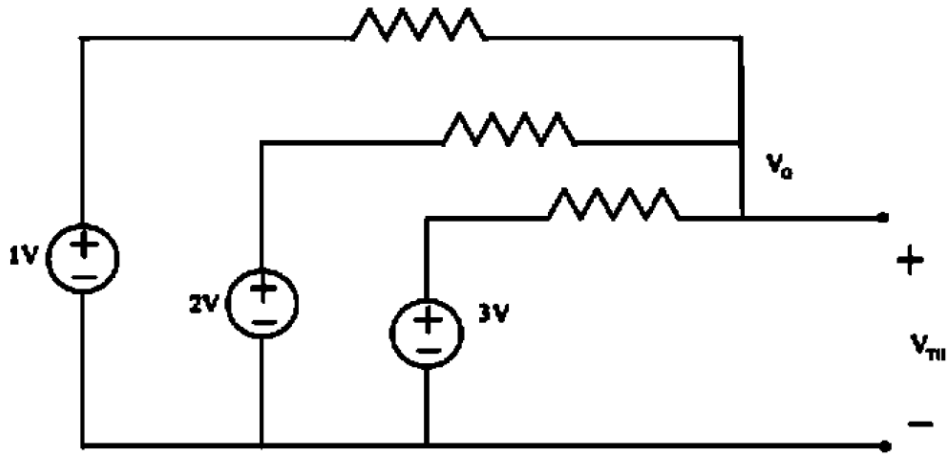

Fig-(b)

Step 4 of 5

From the circuit in fig (b),

$$\left[\frac{(1-V_0)}{R}+\frac{(2-V_0)}{R}+\frac{(3-V_0)}{R}\right]=0$$

$$3V_0 = 6$$

$$V_0 = 2\text{V}$$

Therefore, $V_0 = V_{Th}$

$$V_{Th} = 2\text{V}$$

Step 5 of 5

For maximum power transfer,

$$R_L = R_{TH} = \frac{R}{3}$$

$$P_{Max} = \left[\frac{(V_{TH})^2}{4\,R_{TH}}\right]$$

$$R_{TH} = \left[\frac{(V_{TH})^2}{(4\,P_{Max})}\right]$$

$$R_{TH} = \frac{4}{4 \times P_{Max}}$$

$$R_{TH} = \frac{1}{P_{Max}}$$

$$\frac{R}{3} = \frac{1}{P_{Max}} \quad (\text{Given } P_{max} = 3\text{mW})$$

$$R = \frac{3}{3 \times 10^{-3}}$$

$$\boxed{R = 1\text{k}\Omega}$$

Solution 3

The following is the given circuit diagram:

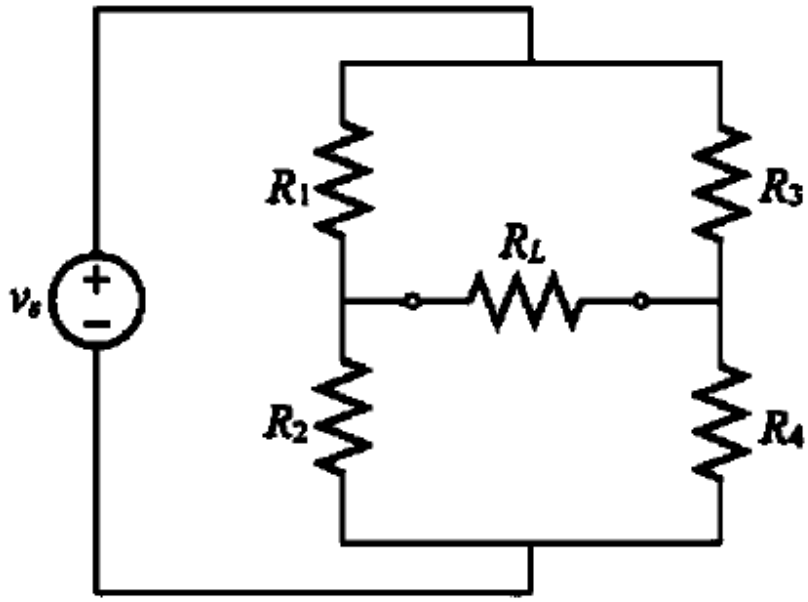

Step 2 of 6

To find Thevenin's resistance, load resistor R is removed and v_s is short circuited. The modified circuit is shown below.

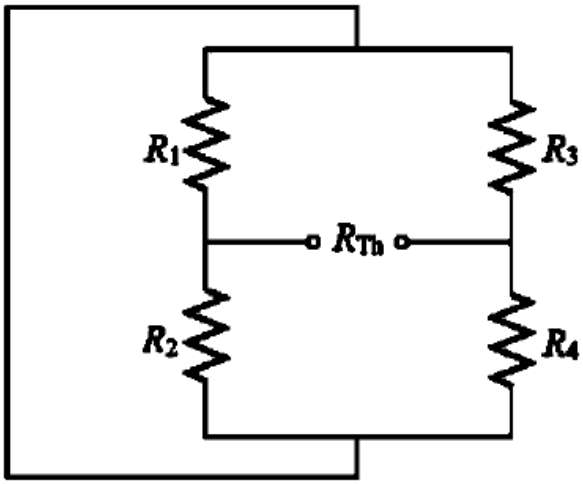

Step 3 of 6

Looking from the open terminals of the above figure,

$$\begin{aligned} R_{Th} &= (R_1 \parallel R_2) + (R_3 \parallel R_4) \\ &= \frac{R_1 R_2}{R_1 + R_2} + \frac{R_3 R_4}{R_3 + R_4} \\ &= \frac{R_1 R_2 (R_3 + R_4) + R_3 R_4 (R_1 + R_2)}{(R_1 + R_2)(R_3 + R_4)} \\ &= \frac{R_1 R_2 R_3 + R_1 R_2 R_4 + R_1 R_3 R_4 + R_2 R_3 R_4}{(R_1 + R_2)(R_3 + R_4)} \end{aligned}$$

Hence for maximum power transfer through load, the value of load resistance is equal to Thevenin's resistance. That is,

$$\begin{aligned} R_L &= R_{Th} \\ &= \frac{R_1 R_2 R_3 + R_1 R_2 R_4 + R_1 R_3 R_4 + R_2 R_3 R_4}{(R_1 + R_2)(R_3 + R_4)} \end{aligned}$$

Therefore, the load resistance, R_L for maximum power transfer is

$$\boxed{\frac{R_1 R_2 R_3 + R_1 R_2 R_4 + R_1 R_3 R_4 + R_2 R_3 R_4}{(R_1 + R_2)(R_2 + R_4)}}.$$

Step 4 of 6

To find Thevenin's voltage, open the load resistor, the modified circuit is shown below.

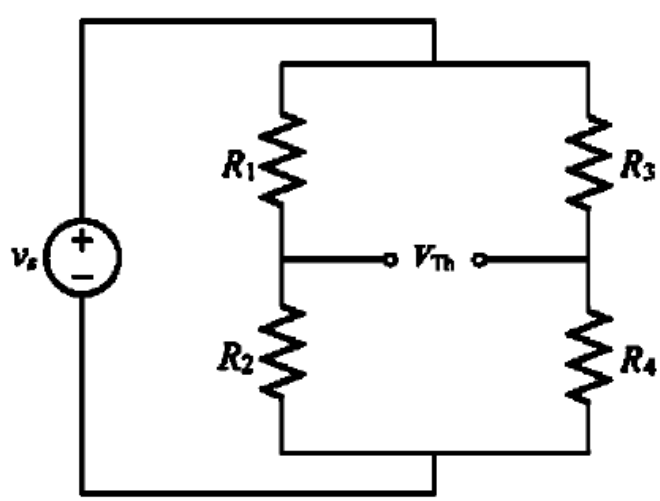

Step 5 of 6

Using voltage division rule, calculate the Thevenin's voltage from the above circuit.

$$
\begin{aligned}
V_{Th} &= V_{R_2} - V_{R_4} \\
&= \left[v_s\left(\frac{R_2}{R_1+R_2}\right)\right] - \left[v_s\left(\frac{R_4}{R_3+R_4}\right)\right] \\
&= v_s\left[\frac{R_2}{R_1+R_2} - \frac{R_4}{R_3+R_4}\right] \\
&= v_s\left[\frac{R_3R_2 + R_2R_4 - R_1R_4 - R_2R_4}{(R_1+R_2)(R_3+R_4)}\right] \\
&= v_s\left[\frac{R_2R_3 - R_1R_4}{(R_1+R_2)(R_3+R_4)}\right]
\end{aligned}
$$

Step 6 of 6

Calculate the maximum power absorbed by the load.

$$
\begin{aligned}
P_{max} &= \frac{V_{Th}^2}{4R_{Th}} \\
&= \frac{\left(v_s\left[\frac{R_2R_3 - R_1R_4}{(R_1+R_2)(R_3+R_4)}\right]\right)^2}{4\left(\frac{R_1R_2R_3 + R_1R_2R_4 + R_1R_3R_4 + R_2R_3R_4}{(R_1+R_2)(R_3+R_4)}\right)} \\
&= \frac{\left(v_s\left[R_2R_3 - R_1R_4\right]\right)^2}{4(R_1R_3R_3 + R_1R_2R_4 + R_1R_3R_4 + R_2R_3R_4)(R_1+R_2)(R_3+R_4)} \\
&= \frac{v_s^2\left[R_2R_3 - R_1R_4\right]^2}{4(R_1R_2R_3 + R_1R_2R_4 + R_1R_3R_4 + R_2R_3R_4)(R_1+R_2)(R_3+R_4)}
\end{aligned}
$$

Therefore, the maximum power, P_{max} absorbed by the load is

$$
\boxed{\frac{v_s^2\left[R_2R_3 - R_1R_4\right]^2}{4(R_1R_2R_3 + R_1R_2R_4 + R_1R_3R_4 + R_2R_3R_4)(R_1+R_2)(R_3+R_4)}}.
$$

Solution 4

(A) R_{TH} and V_{TH} are calculated using the circuits shown in fig(a) and (b) respectively.
From fig(a),

$$R_{TH} = 2 + 4 + 6 = 12\,Ohms \ .$$

From fig(b),

$$-V_{TH} + 12 + 8 + 20 = 0 \ , \quad V_{TH} = 40V \ .$$

Step 2 of 6

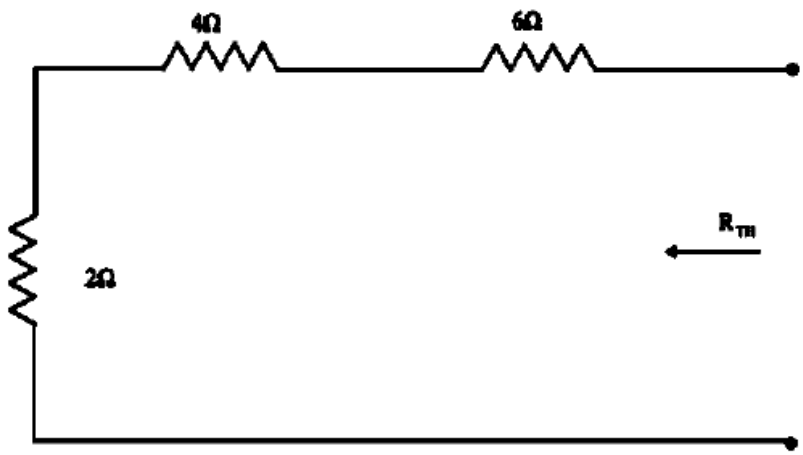

Step 3 of 6

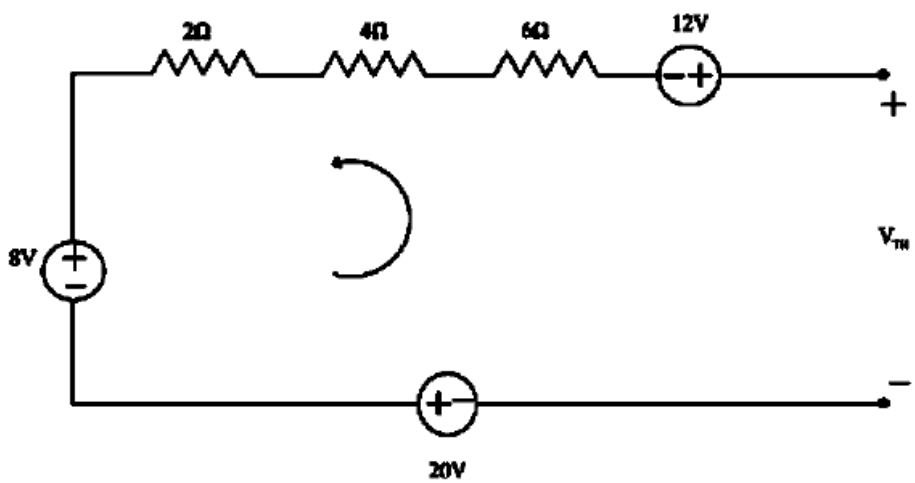

Step 4 of 6

(B) $$i = \frac{V_{TH}}{(R_{TH}+R)} = \frac{40}{12+8} = 2A .$$

Step 5 of 6

(C) For maximum power transfer,

$$R_L = R_{TH} = 12 Ohms .$$

Step 6 of 6

(D) $$P = \frac{V_{TH}^2}{4R_{TH}} = \frac{(40)^2}{(4\times12)} = 33.33 watts .$$

Solution 5

The following is the given circuit diagram:

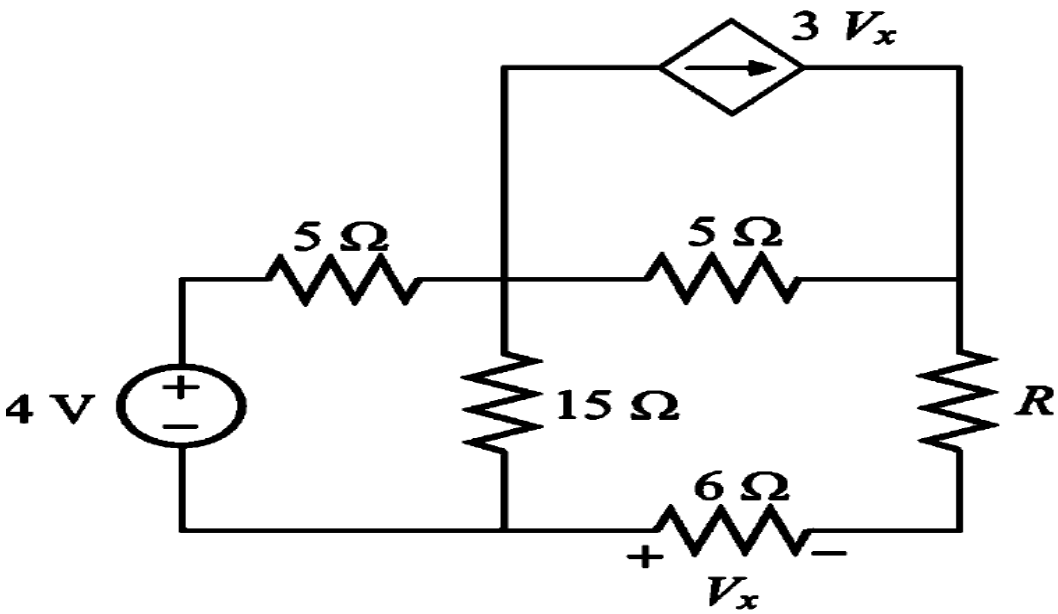

Step 2 of 8

To find Thevenin's voltage across the resistor R , first open the resistor R and modified circuit is shown in Figure 2.

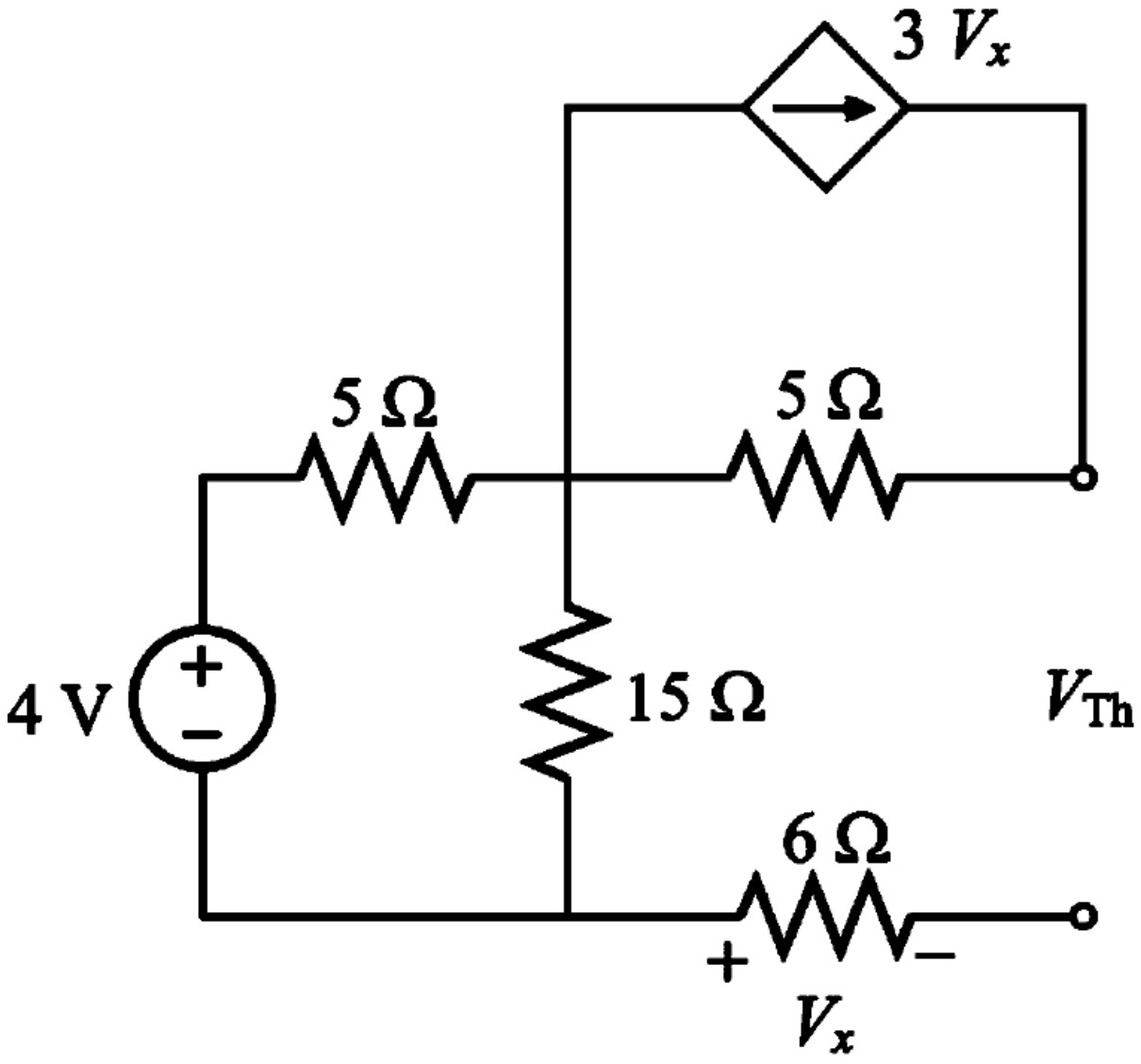

Step 3 of 8

From the Figure 2, the voltage V_x is zero. That is,

$$V_x = 0\,\text{V}$$

Apply voltage division rule, calculate the Thevenin's voltage.

$$\begin{aligned} V_{\text{Th}} &= \left(\frac{15}{15+5}\right)(4) \\ &= \frac{60}{20} \\ &= 3\,\text{V} \end{aligned}$$

Step 4 of 8

To find Thevenin's resistance, first short the resistor R and find short circuit current I_{sc} through shorted resistor. The modified circuit is shown below.

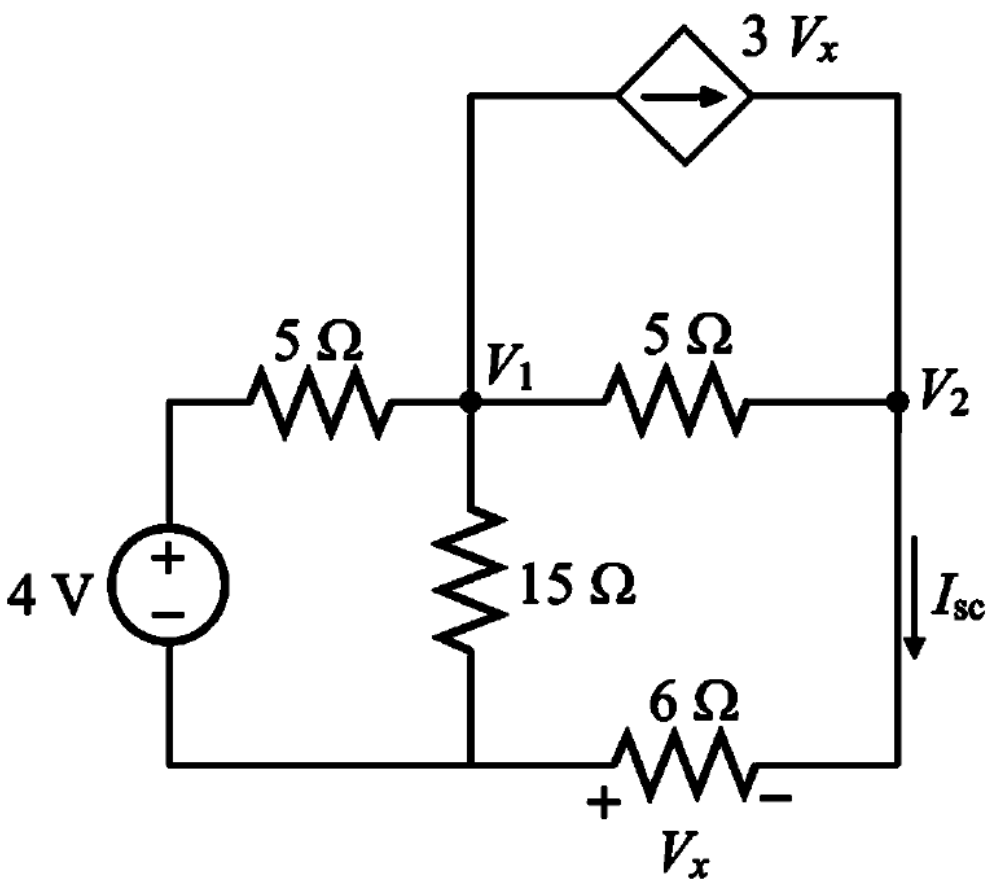

Figure 3

Step 5 of 8

Apply Kirchhoff's current law at node 1,

$$\frac{V_1-4}{5}+\frac{V_1}{15}+\frac{V_1-V_2}{5}+3V_x=0$$

But $V_x=-V_2$

$$\frac{V_1-4}{5}+\frac{V_1}{15}+\frac{V_1-V_2}{5}-3V_2=0$$

$$\left(\frac{1}{5}+\frac{1}{15}+\frac{1}{5}\right)V_1-\left(\frac{1}{5}+3\right)V_2=\frac{4}{5}$$

$$\left(\frac{3+1+3}{15}\right)V_1-\left(\frac{3+45}{15}\right)V_2=\frac{12}{15}$$

$7V_1-48V_2=12$ ..... (1)

Apply Kirchhoff's current law at node 2,

$$\frac{V_2-V_1}{5}+\frac{V_2-0}{6}-3V_x=0$$

$$-\frac{1}{5}V_1+\left(\frac{1}{5}+\frac{1}{6}+3\right)V_2=0$$

$$-\frac{1}{5}V_1+\left(\frac{6+5+90}{30}\right)V_2=0$$

$$\frac{1}{5}V_1=\frac{101}{30}V_2$$

$V_1=\left(\frac{101}{6}\right)V_2$ ..... (2)

Step 6 of 8

Substitute equation (2) in equation (1),

$$7\left(\frac{101}{6}\right)V_2 - 48V_2 = 12$$
$$(117.83 - 48)V_2 = 12$$
$$V_2 = \frac{12}{69.83}$$
$$V_2 = 0.1718\ \text{V}$$

Calculate the short circuit current.

$$\begin{aligned} I_{sc} &= -\frac{V_x}{6} \\ &= -\frac{(-V_2)}{6} \\ &= \frac{0.1718}{6} \\ &= 28.63\ \text{mA} \end{aligned}$$

Step 7 of 8

Calculate the Thevenin's equivalent resistance.

$$\begin{aligned} R_{Th} &= \frac{V_{Th}}{I_{sc}} \\ &= \frac{3}{28.63\times10^{-3}} \\ &= 104.75\ \Omega \end{aligned}$$

Hence for maximum power transfer, the load resistor is equal to the Thevenin's resistance. Therefore,

$$\begin{aligned} R &= R_{Th} \\ &= 104.75\ \Omega \end{aligned}$$

Step 8 of 8

Now, calculate the maximum power transferred to resistor R .

$$\begin{aligned} P_{max} &= \frac{V_{Th}^2}{4R} \\ &= \frac{3^2}{4(104.75)} \\ &= \frac{9}{419} \\ &= 21.48\ \text{mW} \end{aligned}$$

Therefore, the maximum power, P_{max} delivered to the resistor R is $\boxed{21.48\ \text{mW}}$.

Basic Electronics

Tutorial 6

1. For the circuit shown below, calculate the value of R that will make the energy stored in the capacitor the same as that stored in the inductor.

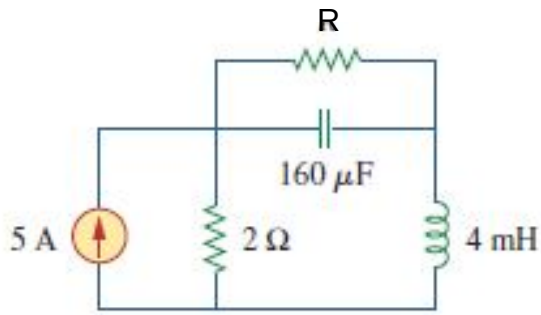

Figure 1:

2. In the figure shown below, switch has been closed for a long time and is opened at $t = 0$. Find i and v for all time.

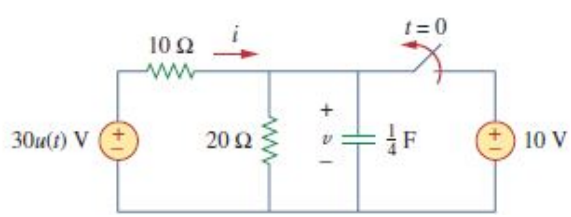

Figure 2:

3. For the circuit, find $i(t)$ for $t > 0$. Assume that the switch has been closed for a long time.

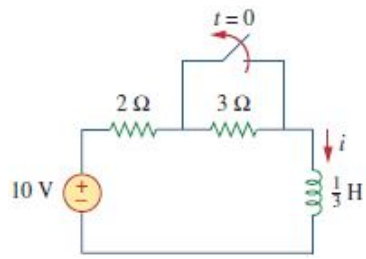

Figure 3:

4. Assuming that the switch shown in circuit below has been in positiion A for a long time and moved to position B at $t = 0$. Then at $t = 1$ second, the switch moves from B to C. Find $v_c(t)$ for $t \geq 0$.

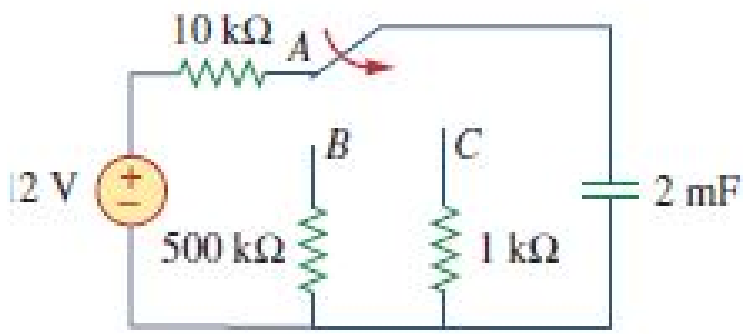

Figure 4:

Solution 1

Step 1 of 5

Consider the following circuit:

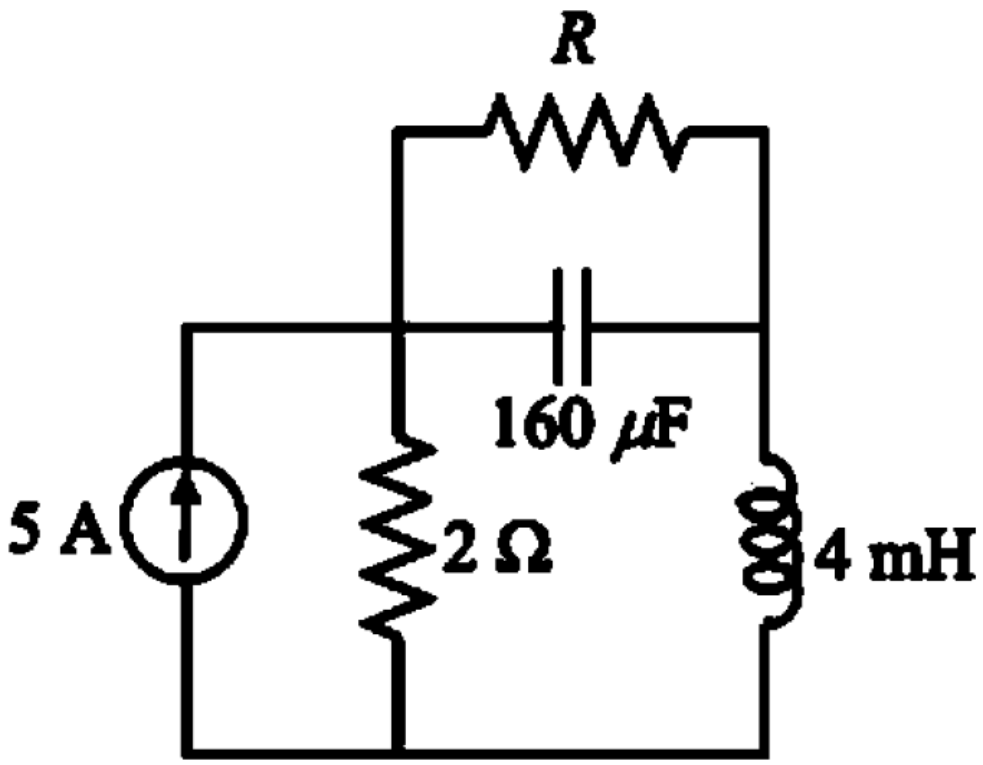

Figure 1

Step 2 of 5

Under dc conditions, the capacitor acts as an open circuit and an inductor acts as a short circuit. Redraw the circuit in Figure 1 under dc conditions.

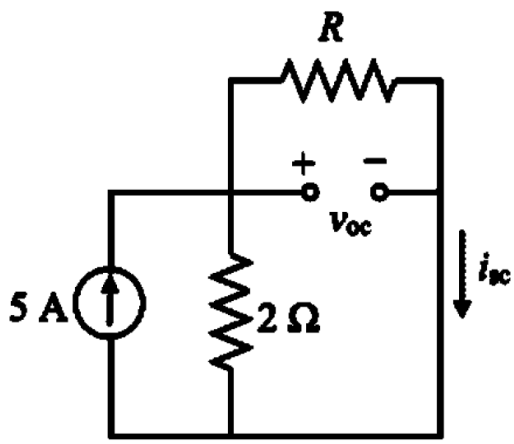

Figure 2

Step 3 of 5

Determine the short circuit current, i_{sc} using current division rule.

$$i_{sc} = (5)\left(\frac{2}{2+R}\right)$$
$$= \frac{10}{2+R}$$

Determine the open circuit voltage, which is the voltage across the resistance *R*.

$$v_{oc} = i_{sc}R$$
$$= \frac{10R}{2+R}$$

Step 4 of 5

Determine the energy stored in the inductor under dc conditions.

$$\begin{aligned} w_L &= \frac{1}{2}Li_\infty^2 \\ &= \frac{1}{2}\left(4\times10^{-3}\right)\left(\frac{10}{2+R}\right)^2 \\ &= \frac{0.2}{(2+R)^2} \end{aligned}$$

Determine the energy stored in the capacitor under dc conditions.

$$\begin{aligned} w_C &= \frac{1}{2}Cv_\infty^2 \\ &= \frac{1}{2}\left(160\times10^{-6}\right)\left(\frac{10R}{2+R}\right)^2 \\ &= \frac{8\times10^{-3}R^2}{(2+R)^2} \end{aligned}$$

Step 5 of 5

To determine the value of *R* at which the energy stored in the inductor is equal to the energy stored in the capacitor under dc conditions, equate both energies.

$$\frac{0.2}{(2+R)^2} = \frac{8\times10^{-3}R^2}{(2+R)^2}$$

$$0.2 = 8\times10^{-3}R^2$$

$$R^2 = \frac{0.2}{8\times10^{-3}}$$

$$R^2 = 25$$

$$R = 5\,\Omega$$

Thus, the value of resistance *R* that makes the energy stored in the capacitor equal to that stored in the inductor under dc conditions is $\boxed{5\,\Omega}$.

Solution 2

When $t < 0$, the 3-Ω resistor is short-circuited, and the inductor acts like a short circuit. The current through the inductor at $t = 0^-$ (i.e., just before $t = 0$) is

$$i(0^-) = \frac{10}{2} = 5 \text{ A}$$

Since the inductor current cannot change instantaneously,

$$i(0) = i(0^+) = i(0^-) = 5 \text{ A}$$

When $t > 0$, the switch is open. The 2-Ω and 3-Ω resistors are in series, so that

$$i(\infty) = \frac{10}{2+3} = 2 \text{ A}$$

The Thevenin resistance across the inductor terminals is

$$R_{\text{Th}} = 2 + 3 = 5\ \Omega$$

For the time constant,

$$\tau = \frac{L}{R_{\text{Th}}} = \frac{\frac{1}{3}}{5} = \frac{1}{15} \text{ s}$$

Thus,

$$\begin{aligned} i(t) &= i(\infty) + [i(0) - i(\infty)]e^{-t/\tau} \\ &= 2 + (5-2)e^{-15t} = 2 + 3e^{-15t} \text{ A}, \qquad t > 0 \end{aligned}$$

Check: In Fig. 7.51, for $t > 0$, KVL must be satisfied; that is,

$$10 = 5i + L\frac{di}{dt}$$

$$5i + L\frac{di}{dt} = [10 + 15e^{-15t}] + \left[\frac{1}{3}(3)(-15)e^{-15t}\right] = 10$$

This confirms the result.

Solution 3

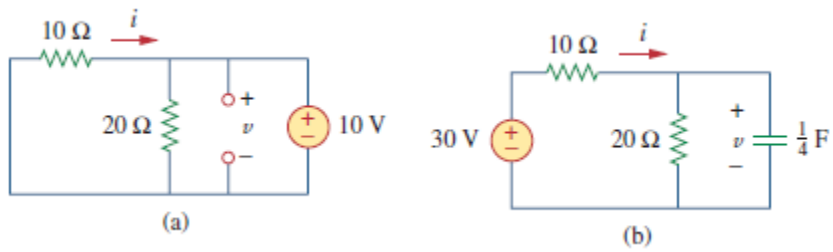

(a) for $t < 0$, (b) for $t > 0$.

The resistor current i can be discontinuous at $t = 0$, while the capacitor voltage v cannot. Hence, it is always better to find v and then obtain i from v.

By definition of the unit step function,

$$30u(t) = \begin{cases} 0, & t < 0 \\ 30, & t > 0 \end{cases}$$

For $t < 0$, the switch is closed and $30u(t) = 0$, so that the $30u(t)$ voltage source is replaced by a short circuit and should be regarded as contributing nothing to v. Since the switch has been closed for a long time, the capacitor voltage has reached steady state and the capacitor acts like an open circuit. Hence, the circuit becomes that shown in Fig. (a) for $t < 0$. From this circuit we obtain

$$v = 10 \text{ V}, \qquad i = -\frac{v}{10} = -1 \text{ A}$$

Since the capacitor voltage cannot change instantaneously,

$$v(0) = v(0^-) = 10 \text{ V}$$

For $t > 0$, the switch is opened and the 10-V voltage source is disconnected from the circuit. The $30u(t)$ voltage source is now operative, so the circuit becomes that shown in Fig. (b). After a long time, the circuit reaches steady state and the capacitor acts like an open circuit again. We obtain $v(\infty)$ by using voltage division, writing

$$v(\infty) = \frac{20}{20 + 10}(30) = 20 \text{ V}$$

Solution 4

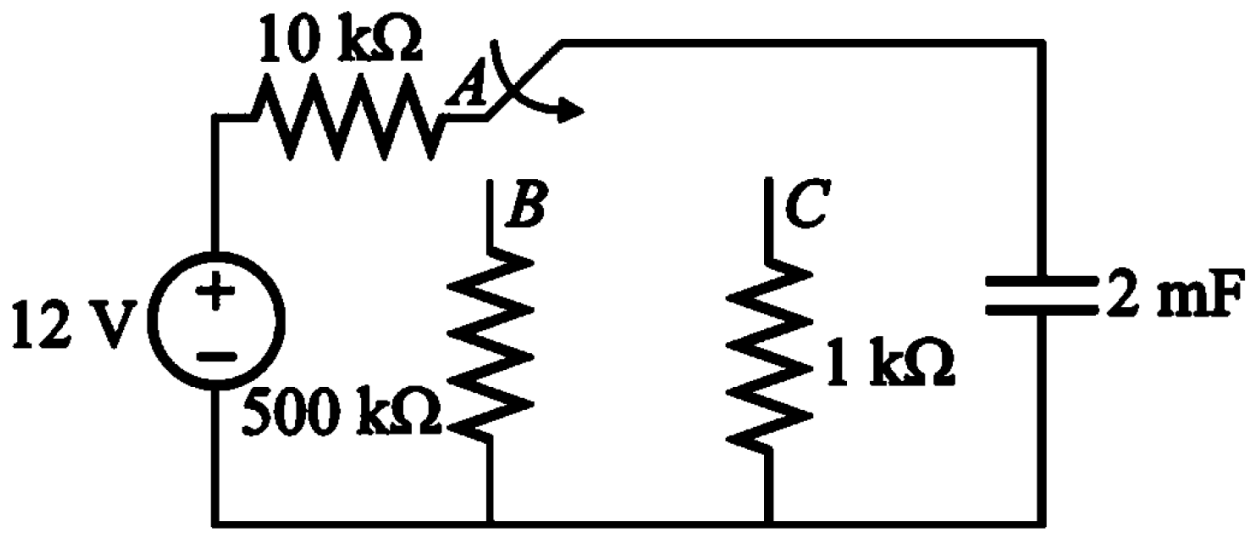

Figure 1

Step 2 of 8

At $t = 0^-$, the switch in the circuit at position A and capacitor acts as open circuit. Draw the modified circuit diagram:

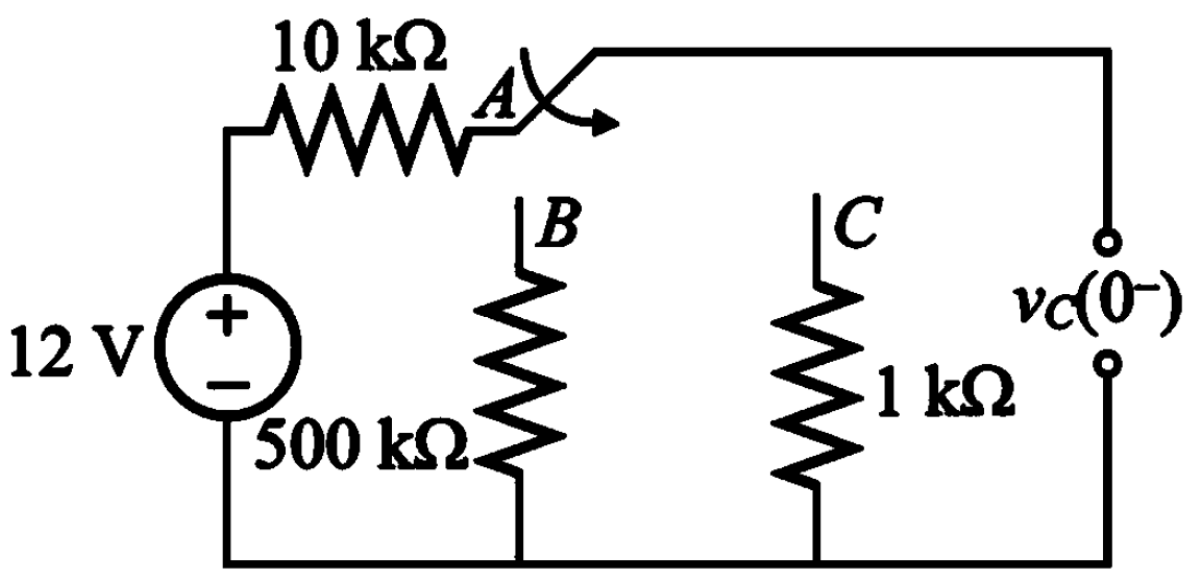

Figure 2

Step 3 of 8

The capacitor in the circuit shown in Figure 2 is open circuit, so no current flows through the circuit. Therefore the initial voltage across the capacitor is 12 V.

$$v_c(0^-) = 12\text{ V}$$

Step 4 of 8

The voltage across the capacitor cannot change instantaneously.

$$\begin{aligned} v_c(0^-) &= v_c(0^+) \\ &= v_c(0) \\ &= 12\text{ V} \end{aligned}$$

Step 5 of 8

At $t > 0$, the switch in the circuit shown in Figure 1 moves to position B. draw the modified circuit diagram:

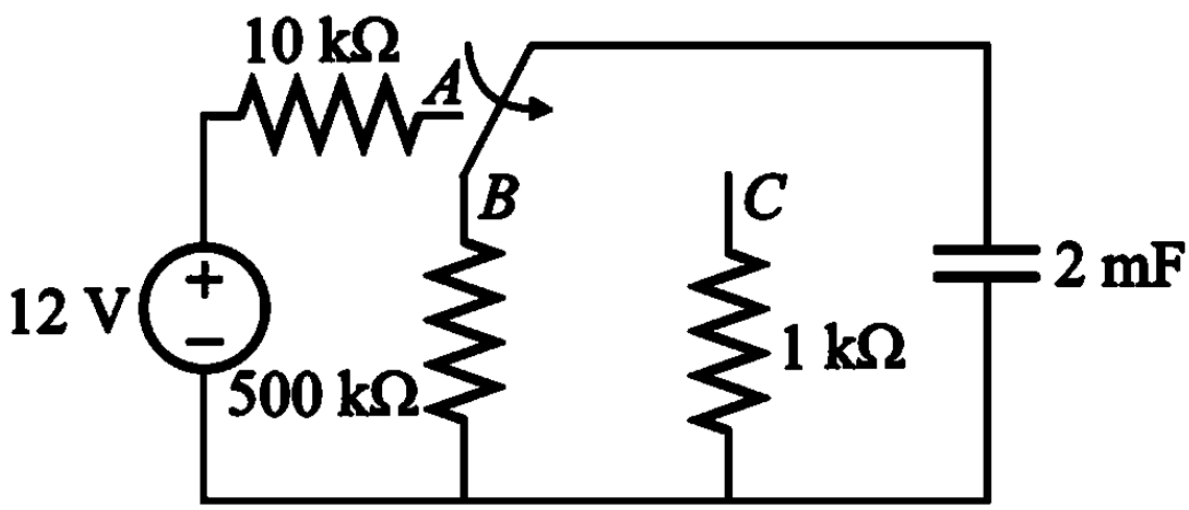

Figure 3

Step 6 of 8

Now the circuit shown in Figure 3 is source free circuit. Write general expression for the first order source free RC circuit.

$$v_C(t) = v_C(0)e^{-\frac{t}{\tau}}$$

Write an expression for time constant of RC circuit.

$$\tau = R_{eq}C$$

From the circuit shown in Figure 3, the value of equivalent resistance is $500\ \text{k}\Omega$.

Calculate the value of time constant.

$$\begin{aligned}\tau &= R_{eq}C \\ &= (500\times10^3)(2\times10^{-3}) \\ &= 1000\ \text{s}\end{aligned}$$

Substitute $12\ \text{V}$ for $v_C(0)$ and $1000\ \text{s}$ for τ in the voltage expression.

$$\begin{aligned}v_C(t>0) &= v_C(0)e^{-\frac{t}{\tau}} \\ &= 12e^{-\frac{t}{1000}} \\ &= 12e^{-10^{-3}t}\ \text{V}\end{aligned}$$

At $t = 1\ \text{s}$, the switch in the circuit is now moved to position C. draw the modified circuit diagram:

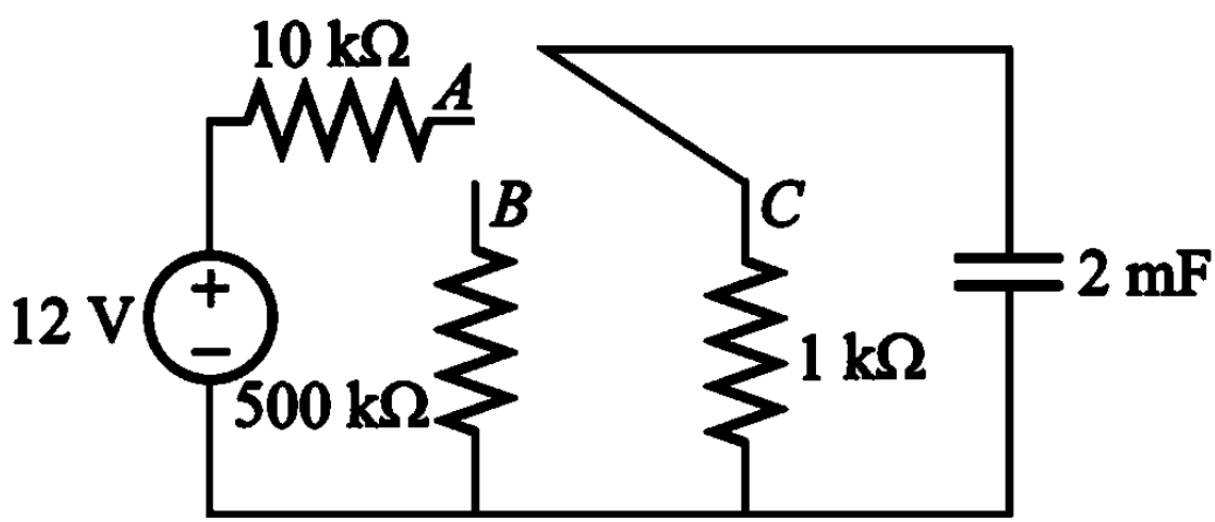

Figure 4

Step 7 of 8

Calculate the voltage across the capacitor at $t = 1\,\text{s}$.

$$\begin{aligned} v_C(1) &= 12e^{-10^{-3}} \\ &= (12)(0.999) \\ &= 11.98\,\text{V} \end{aligned}$$

Similarly, the circuit shown in Figure 4 is also a source free circuit. Write general expression for the first order source free RC circuit.

$$v_C(t) = v_C(1)e^{-\frac{t-1}{\tau}}$$

Write an expression for time constant of RC circuit.

$$\tau = R_{eq}C$$

From the circuit shown in Figure 4, the value of equivalent resistance is $1\,\text{k}\Omega$.

Step 8 of 8

Calculate the value of time constant.

$$\begin{aligned} \tau &= R_{eq}C \\ &= \left(1\times10^{3}\right)\left(2\times10^{-3}\right) \\ &= 2\,\text{s} \end{aligned}$$

Substitute $11.98\,\text{V}$ for $v_C(1)$ and $2\,\text{s}$ for τ in the voltage expression.

$$\begin{aligned} v_C(t>1) &= v_C(1)e^{-\frac{t-1}{\tau}} \\ &= 11.98e^{-\frac{t-1}{2}} \\ &= 11.98e^{-0.5(t-1)}\,\text{V} \end{aligned}$$

Therefore, the voltage across the capacitor, $v_C(t)$ for $t > 1\,\text{s}$ is

$$\boxed{\begin{array}{ll} 12e^{-10^{-3}t}\,\text{V} & \text{for } 0<t<1\,\text{s} \\ 11.98e^{-0.5(t-1)}\,\text{V} & \text{for } 1\,\text{s}<t<\infty \end{array}}.$$

Basic Electronics

Tutorial 7

1. The switch in the circuit shown below has been closed for a long time and opened at $t = 0$. Find

   (a) $i(0_+)$

   (b) $v(0_+)$

   (c) $\frac{di(0_+)}{dt}$

   (d) $\frac{dv(0_+)}{dt}$

   (e) $i(\infty)$

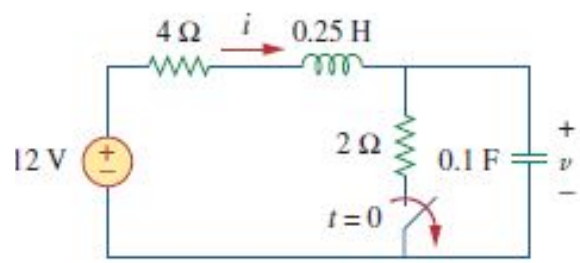

Figure 1:

2. For the RLC circuit shown below, find v(t) for $t > 0$.

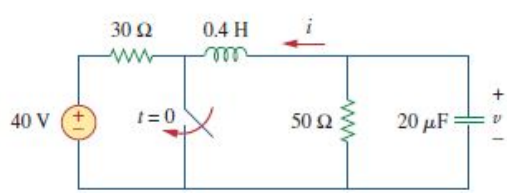

Figure 2:

3. For the circuit shown below, find $i(t)$ for $t > 0$. Assume that the switch has been closed for a long time.

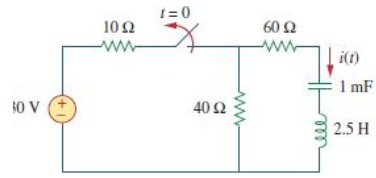

Figure 3:

4. Assuming that the switch shown in circuit below closed for a long time and opened at $t = 0$. Determine $i(t)$ for $t > 0$.

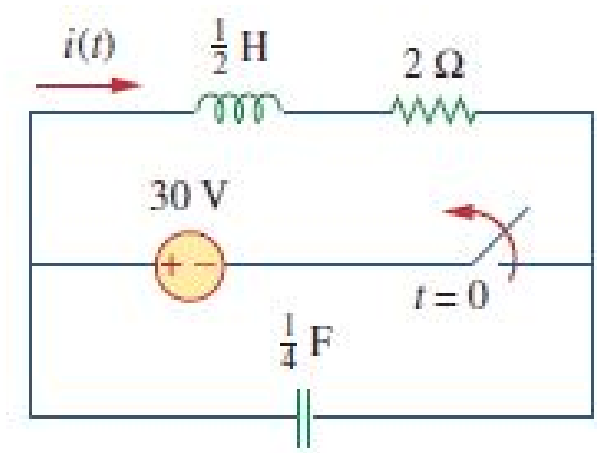

Figure 4:

Solution 1

(a) If the switch is closed a long time before $t = 0$, it means that the circuit has reached dc steady state at $t = 0$. At dc steady state, the inductor acts like a short circuit, while the capacitor acts like an open circuit, so we have the circuit in Fig. 8.3(a) at $t = 0^-$. Thus,

$$i(0^-) = \frac{12}{4+2} = 2\text{ A}, \qquad v(0^-) = 2i(0^-) = 4\text{ V}$$

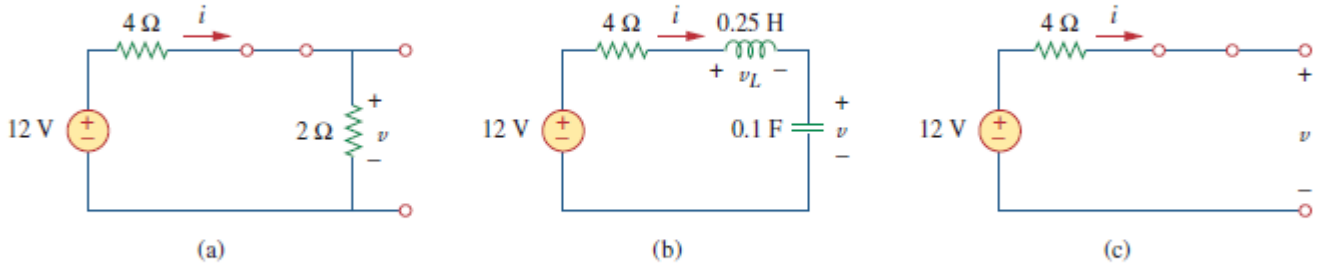

Figure 8.3
Equivalent circuit of that in Fig. 8.2 for: (a) $t = 0^-$, (b) $t = 0^+$, (c) $t \to \infty$.

As the inductor current and the capacitor voltage cannot change abruptly,

$$i(0^+) = i(0^-) = 2 \text{ A}, \qquad v(0^+) = v(0^-) = 4 \text{ V}$$

(b) At $t = 0^+$, the switch is open; the equivalent circuit is as shown in Fig. 8.3(b). The same current flows through both the inductor and capacitor. Hence,

$$i_C(0^+) = i(0^+) = 2 \text{ A}$$

Since $C\,dv/dt = i_C$, $dv/dt = i_C/C$, and

$$\frac{dv(0^+)}{dt} = \frac{i_C(0^+)}{C} = \frac{2}{0.1} = 20 \text{ V/s}$$

Similarly, since $L\,di/dt = v_L$, $di/dt = v_L/L$. We now obtain v_L by applying KVL to the loop in Fig. 8.3(b). The result is

$$-12 + 4i(0^+) + v_L(0^+) + v(0^+) = 0$$

or

$$v_L(0^+) = 12 - 8 - 4 = 0$$

Thus,

$$\frac{di(0^+)}{dt} = \frac{v_L(0^+)}{L} = \frac{0}{0.25} = 0 \text{ A/s}$$

(c) For $t > 0$, the circuit undergoes transience. But as $t \to \infty$, the circuit reaches steady state again. The inductor acts like a short circuit and the capacitor like an open circuit, so that the circuit in Fig. 8.3(b) becomes that shown in Fig. 8.3(c), from which we have

$$i(\infty) = 0 \text{ A}, \qquad v(\infty) = 12 \text{ V}$$

Solution 2

Solution:

When $t < 0$, the switch is open; the inductor acts like a short circuit while the capacitor behaves like an open circuit. The initial voltage across the capacitor is the same as the voltage across the 50-Ω resistor; that is,

$$v(0) = \frac{50}{30 + 50}(40) = \frac{5}{8} \times 40 = 25 \text{ V} \qquad \textbf{(8.6.1)}$$

The initial current through the inductor is

$$i(0) = -\frac{40}{30 + 50} = -0.5 \text{ A}$$

The direction of i is as indicated in Fig. 8.15 to conform with the direction of I_0 in Fig. 8.13, which is in agreement with the convention that current flows into the positive terminal of an inductor (see Fig. 6.23). We need to express this in terms of dv/dt, since we are looking for v.

$$\frac{dv(0)}{dt} = -\frac{v(0) + Ri(0)}{RC} = -\frac{25 - 50 \times 0.5}{50 \times 20 \times 10^{-6}} = 0 \qquad \textbf{(8.6.2)}$$

When $t > 0$, the switch is closed. The voltage source along with the 30-Ω resistor is separated from the rest of the circuit. The parallel RLC circuit acts independently of the voltage source, as illustrated in Fig. 8.16. Next, we determine that the roots of the characteristic equation are

$$\alpha = \frac{1}{2RC} = \frac{1}{2 \times 50 \times 20 \times 10^{-6}} = 500$$

$$\omega_0 = \frac{1}{\sqrt{LC}} = \frac{1}{\sqrt{0.4 \times 20 \times 10^{-6}}} = 354$$

$$s_{1,2} = -\alpha \pm \sqrt{\alpha^2 - \omega_0^2}$$

$$= -500 \pm \sqrt{250{,}000 - 124{,}997.6} = -500 \pm 354$$

or

$$s_1 = -854, \qquad s_2 = -146$$

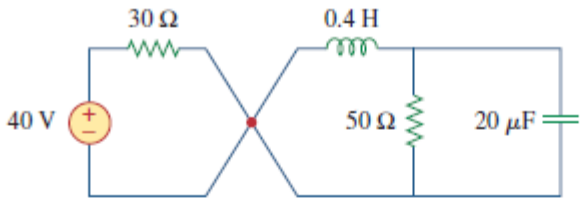

Since $\alpha > \omega_0$, we have the overdamped response

$$v(t) = A_1 e^{-854t} + A_2 e^{-146t} \tag{8.6.3}$$

At $t = 0$, we impose the condition in Eq. (8.6.1),

$$v(0) = 25 = A_1 + A_2 \quad \Rightarrow \quad A_2 = 25 - A_1 \tag{8.6.4}$$

Taking the derivative of $v(t)$ in Eq. (8.6.3),

$$\frac{dv}{dt} = -854A_1 e^{-854t} - 146A_2 e^{-146t}$$

Imposing the condition in Eq. (8.6.2),

$$\frac{dv(0)}{dt} = 0 = -854A_1 - 146A_2$$

or

$$0 = 854A_1 + 146A_2 \tag{8.6.5}$$

Solving Eqs. (8.6.4) and (8.6.5) gives

$$A_1 = -5.156, \qquad A_2 = 30.16$$

Thus, the complete solution in Eq. (8.6.3) becomes

$$v(t) = -5.156e^{-854t} + 30.16e^{-146t} \text{ V}$$

Solution 3

Consider the following circuit diagram:

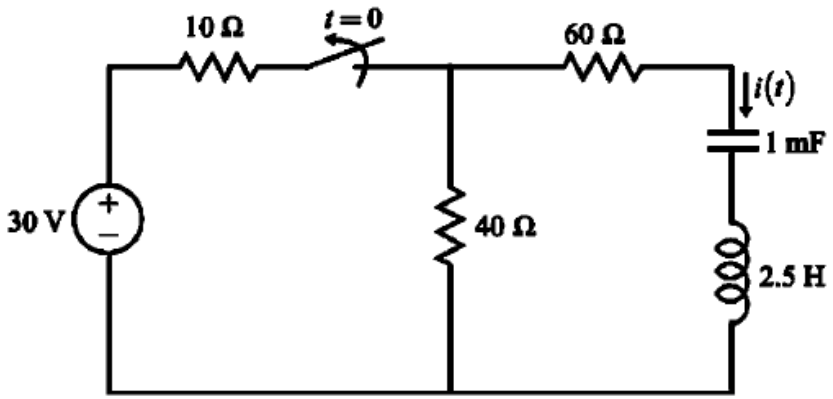

Figure 1

Step 2 of 9

For $t<0$ the switch is in closed position and circuit acts under steady state condition. At $t=0^-$ inductor acts like a short circuit and capacitor acts like an open circuit. Hence, modified circuit is shown in Figure 2.

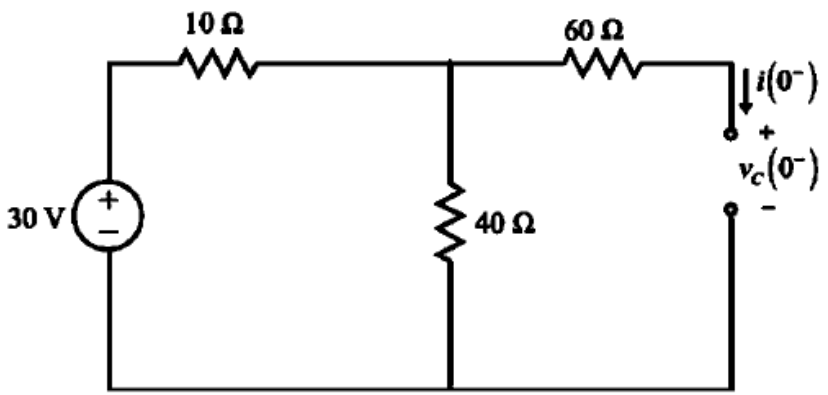

Figure 2

Step 3 of 9

From the Figure 2, the inductor current is,

$$i(0^-)=0\text{ A}$$

Calculate the voltage across the open circuit terminals.

$$\begin{aligned} v_c(0^-) &= (30)\left(\frac{40}{40+10}\right) \\ &= (30)\left(\frac{40}{50}\right) \\ &= 24\text{ V} \end{aligned}$$

Since the inductor current and capacitor voltage cannot change instantaneously.

$$\begin{aligned} v(0) &= v(0^-) \\ &= 24\text{ V} \end{aligned}$$

And

$$\begin{aligned} i(0) &= i(0^-) \\ &= 0\text{ A} \end{aligned}$$

Step 4 of 9

For $t>0$, the switch is opened, therefore the equivalent circuit is shown in Figure 3.

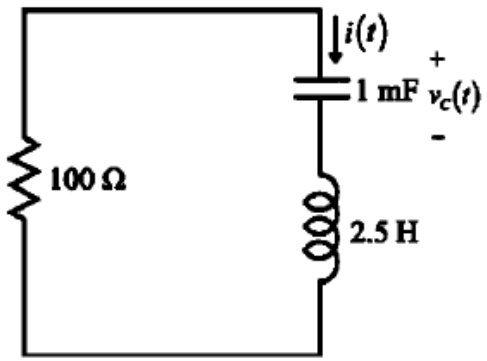

Figure 3

Step 5 of 9

Apply Kirchhoff's voltage law to loop in Figure 3.

$$Ri(t)+v_C(t)+L\frac{di(t)}{dt}=0 \text{ ..... (1)}$$

From the figure 3, the current through capacitor is,

$$i(t)=C\frac{dv_C(t)}{dt} \text{ ..... (2)}$$

Substitute equation (2) in equation (1).

$$R\left(C\frac{dv_C(t)}{dt}\right)+v_C(t)+L\frac{d\left(C\frac{dv_C(t)}{dt}\right)}{dt}=0$$

$$RC\frac{dv_C(t)}{dt}+LC\frac{d^2v_C(t)}{dt^2}+v_C(t)=0$$

$$\frac{d^2v_C(t)}{dt^2}+\frac{R}{L}\frac{dv_C(t)}{dt}+\frac{1}{LC}v_C(t)=0$$

Step 6 of 9

Calculate the neper frequency (α) from the differential equation.

$$\begin{aligned}\alpha&=\frac{R}{2L}\\&=\frac{100}{(2)(2.5)}\\&=20\text{ rad/sec}\end{aligned}$$

Calculate the resonant frequency.

$$\begin{aligned}\omega_0&=\frac{1}{\sqrt{LC}}\\&=\frac{1}{\sqrt{(10^{-3}\times 2.5)}}\\&=20\text{ rad/sec}\end{aligned}$$

Since $\alpha=\omega_0$, the circuit is critically damped. Therefore, the response is,

$$v_C(t)=(A_1+A_2t)e^{-20t} \text{ ..... (3)}$$

Step 7 of 9

Substitute $t=0$ in equation (3).

$$\begin{aligned}&v_C(0)=(A_1+A_2(0))e^{-20(0)}\\&24=A_1 \qquad (\text{Since, } v_C(0)=24\text{ V})\\&A_1=24\end{aligned}$$

Differentiate the equation (3) with respect to t .

$$\frac{dv_C(t)}{dt}=-20A_1e^{-20t}+A_2\left(e^{-20t}-20te^{-20t}\right) \text{ ..... (4)}$$

Substitute $t=0$ in equation (4).

$$\frac{dv_C(0)}{dt}=-20A_1e^{-20(0)}+A_2\left(e^{-20(0)}-20(0)e^{-20(0)}\right)$$

$$\frac{dv_C(0)}{dt}=-20A_1+A_2 \text{ ..... (5)}$$

Step 8 of 9

Current through the capacitor at $t=0$ is,

$$\begin{aligned}&i(0)=C\frac{dv_C(0)}{dt}\\&\frac{dv_C(0)}{dt}=\frac{i(0)}{C}\\&\frac{dv_C(0)}{dt}=\frac{0}{C}\\&\frac{dv_C(0)}{dt}=0\end{aligned}$$

Substitute 0 for $\frac{dv_C(0)}{dt}$ in equation (5), to obtain the value of A_2 .

$$0 = -20(24) + A_2$$
$$A_2 = 20(24)$$
$$A_2 = 480$$

Therefore, the expression for voltage across capacitor for $t > 0$ is,

$$v_C(t) = (24 + 480t)e^{-20t} \text{ V}$$

Calculate the current through the inductor for $t > 0$.

$$\begin{aligned} i(t) &= C\frac{dv_C(t)}{dt} \\ &= (1\times10^{-3})\frac{d\left((24+480t)e^{-20t}\right)}{dt} \\ &= (1\times10^{-3})\left\{-480e^{-20t} + 480\left(e^{-20t} - 20te^{-20t}\right)\right\} \\ &= (1\times10^{-3})\left[-9600te^{-20t}\right] \end{aligned}$$

$$= -9.6te^{-20t} \text{ A}$$

Therefore, the expression for current, $i(t)$ for $t > 0$ is $\boxed{-9.6te^{-20t} \text{ A}}$.

Solution 4

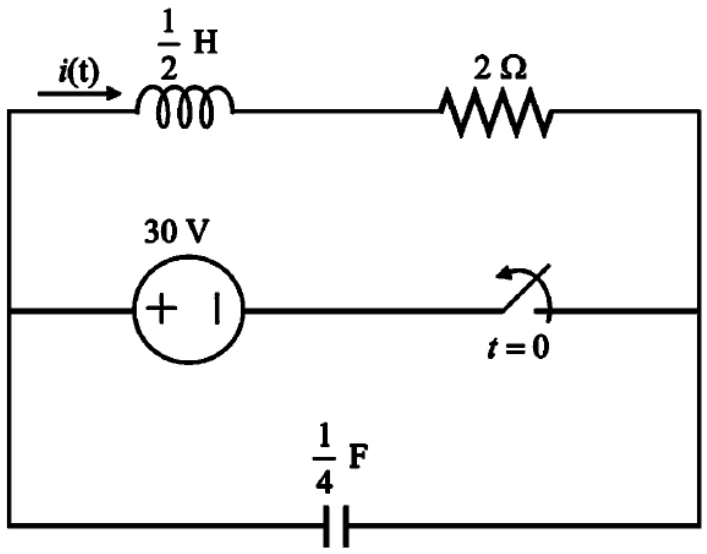

Figure 1

Step 2 of 9

For $t<0$, switch is closed, the circuit reaches steady state. Inductor acts as short circuited and capacitor acts as open circuited. Hence the circuit becomes as follows:

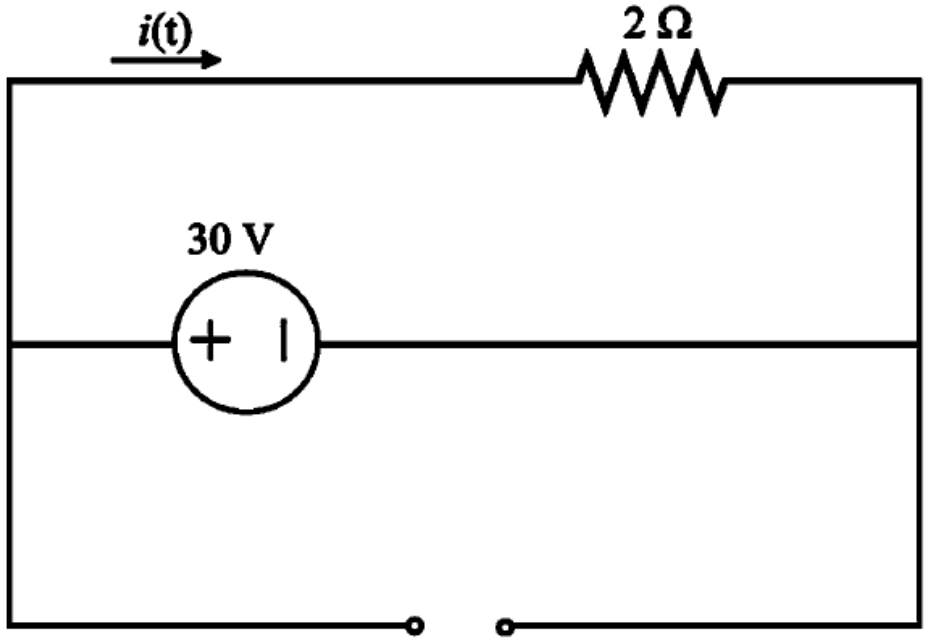

Figure 2

Step 3 of 9

Use Ohm's law to find $i(0)$.

$$i(0)=\frac{30}{2}$$
$$=15\text{ A}$$

Hence, $i(0)=15\text{ A}$.

The steady state current is, $I_s=15\text{ A}$.

Step 4 of 9

For $t > 0$, switch is opened hence the circuit will become as follows:

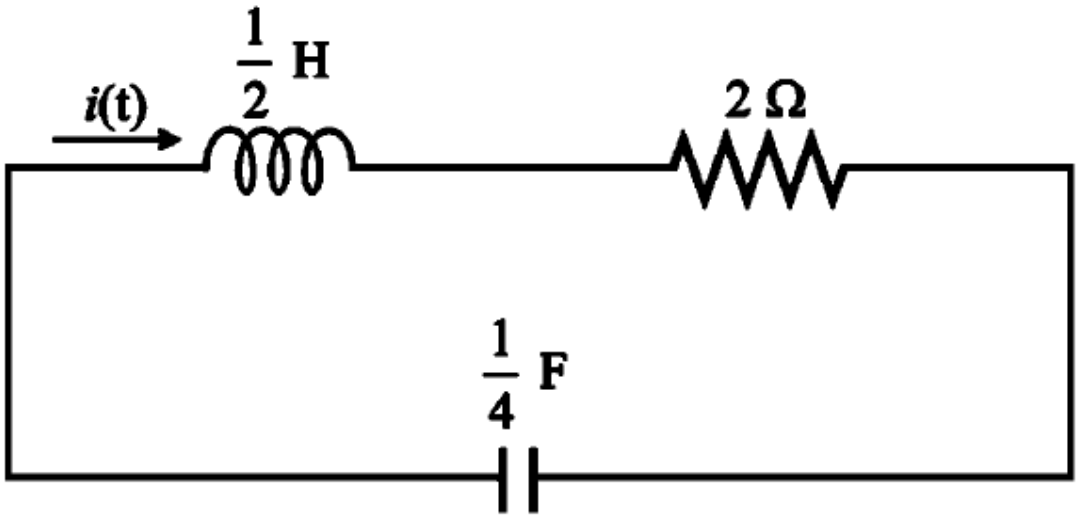

Figure 3

Step 5 of 9

From the Figure 3, it is clear that the circuit is a RLC series circuit.

Calculate the response.

$$\begin{aligned}\alpha &= \frac{R}{2L}\\ &= \frac{2}{(2)\left(\frac{1}{2}\right)}\\ &= 2\end{aligned}$$

Where,

α is neper frequency or damping factor.

Step 6 of 9

Calculate the resonant frequency.

$$\begin{aligned}\omega_0 &= \frac{1}{\sqrt{LC}}\\ &= \frac{1}{\sqrt{\left(\frac{1}{2}\right)\left(\frac{1}{4}\right)}}\\ &= \sqrt{8}\end{aligned}$$

Step 7 of 9

Calculate the damped frequency.

$$\begin{aligned}\omega_d &= \sqrt{\omega_0^2 - \alpha^2}\\ &= \sqrt{(2.828)^2 - 2^2}\\ &= \sqrt{8-4}\\ &= 2\end{aligned}$$

For $t > 0$, the circuit is a source-free circuit.

$$I_s = 0\text{ A}$$

As $\alpha < \omega_0$ the response is under-damped.

$$i(t) = I_s + e^{-\alpha t}\left(A_1 \cos\omega_d t + A_2 \sin\omega_d t\right)\text{ A}$$

Substitute 0 A for I_s , 2 for α and 2 for ω_d in above equation.

$$i(t) = 0 + e^{-2t}\left(A_1 \cos 2t + A_2 \sin 2t\right)\text{ A}$$

$$i(t) = e^{-2t}\left(A_1 \cos 2t + A_2 \sin 2t\right)\text{ A} \quad \text{..... (1)}$$

For $t = 0$,

$$\begin{aligned}i(0) &= e^{-2(0)}\left(A_1 \cos 2(0) + A_2 \sin 2(0)\right)\\ &= A_1\end{aligned}$$

Substitute 15 for $i(0)$ in the equation.

$$\begin{aligned}15 &= A_1\\ A_1 &= 15\end{aligned}$$

Step 8 of 9

Write the expression for current through inductor.

$$i(t)=\frac{1}{L}\int v_L(t)dt$$

$$\frac{di}{dt}=\frac{v_L(t)}{L}$$

$$\begin{aligned}\frac{di(0)}{dt}&=\frac{v_L(0)}{L}\\&=\frac{0}{\frac{1}{2}}\\&=0\text{ A/s}\end{aligned}$$

Step 9 of 9

Differentiate equation (1), $i(t)=e^{-2t}\left(A_1\cos 2t+A_2\sin 2t\right)$

$$\begin{aligned}\frac{di(t)}{dt}&=e^{-2t}\left(-2A_1\sin 2t+2A_2\cos 2t\right)-2e^{-2t}\left(A_1\cos 2t+A_2\sin 2t\right)\\&=e^{-2t}\left(-2A_1\sin 2t+2A_2\cos 2t-2A_1\cos 2t-2A_2\sin 2t\right)\end{aligned}$$

At $t=0$.

$$\frac{di(0)}{dt}=e^{-2(0)}\left(-2A_1\sin 2(0)+2A_2\cos 2(0)-2A_1\cos 2(0)-2A_2\sin 2(0)\right)$$

$$0=2A_2-2A_1$$

$$A_2=A_1$$

Substitute 15 for A_1 and 15 for A_2 in $i(t)=e^{-2t}\left(A_1\cos 2t+A_2\sin 2t\right)$.

$$\begin{aligned}i(t)&=e^{-2t}\left(15\cos 2t+15\sin 2t\right)\\&=15e^{-2t}\left(\cos 2t+\sin 2t\right)\text{ A}\end{aligned}$$

Hence, the current $i(t)$ for $t>0$ is $\boxed{15e^{-2t}\left(\cos 2t+\sin 2t\right)\text{ A}}$.

Tutorial 8

Q1: For the circuit shown below, find v (t) and i (t) for t > 0. Consider these cases: R = 5 Ω 2) R = 4 Ω, and R = 1Ω.

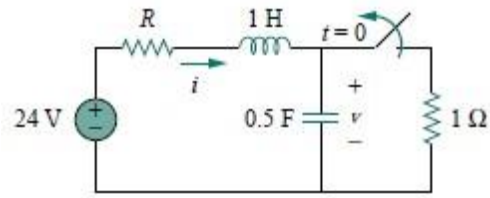

Q2: Find v_o (t) for t > 0 for the circuit shown below.

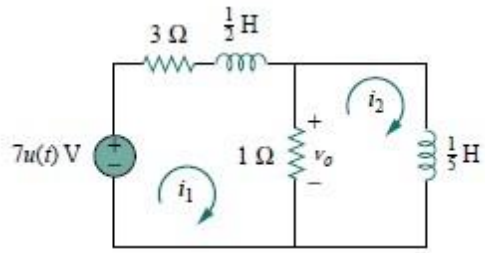

Q3: In the circuit shown below *i(0)* =1A and *v(0)*=0. Find the current *i(t)* for t>0 is

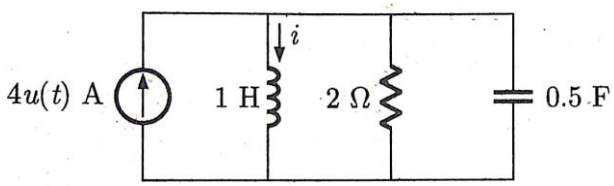

Q4: Using phasor notation find input impedance of the circuit. Assume the circuit operates at 50 rad/s.

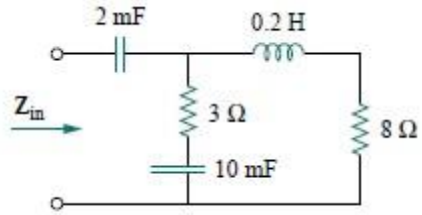

Tutorial Solutions 8

Q1:

Solution:

CASE I When $R = 5\ \Omega$. For $t < 0$, the switch is closed. The capacitor behaves like an open circuit while the inductor acts like a short circuit. The initial current through the inductor is

$$i(0) = \frac{24}{5+1} = 4\text{ A}$$

and the initial voltage across the capacitor is the same as the voltage across the 1-Ω resistor; that is,

$$v(0) = 1i(0) = 4\text{ V}$$

For $t > 0$, the switch is opened, so that we have the 1-Ω resistor disconnected. What remains is the series RLC circuit with the voltage source. The characteristic roots are determined as follows.

$$\alpha = \frac{R}{2L} = \frac{5}{2\times 1} = 2.5, \qquad \omega_0 = \frac{1}{\sqrt{LC}} = \frac{1}{\sqrt{1\times 0.25}} = 2$$

$$s_{1,2} = -\alpha \pm \sqrt{\alpha^2 - \omega_0^2} = -1, -4$$

Since $\alpha > \omega_0$, we have the overdamped natural response. The total response is therefore

$$v(t) = v_f + (A_1e^{-t} + A_2e^{-4t})$$

where v_f is the forced or steady-state response. It is the final value of the capacitor voltage. In Fig. 8.19, $v_f = 24$ V. Thus,

$$v(t) = 24 + (A_1e^{-t} + A_2e^{-4t}) \tag{8.7.1}$$

We now need to find A_1 and A_2 using the initial conditions.

$$v(0) = 4 = 24 + A_1 + A_2$$

or

$$-20 = A_1 + A_2 \tag{8.7.2}$$

The current through the inductor cannot change abruptly and is the same current through the capacitor at $t = 0^+$ because the inductor and capacitor are now in series. Hence,

$$i(0) = C\frac{dv(0)}{dt} = 4 \qquad \Longrightarrow \qquad \frac{dv(0)}{dt} = \frac{4}{C} = \frac{4}{0.25} = 16$$

Before we use this condition, we need to take the derivative of v in Eq. (8.7.1).

$$\frac{dv}{dt} = -A_1e^{-t} - 4A_2e^{-4t} \tag{8.7.3}$$

At $t = 0$,

$$\frac{dv(0)}{dt} = 16 = -A_1 - 4A_2 \tag{8.7.4}$$

From Eqs. (8.7.2) and (8.7.4), $A_1 = -64/3$ and $A_2 = 4/3$. Substituting A_1 and A_2 in Eq. (8.7.1), we get

$$v(t) = 24 + \frac{4}{3}(-16e^{-t} + e^{-4t})\text{ V} \tag{8.7.5}$$

Since the inductor and capacitor are in series for $t > 0$, the inductor current is the same as the capacitor current. Hence,

$$i(t) = C\frac{dv}{dt}$$

Multiplying Eq. (8.7.3) by $C = 0.25$ and substituting the values of A_1 and A_2 gives

$$i(t) = \frac{4}{3}(4e^{-t} - e^{-4t})\ \text{A} \tag{8.7.6}$$

Note that $i(0) = 4$ A, as expected.

CASE 2 When $R = 4\ \Omega$. Again, the initial current through the inductor is

$$i(0) = \frac{24}{4+1} = 4.5\ \text{A}$$

and the initial capacitor voltage is

$$v(0) = 1i(0) = 4.5\ \text{V}$$

For the characteristic roots,

$$\alpha = \frac{R}{2L} = \frac{4}{2 \times 1} = 2$$

while $\omega_0 = 2$ remains the same. In this case, $s_1 = s_2 = -\alpha = -2$, and we have the critically damped natural response. The total response is therefore

$$v(t) = v_f + (A_1 + A_2 t)e^{-2t}$$

and, as $v_f = 24$ V,

$$v(t) = 24 + (A_1 + A_2 t)e^{-2t} \tag{8.7.7}$$

To find A_1 and A_2, we use the initial conditions. We write

$$v(0) = 4.5 = 24 + A_1 \qquad \Longrightarrow \qquad A_1 = -19.5 \tag{8.7.8}$$

Since $i(0) = C\,dv(0)/dt = 4.5$ or

$$\frac{dv(0)}{dt} = \frac{4.5}{C} = 18$$

From Eq. (8.7.7),

$$\frac{dv}{dt} = (-2A_1 - 2tA_2 + A_2)e^{-2t} \tag{8.7.9}$$

At $t = 0$,

$$\frac{dv(0)}{dt} = 18 = -2A_1 + A_2 \tag{8.7.10}$$

From Eqs. (8.7.8) and (8.7.10), $A_1 = -19.5$ and $A_2 = 57$. Thus, Eq. (8.7.7) becomes

$$v(t) = 24 + (-19.5 + 57t)e^{-2t}\ \text{V} \tag{8.7.11}$$

The inductor current is the same as the capacitor current, that is,

$$i(t) = C\frac{dv}{dt}$$

Multiplying Eq. (8.7.9) by $C = 0.25$ and substituting the values of A_1 and A_2 gives

$$i(t) = (4.5 - 28.5t)e^{-2t}\ \text{A} \tag{8.7.12}$$

Note that $i(0) = 4.5$ A, as expected.

CASE 3 When $R = 1\ \Omega$. The initial inductor current is

$$i(0) = \frac{24}{1+1} = 12\text{ A}$$

and the initial voltage across the capacitor is the same as the voltage across the 1-Ω resistor,

$$v(0) = 1i(0) = 12\text{ V}$$

$$\alpha = \frac{R}{2L} = \frac{1}{2 \times 1} = 0.5$$

Since $\alpha = 0.5 < \omega_0 = 2$, we have the underdamped response

$$s_{1,2} = -\alpha \pm \sqrt{\alpha^2 - \omega_0^2} = -0.5 \pm j1.936$$

The total response is therefore

$$v(t) = 24 + (A_1 \cos 1.936t + A_2 \sin 1.936t)e^{-0.5t} \tag{8.7.13}$$

We now determine A_1 and A_2. We write

$$v(0) = 12 = 24 + A_1 \qquad \Longrightarrow \qquad A_1 = -12 \tag{8.7.14}$$

Since $i(0) = C\, dv(0)/dt = 12$,

$$\frac{dv(0)}{dt} = \frac{12}{C} = 48 \tag{8.7.15}$$

But

$$\begin{aligned}\frac{dv}{dt} &= e^{-0.5t}(-1.936A_1 \sin 1.936t + 1.936A_2 \cos 1.936t) \\ &\quad - 0.5e^{-0.5t}(A_1 \cos 1.936t + A_2 \sin 1.936t)\end{aligned} \tag{8.7.16}$$

At $t = 0$,

$$\frac{dv(0)}{dt} = 48 = (-0 + 1.936A_2) - 0.5(A_1 + 0)$$

Substituting $A_1 = -12$ gives $A_2 = 21.694$, and Eq. (8.7.13) becomes

$$v(t) = 24 + (21.694 \sin 1.936t - 12 \cos 1.936t)e^{-0.5t}\text{ V} \tag{8.7.17}$$

The inductor current is

$$i(t) = C\frac{dv}{dt}$$

Multiplying Eq. (8.7.16) by $C = 0.25$ and substituting the values of A_1 and A_2 gives

$$i(t) = (3.1 \sin 1.936t + 12 \cos 1.936t)e^{-0.5t}\text{ A} \tag{8.7.18}$$

Note that $i(0) = 12$ A, as expected.

Figure 8.20 plots the responses for the three cases. From this figure, we observe that the critically damped response approaches the step input of 24 V the fastest.

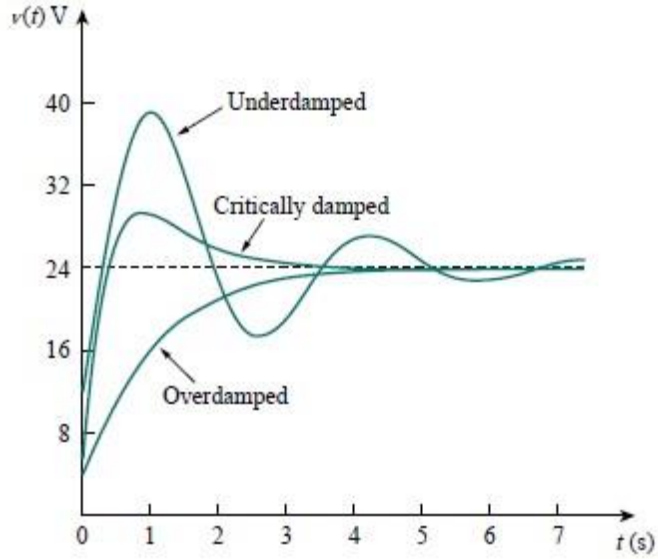

Figure 8.20 For Example 8.7: response for three degrees of damping.

Soln2:

Solution:

This is an example of a second-order circuit with two inductors. We first obtain the mesh currents i_1 and i_2, which happen to be the currents through the inductors. We need to obtain the initial and final values of these currents.

For $t < 0$, $7u(t) = 0$, so that $i_1(0^-) = 0 = i_2(0^-)$. For $t > 0$, $7u(t) = 7$, so that the equivalent circuit is as shown in Fig. 8.30(a). Due to the continuity of inductor current,

$$i_1(0^+) = i_1(0^-) = 0, \qquad i_2(0^+) = i_2(0^-) = 0 \tag{8.10.1}$$

$$v_{L2}(0^+) = v_o(0^+) = 1[(i_1(0^+) - i_2(0^+)] = 0 \tag{8.10.2}$$

Applying KVL to the left loop in Fig. 8.30(a) at $t = 0^+$,

$$7 = 3i_1(0^+) + v_{L1}(0+) + v_o(0^+)$$

or

$$v_{L1}(0^+) = 7 \text{ V}$$

Since $L_1\, di_1/dt = v_{L1}$,

$$\frac{di_1(0^+)}{dt} = \frac{v_{L1}}{L_1} = \frac{7}{\frac{1}{2}} = 14 \text{ V/s} \tag{8.10.3}$$

Similarly, since $L_2\, di_2/dt = v_{L2}$,

$$\frac{di_2(0^+)}{dt} = \frac{v_{L2}}{L_2} = 0 \tag{8.10.4}$$

As $t \to \infty$, the circuit reaches steady state, and the inductors can be replaced by short circuits, as shown in Fig. 8.30(b). From this figure,

$$i_1(\infty) = i_2(\infty) = \frac{7}{3} \text{ A} \tag{8.10.5}$$

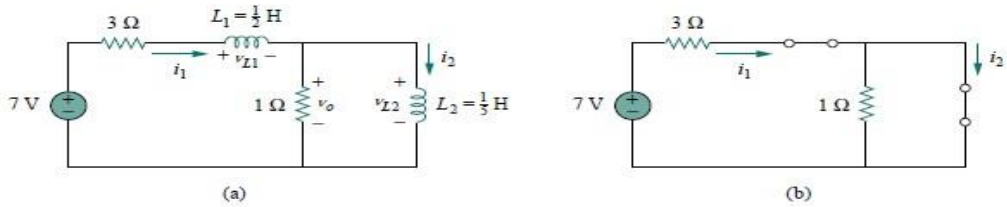

Figure 8.30 Equivalent circuit of that in Fig. 8.29 for: (a) $t > 0$, (b) $t \to \infty$.

Next, we obtain the natural responses by removing the voltage source, as shown in Fig. 8.31. Applying KVL to the two meshes yields

$$4i_1 - i_2 + \frac{1}{2}\frac{di_1}{dt} = 0 \tag{8.10.6}$$

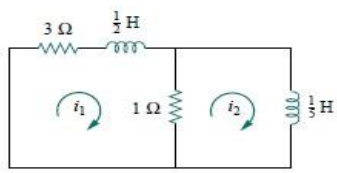

Figure 8.31 Obtaining the natural response for Example 8.10.

and

$$i_2 + \frac{1}{5}\frac{di_2}{dt} - i_1 = 0 \tag{8.10.7}$$

From Eq. (8.10.6),

$$i_2 = 4i_1 + \frac{1}{2}\frac{di_1}{dt} \tag{8.10.8}$$

Substituting Eq. (12.8.8) into Eq. (8.10.7) gives

$$4i_1 + \frac{1}{2}\frac{di_1}{dt} + \frac{4}{5}\frac{di_1}{dt} + \frac{1}{10}\frac{d^2i_1}{dt^2} - i_1 = 0$$

$$\frac{d^2i_1}{dt^2} + 13\frac{di_1}{dt} + 30i_1 = 0$$

From this we obtain the characteristic equation as

$$s^2 + 13s + 30 = 0$$

which has roots $s = -3$ and $s = -10$. Hence, the natural response is

$$i_{1n} = Ae^{-3t} + Be^{-10t} \tag{8.10.9}$$

where A and B are constants. The forced response is

$$i_{1f} = i_1(\infty) = \frac{7}{3}\text{ A} \tag{8.10.10}$$

From Eqs. (8.10.9) and (8.10.10), we obtain the complete response as

$$i_1(t) = \frac{7}{3} + Ae^{-3t} + Be^{-10t} \tag{8.10.11}$$

We finally obtain A and B from the initial values. From Eqs. (8.10.1) and (8.10.11),

$$0 = \frac{7}{3} + A + B \tag{8.10.12}$$

Taking the derivative of Eq. (8.10.11), setting $t = 0$ in the derivative, and enforcing Eq. (8.10.3), we obtain

$$14 = -3A - 10B \tag{8.10.13}$$

From Eqs. (8.10.12) and (8.10.13), $A = -4/3$ and $B = -1$. Thus,

$$i_1(t) = \frac{7}{3} - \frac{4}{3}e^{-3t} - e^{-10t} \tag{8.10.14}$$

We now obtain i_2 from i_1. Applying KVL to the left loop in Fig. 8.30(a) gives

$$7 = 4i_1 - i_2 + \frac{1}{2}\frac{di_1}{dt} \qquad \Longrightarrow \qquad i_2 = -7 + 4i_1 + \frac{1}{2}\frac{di_1}{dt}$$

Substituting for i_1 in Eq. (8.10.14) gives

$$\begin{aligned} i_2(t) &= -7 + \frac{28}{3} - \frac{16}{3}e^{-3t} - 4e^{-10t} + 2e^{-3t} + 5e^{-10t} \\ &= \frac{7}{3} - \frac{10}{3}e^{-3t} + e^{-10t} \end{aligned} \tag{8.10.15}$$

From Fig. 8.29,

$$v_o(t) = 1[i_1(t) - i_2(t)] \tag{8.10.16}$$

Substituting Eqs. (8.10.14) and (8.10.15) into Eq. (8.10.16) yields

$$v_o(t) = 2(e^{-3t} - e^{-10t}) \tag{8.10.17}$$

Note that $v_o(0) = 0$, as expected from Eq. (8.10.2).

Soln3:

$$i(0^+) = 1\text{ A},$$

$$v(0^+) = \frac{Ldi(0^+)}{dt}$$

$$\alpha = \frac{1}{2 \times 2 \times 0.5} = 0.5,$$

$$\omega_0 = \frac{1}{\sqrt{1 - 0.5}} = \sqrt{2}$$

$$s = -0.5 \pm \sqrt{0.5^2 - 2} = 0.5 \pm j1.323$$

$$i(t) = 4 + (A\cos 1.32t + B\sin 1.32t)\, e^{-0.5}t$$

$$1 = 4 + A, \Rightarrow A = -3$$

$$\frac{di(0)}{dt} = 0 = 0.5A + 1.32B,\ B = -1.13$$

Soln 4:

Solution:

Let

$\mathbf{Z}_1$ = Impedance of the 2-mF capacitor

$\mathbf{Z}_2$ = Impedance of the 3-Ω resistor in series with the 10-mF capacitor

$\mathbf{Z}_3$ = Impedance of the 0.2-H inductor in series with the 8-Ω resistor

Then

$$\mathbf{Z}_1 = \frac{1}{j\omega C} = \frac{1}{j50 \times 2 \times 10^{-3}} = -j10\ \Omega$$

$$\mathbf{Z}_2 = 3 + \frac{1}{j\omega C} = 3 + \frac{1}{j50 \times 10 \times 10^{-3}} = (3 - j2)\ \Omega$$

$$\mathbf{Z}_3 = 8 + j\omega L = 8 + j50 \times 0.2 = (8 + j10)\ \Omega$$

The input impedance is

$$\mathbf{Z}_{\text{in}} = \mathbf{Z}_1 + \mathbf{Z}_2 \parallel \mathbf{Z}_3 = -j10 + \frac{(3 - j2)(8 + j10)}{11 + j8}$$

$$= -j10 + \frac{(44 + j14)(11 - j8)}{11^2 + 8^2} = -j10 + 3.22 - j1.07\ \Omega$$

Thus,

$$\mathbf{Z}_{\text{in}} = 3.22 - j11.07\ \Omega$$

Tutorial 9

Q1: For the RL circuit. If 1 V is applied at the input, find the magnitude and phase shift produced at 5 KHz. Specify whether the phase shift is leading or lagging.

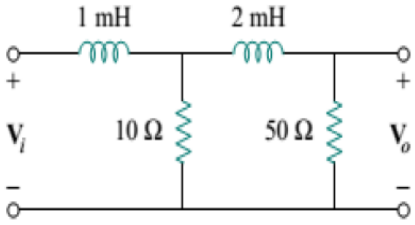

Q2. Determine the value of V_o in the given figure.

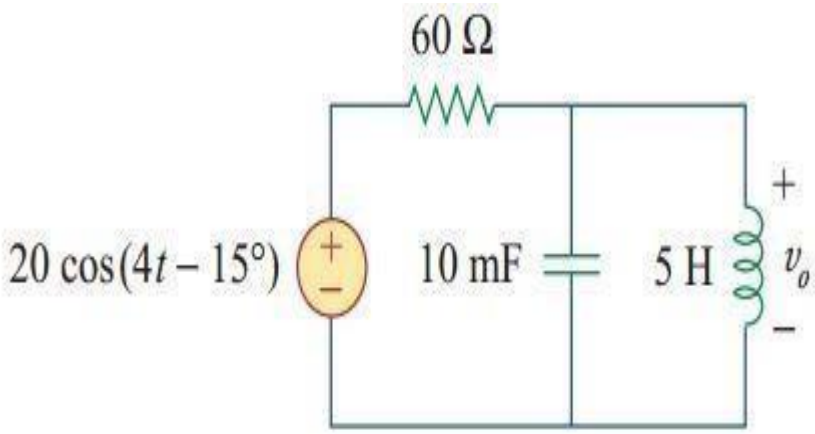

Q3

Apply phasor analysis to evaluate the following.

(a) $v = 50\cos(\omega t + 30°) + 30\cos(\omega t - 90°)$ V

(b) $i = 15\cos(\omega t + 45°) - 10\sin(\omega t + 45°)$ A

Q4

Given that $v_s(t) = 20 \sin(100t - 40°)$ in Fig. **below** determine $i_x(t)$.

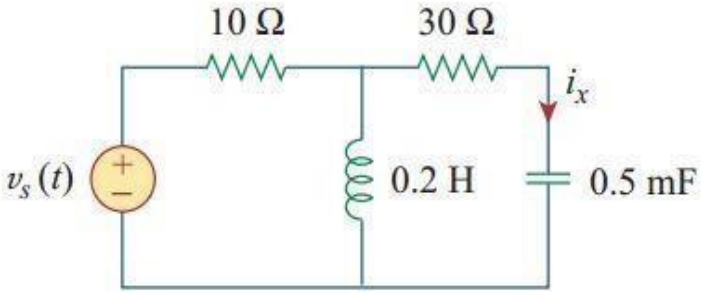

Q5.

What value of ω will cause the forced response v_o in Fig. **below** to be zero?

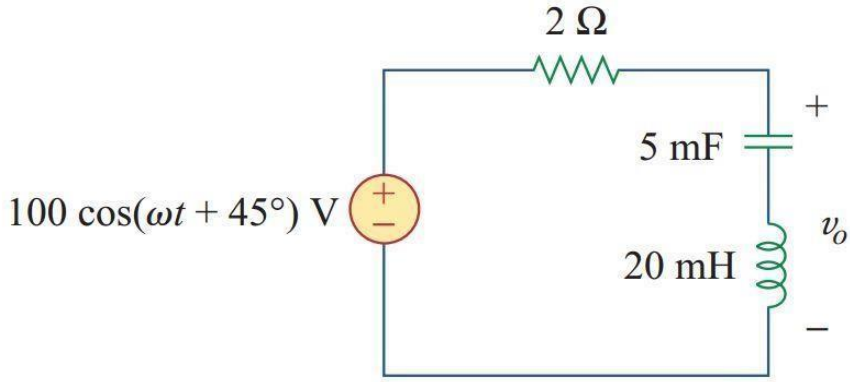

Solutions Tutorial 9

Sol 1: 0.172 V, 120.4°, and lagging

Sol 2.

To do the analysis in the frequency domain, we must first transform the time domain circuit in Fig. 9.25 to the phasor domain equivalent in Fig. 9.26. The transformation produces

$$v_s = 20\cos(4t - 15^\circ) \quad \Rightarrow \quad \mathbf{V}_s = 20\angle{-15^\circ}\ \text{V}, \qquad \omega = 4$$

$$10\ \text{mF} \quad \Rightarrow \quad \frac{1}{j\omega C} = \frac{1}{j4 \times 10 \times 10^{-3}} = -j25\ \Omega$$

$$5\ \text{H} \quad \Rightarrow \quad j\omega L = j4 \times 5 = j20\ \Omega$$

Let

$\mathbf{Z}_1$ = Impedance of the 60-Ω resistor

$\mathbf{Z}_2$ = Impedance of the parallel combination of the 10-mF capacitor and the 5-H inductor

Then $\mathbf{Z}_1 = 60\ \Omega$ and

$$\mathbf{Z}_2 = -j25 \parallel j20 = \frac{-j25 \times j20}{-j25 + j20} = j100\ \Omega$$

By the voltage-division principle,

$$\mathbf{V}_o = \frac{\mathbf{Z}_2}{\mathbf{Z}_1 + \mathbf{Z}_2}\mathbf{V}_s = \frac{j100}{60 + j100}(20\angle{-15^\circ})$$
$$= (0.8575\angle{30.96^\circ})(20\angle{-15^\circ}) = 17.15\angle{15.96^\circ}\ \text{V}$$

We convert this to the time domain and obtain

$$v_o(t) = 17.15\cos(4t + 15.96^\circ)\ \text{V}$$

Sol. 3.

Apply phasor analysis to evaluate the following.

(a) $v = 50\cos(\omega t + 30^o) + 30\cos(\omega t + 90^o)$V

(b) $i = 15\cos(\omega t + 45^o) - 10\sin(\omega t + 45^o)$A

Chapter 9, Solution 23.

(a) $V = 50 < 30^o + 30 < 90^o = 43.3 + j25 - j30 = 43.588 < -6.587^o$

$v = \underline{43.588\cos(\omega t - 6.587^o)\ \text{V}}$ = **43.49cos(ωt–6.59°) V**

(b) $I = 15 < 45^o - 10 < 45^o - 90^o = (10.607 + j10.607) - (7.071 - j7.071) = 18.028 < 78.69^o$

$i = \underline{18.028\cos(\omega t + 78.69^o)\ \text{A}}$ = **18.028cos(ωt+78.69°) A**

Sol. 4.

Converting the circuit to the frequency domain, we get:

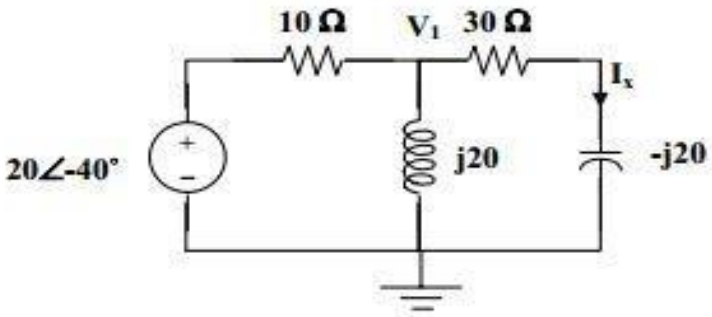

We can solve this using nodal analysis.

$$\frac{V_1 - 20\angle -40^\circ}{10} + \frac{V_1 - 0}{j20} + \frac{V_1 - 0}{30 - j20} = 0$$

$$V_1(0.1 - j0.05 + 0.02307 + j0.01538) = 2\angle -40^\circ$$

$$V_1 = \frac{2\angle 40^\circ}{0.12307 - j0.03462} = 15.643\angle -24.29^\circ$$

$$I_x = \frac{15.643\angle -24.29^\circ}{30 - j20} = 0.4338\angle 9.4^\circ$$

$$i_x = \underline{0.4338\sin(100t + 9.4^\circ)\,A}$$

Sol.5.

$$v_o = 0 \text{ if } \omega L = \frac{1}{\omega C} \longrightarrow \omega = \frac{1}{\sqrt{LC}}$$

$$\omega = \frac{1}{\sqrt{(5\times10^{-3})(20\times10^{-3})}} = \underline{\mathbf{100\ rad/s}}$$

Tutorial 10

Q1: Find v_o and i_o in the circuit shown below.

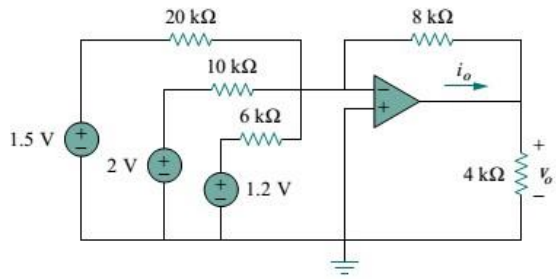

Q2: Design problem: Design an op amp with inputs v_1 and v_2 such that $v_o = -5\ v_1 + 3\ v_2$. a) Single stage

b) Cascaded

Q3: For circuit shown below: show $v_o/v_i = -1/R*(R_1+R_2+ (R_1* R_2)/R_3)$

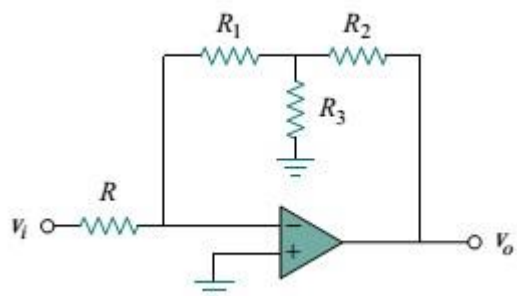

Q4

Calculate all voltage drops and currents in this circuit, complete with arrows for current direction and polarity markings for voltage polarity. Then, calculate the overall voltage gain of this amplifier circuit (A_V), both as a ratio and as a figure in units of decibels (dB):

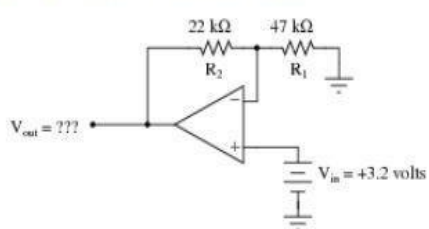

Tutorial 10 Solutions

Solution 1 : -3.8V, 1.425mA

Solution 2:

The circuit requires that

$$v_o = 3v_2 - 5v_1 \tag{5.7.1}$$

This circuit can be realized in two ways.

DESIGN 1 If we desire to use only one op amp, we can use the op amp circuit of Fig. 5.24. Comparing Eq. (5.7.1) with Eq. (5.18),

$$\frac{R_2}{R_1} = 5 \qquad \Longrightarrow \qquad R_2 = 5R_1 \tag{5.7.2}$$

Also,

$$5\frac{(1 + R_1/R_2)}{(1 + R_3/R_4)} = 3 \qquad \Longrightarrow \qquad \frac{\frac{6}{5}}{1 + R_3/R_4} = \frac{3}{5}$$

or

$$2 = 1 + \frac{R_3}{R_4} \qquad \Longrightarrow \qquad R_3 = R_4 \tag{5.7.3}$$

If we choose $R_1 = 10\ \text{k}\Omega$ and $R_3 = 20\ \text{k}\Omega$, then $R_2 = 50\ \text{k}\Omega$ and $R_4 = 20\ \text{k}\Omega$.

DESIGN 2 If we desire to use more than one op amp, we may cascade an inverting amplifier and a two-input inverting summer, as shown in Fig. 5.25. For the summer,

$$v_o = -v_a - 5v_1 \tag{5.7.4}$$

and for the inverter,

$$v_a = -3v_2 \tag{5.7.5}$$

Combining Eqs. (5.7.4) and (5.7.5) gives

$$v_o = 3v_2 - 5v_1$$

which is the desired result. In Fig. 5.25, we may select $R_1 = 10\ \text{k}\Omega$ and $R_2 = 20\ \text{k}\Omega$ or $R_1 = R_2 = 10\ \text{k}\Omega$.

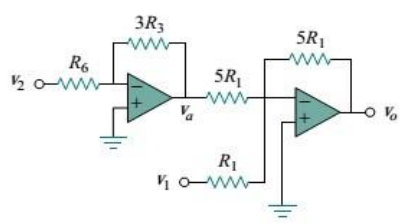

Figure 5.25 For Example 5.7.

Solution 3:

(a) Let v_1 be the voltage at the node where the three resistors meet. Applying KCL at this node gives

$$i_s = \frac{v_1}{R_2} + \frac{v_1 - v_o}{R_3} = v_1\left(\frac{1}{R_2} + \frac{1}{R_3}\right) - \frac{v_o}{R_3} \qquad (1)$$

At the inverting terminal,

$$i_s = \frac{0 - v_1}{R_1} \quad \longrightarrow \quad v_1 = -i_s R_1 \qquad (2)$$

Combining (1) and (2) leads to

$$i_s\left(1 + \frac{R_1}{R_2} + \frac{R_1}{R_3}\right) = -\frac{v_o}{R_3} \quad \longrightarrow \quad \underline{\frac{v_o}{i_s} = -\left(R_1 + R_3 + \frac{R_1 R_3}{R_2}\right)}$$

Solution 4:

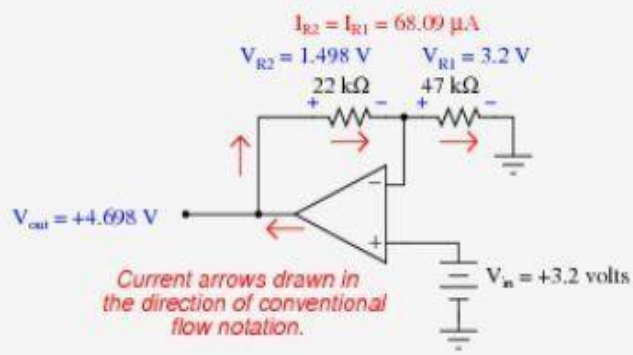

$A_V = 1.468 = 3.335$ dB

MATLAB TUTORIAL

BASIC ELECTRONICS

SEC-B

INDRAPRASTHA INSTITUTE *of*
INFORMATION TECHNOLOGY
DELHI

MATLAB Desktop

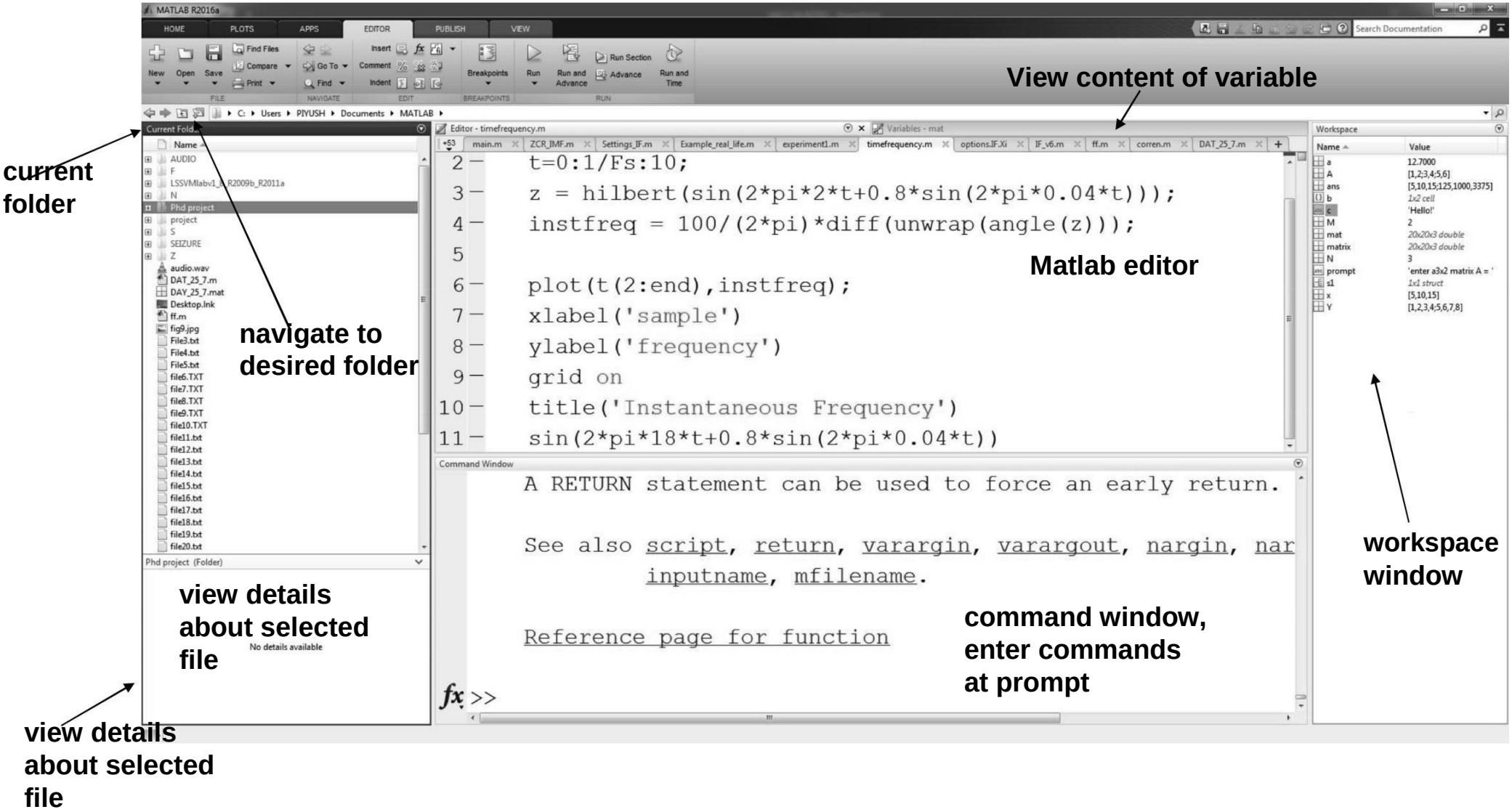

Variables, Constants, Keywords

Variables require no special declarations of type or storage. Examples:

```
>> x = 3;                    % simple scalar
>> y = [4, 5, 6];            % row vector of length 3
>> z = [4; 5; 6];            % column vector of length 3
                             % 2x3 matrix
                             % string
                             % 1x3 cell array
```

$$y = [4,5,6], \quad z = \begin{bmatrix} 4 \\ 5 \\ 6 \end{bmatrix}, \quad A = \begin{bmatrix} 1 & 2 & 3 \\ 4 & 5 & 6 \end{bmatrix}, \quad \text{'123-456'};$$

math notation

the functions `class` and `size` tell you the type and dimensions of the defined object, e.g.,

```
>> class(C)
>> size(C)
```

```
>> x = 3
x =
     3

>> y = [4, 5, 6]
y =
     4     5     6

>> z = [4; 5; 6]       % note, z = y'
z =
     4
     5
     6

>> A = [1 2 3; 4 5 6]
A =
     1     2     3
     4     5     6
```

What are your variables? How to clear them?
Use workspace window, or the commands:

who, whos, clear, clc, close

```
>> who
Your variables are:
A  y  z

>> whos
  Name      Size     Bytes  Class     Attributes
  A         2x3         48  double
  y         1x3         24  double
  z         3x1         24  double

>> clear all      % clear all variables from memory
>> clc            % clear command window
>> close all      % close all open figures
```

Special built-in math constants that should not (though they can) be re-defined as variables:

```
eps         % machine epsilon - floating-point accuracy
i,j         % imaginary unit, i.e., sqrt(-1)
Inf,inf     % infinity
intmax      % largest value of specified integer type
intmin      % smallest value of specified integer type
NaN,nan     % not-a-number, e.g., 0/0, inf/inf
pi          % pi
realmax     % largest positive floating-point number
realmin     % smallest positive floating-point number
```

Note: `i`, `j` are commonly used for array and matrix indices. If you're **dealing with complex-valued data, avoid redefining both `i`,`j`.**

Values of special constants:

```
>> eps            % equal to 2^(-52)
ans =
  2.2204e-016       % MATLAB's floating-point accuracy
                    % i.e., 2.2204 * 10^(-16)
>> intmax           % 2^(31)-1 for 32-bit integers
ans =
  2147483647

>> intmin         % equal to -2^(31)
ans =
 -2147483648

>> realmax        % equal to (2-eps)*2^(1023)
ans =
  1.7977e+308       % i.e., 1.7977 * 10^(308)

>> realmin        % 2^(-1022) = 2.2251 * 10^(-308)
ans =
  2.2251e-308
```

Special keywords that cannot be used as variable names:

```
 >> iskeyword
ans =
    'break'
    'case'
    'catch'
    'classdef'
    'continue'
    'else'
    'elseif'
    'end'
    'for'
    'function'
    'global'
    'if'
    'otherwise'
    'parfor'
    'persistent'
    'return'
    'switch'
    'try'
    'while'
```

To test if the word while is a MATLAB keyword,

```
iskeyword('while')
```

ans = 1

1→'true', 0→'false'

Complex Numbers

By default, MATLAB treats all numbers and expressions as complex (even if they are real).

No special declarations are needed to handle complex-number operations. Examples:

```
>> z = 3+4i;              % or, 3+4j, 3+4*i, 3+4*j
>> x = real(z);           % real part of z
>> y = imag(z);           % inaginary part of z
>> R = abs(z);            % absolute value of z
>> theta = angle(z);      % phase angle of z in radians
>> w = conj(z);           % complex conjugate, w=3-4i
>> isreal(z);             % test if z is real or complex
```

$$z = x + j\,y = R\,e^{j\theta}\,, \quad R = |z| = \sqrt{x^2 + y^2}\,, \quad \theta = \arctan\frac{y}{x}$$

cartesian & polar forms

math notation: θ = Arg(z)

```
>> z = 3+4j
z =
   3.0000 + 4
             .0000i
>> x = real(z
x =          )
     3
>> y = imag(z)
y =
     4
>> R = abs(z)
R =
     5
>> theta = angle(z)          % in radians
theta =
    0.9273

>> abs(z - R*exp(j*theta)) + abs(z-x-j*y)    % test
ans =
  6.2804e-016
```

equivalent definitions

```
z = 3+4*j
z = 3+4i
z = 3+4*i
z = complex(3,4)
```

input/output functions: disp,input

```
>> x = 10; disp('the value of x is:'); disp(x);
the value of x is:
    10

>> x = input('enter x: ')        % numerical input
enter x: 100                     % 100 entered by user
x =
   100

>> y = input('enter string: ', 's');  % string input
enter string: abcd efg
>> y = input('enter string: ')
enter string: 'abcd efg'
y =
abcd efg
```

prompt string in single quotes

string entered with no quotes

string entered in quotes

```
>> help fprintf
>> help sprintf
```

```
>> help disp
>> help input
>> help menu
```

Arrays and Matrices

arrays and matrices are the most important data objects in MATLAB

We discuss briefly:

a) row and column vectors
b) transposition operator, '
c) colon operator, **:**
d) equally-spaced elements, linspace
e) accessing array elements
f) dynamic allocation & de-allocation
g) pre-allocation

The key to efficient MATLAB programming can be summarized in three words:

vectorize, vectorize, vectorize

and avoid all loops

Compare the two alternative computations:

```
x = [2,-3,4,1,5,8];
y = zeros(size(x));
for n = 1:length(x)
   y(n) = x(n)^2;
end
```

```
x = [2,-3,4,1,5,8];
y = x.^2;
```

element-wise exponentiation .^

ordinary exponentiation ^

```
answer: y = [4,9,16,1,25,64]
```

```
>> x = [0 1 2 3 4 5]            % row vector
x =
     0     1     2     3     4     5

>> x = 0:5                      % row vector
x =
     0     1     2     3     4     5

>> x = [0 1 2 3 4 5]'           % column vector, (0:5)'
x =
     0
     1
     2
     3
     5
```

the prime operator, **'**, or transpose, turns row vectors into column vectors, and vice versa

caveat: **'** is actually conjugate transpose, use dot-prime, **.'** , for transpose w/o conjuga

```
>> z = [i; 1+2i; 1-i]     % column vector
z =
        0 + 1.0000i
   1.0000 + 2.0000i
   1.0000 - 1.0000i

>> z.'            % transpose without conjugation
ans =
        0 + 1.0000i   1.0000 + 2.0000i   1.0000 - 1.0000i

>> z'             % transpose with conjugation
ans =
        0 - 1.0000i   1.0000 - 2.0000i   1.0000 + 1.0000i

>> (z.')'         % same as (z').' , or, conj(z)
ans =
        0 - 1.0000i
   1.0000 - 2.0000i
   1.0000 + 1.0000i
```

```
>> x = 0 : 0.3 : 1
x =
    0   0.3   0.6   0.9

>> x = 0 : 0.4 : 1
x =
    0   0.4   0.8

>> x = 0 : 0.7 : 1
x =
    0   0.7

% before rounding, (b-a)/s was in the three cases:
% 1/0.3 = 3.3333,  1/0.4 = 2.5,  1/0.7 = 1.4286
```

step increment

```
x = a : s : b;
```

the number of subintervals within [a,b] is obtained by rounding `(b_a)/s`, down to the nearest integer,

```
N = floor((b-a)/s);
```

`length(x)` is equal to `N+1`

```
x(n) = a + s*(n-1),
n = 1,2,...,N+1
```

Note: MATLAB array indices always start with 1 and may not be 0 or negative

exception: logical indexing, discussed later

```
>> x = [ 2,    5,   -6,   10,    3,    4 ];
        x(1), x(2), x(3), x(4), x(5), x(6)
```

Other languages, such as C/C++ and Fortran, allow indices to start at 0. For example, the same array would be declared/defined in C as follows:

```
double x[6] = { 2,    5,   -6,   10,    3,    4 };
                x[0], x[1], x[2], x[3], x[4], x[5]
```

rule of thumb: M = C + 1

accessing array entries:

```
>> x = [2, 5, -6, 10, 3, 4]
x =
     2     5    -6    10     3     4

>> length(x)     % length of x, see also size(x)
ans =
     6

>> x(1)          % first entry
ans =
     2

>> x(3)          % third entry
ans =
    -6

>> x(end)        % last entry - need not know length
ans =
     4
```

accessing array entries:

```
>> x(end-3:end)          % x = [2, 5, -6, 10, 3, 4]
ans =
     -6   10     3     4       % last four

>> x(3:5)                % list third-to-fifth entries
ans =
    -6    10     3

>> x(1:3:end)            % every third entry
ans =
     2    10

>> x(1:2:end)            % every second entry
ans =
     2    -6     3
```

accessing array entries:

```
>> x = [2, 5, -6, 10, 3, 4];

>> x(end:-1:1)     % list backwards, same as fliplr(x)
ans =
     4    3    10    -6     5     2

>> x([3,1,5])        % list [x(3),x(1),x(5)]
ans =
     -6     2     3

>> x(end+3) = 8
x =
    2     5    -6    10     3     4     0     0     8
```

automatic memory re-allocation

automatic memory allocation and de-allocation:

```
>> clear x

>> x(3) = -6
x =
     0     0    -6

>> x(6) = 4
x =
     0     0    -6     0     0     4

>> x(end) = []                    % delete last entry
x =
     0     0    -6     0     0

>> x = [2, 5, -6, 10, 3, 4];
>> x(3)=[]                        % delete third entry
x =
     2     5     10     3     4
```

pre-allocation

```
>> clear x
>> x = zeros(1,6)          % 1x6 array of zeros
x =
     0     0     0     0     0     0

>> x = zeros(6,1)          % 6x1 array of zeros
x =
     0
     0
     0
     0
     0
     0
```

Pre-allocation is useful for very large arrays, e.g., `10^4`, for example, in dealing with audio or image files, or finite-element methods.

```
>> help zeros
>> help ones
```

$$A = \begin{bmatrix} A_{11} & A_{12} & A_{13} \\ A_{21} & A_{22} & A_{23} \\ A_{31} & A_{32} & A_{33} \end{bmatrix}$$

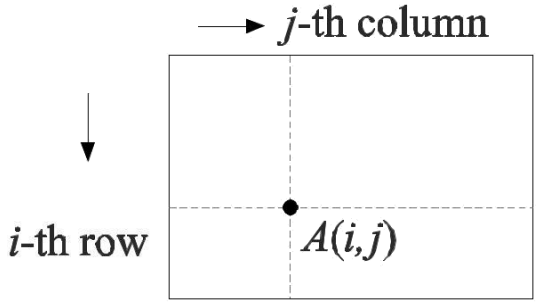

matrix indexing convention

```
>> A = [1 2 3; 2 0 4; 0 8 5]
A =
     1     2     3
     2     0     4
     0     8     5

>> size(A)          % [N,M] = size(A), NxM matrix
ans =
     3     3
```

accessing matrix elements:

```
>> A(1,1)        % 11 matrix element
ans =
     1
```

$$A = \begin{bmatrix} 1 & 2 & 3 \\ 2 & 0 & 4 \\ 0 & 8 & 5 \end{bmatrix}$$

```
>> A(2,3)        % 23 matrix element
ans =
     4
```

$$A = \begin{bmatrix} 1 & 2 & 3 \\ 2 & 0 & 4 \\ 0 & 8 & 5 \end{bmatrix}$$

```
>> A(:,2)        % second column
ans =
     2
     0
     8
```

$$A = \begin{bmatrix} 1 & 2 & 3 \\ 2 & 0 & 4 \\ 0 & 8 & 5 \end{bmatrix}$$

```
>> A(3,:)         % third row
ans =
     0     8     5
```

$$A = \begin{bmatrix} 1 & 2 & 3 \\ 2 & 0 & 4 \\ 0 & 8 & 5 \end{bmatrix}$$

transposing a matrix:
rows become columns and vice versa

```
>> A = [1 2 3 4; 2 0 5 6; 0 8 7 9]    % size 3x4
A =
     1     2     3     4
     2     0     5     6
     0     8     7     9

>> A'                                 % size 4x3
ans =3     5     7
     1     2     0
     4     6     9
     2     0     8
```

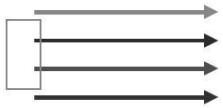

transposition operation

=>

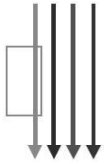

concatenating columns

```
>> A = [1 2 3; 2 0 4; 0 8 5]
A =
     1     2     3
     2     0     4
     0     8     5
```

$$A = \begin{bmatrix} 1 & 2 & 3 \\ 2 & 0 & 4 \\ 0 & 8 & 5 \end{bmatrix}$$

```
>> A(:)        % concatenate columns
ans =
     1
     2
     0
     2
     0
     8
     3
     4
     5
```

$$A = \begin{bmatrix} 1 & 2 & 3 \\ 2 & 0 & 4 \\ 0 & 8 & 5 \end{bmatrix}$$

A(6)

A(9)

column-wise indexing

concatenating rows

```
B = A'; B(:)
```

see also the built-in functions:

sub2ind, ind2sub

building a matrix column-wise

```
>> A = zeros(3,3);

>> A(:) = [1 2 0  2 0 8  3 4 5]

A =
     1     2     3
     2     0     4
     0     8     5
```

define desired size

enter elements in a row (or column)

elements are re-arranged column-wise

sub-matrices

```
A = [ 2     4     1     3     5
      8     6     7     4     9
      3     2     5     2     1
      5     6     1     8     4 ];
```

```
A(3:4, 2:4)
ans =
      2     5     2
      6     1     8
```

$$A = \begin{bmatrix} 2 & 4 & 1 & 3 & 5 \\ 8 & 6 & 7 & 4 & 9 \\ 3 & 2 & 5 & 2 & 1 \\ 5 & 6 & 1 & 8 & 4 \end{bmatrix}$$

```
A(1:3, [1,5])
ans =
      2     5
      8     9
      3     1
```

$$A = \begin{bmatrix} 2 & 4 & 1 & 3 & 5 \\ 8 & 6 & 7 & 4 & 9 \\ 3 & 2 & 5 & 2 & 1 \\ 5 & 6 & 1 & 8 & 4 \end{bmatrix}$$

transposing a matrix

```
>> A = [1 2 3 4; 2 0 5 6; 0 8 7 9]    % size 3x4
A =
     1     2     3     4
     2     0     5     6
     0     8     7     9

>> A'                                 % size 4x3
ans =
     1     2     0
     2     0     8
     3     5     7
     4     6     9
```

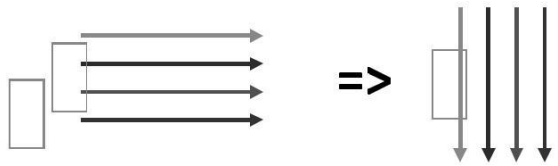

transposition operation

adding / deleting rows or columns

```
>> A = [1 2 3; 2 0 4; 0 8 5]

>> A(5,:) = [7 8 9]     % add a fifth row
A =
     1     2     3
     2     0     4
     0     8     5
     0     0     0
     7     8     9
```

4th row is automatically allocated

```
>> A(:,2) = []          % delete second column
A =
     1     3
           4
     0     5
     0     0
     7     9
```

[ ] denotes an empty 0x0 matrix

alternatively, redefine A by omitting its second column:

```
>> A = A(:,[1,3]);
```

replacing rows or columns

```
>> A = [1 2 3; 2 0 4; 0 8 5]
A =
     1     2     3
     2     0     4
     0     8     5

>> A(:,2) = [20 30 40]'    % replace second column
A =
     1    20     3
     2    30     4
     0    40     5

>> A(3,:) = [50 60 70]     % replace third row
A =
     1    20     3
     2    30     4
    50    60    70
```

inserting rows or columns

```
>> A = [1 2 3; 2 0 4; 0 8 5]
A =
     1     2     3
     2     0     4
     0     8     5

% insert new column between columns 2 & 3
A = [A(:,1:2), [10 20 30]', A(:,3)]
A =
     1     2    10     3
     2     0    20     4
     0     8    30     5

% insert new row between rows 1 & 2
A = [A(1,:); [60 70 80 90]; A(2:3,:)]
A =
     1     2    10     3
    60    70    80    90
     2     0    20     4
     0     8    30     5
```

concatenating matrices

$$A = \begin{bmatrix} 1 & 2 \\ 3 & 4 \end{bmatrix}$$

$$B = \begin{bmatrix} 5 & 6 \\ 7 & 8 \end{bmatrix}$$

```
>> A = [1 2; 3 4];
>> B = [5 6; 7 8];

>> C = [A, B]
C =
     1     2     5     6
     3     4     7     8
```

A,B must have same number of rows

```
>> C = [A; B]
C =
     1     2
     3     4
     5     6
     7     8
```

A,B must have same number of columns

appending columns or rows

```
>> A = [1 2; 3 4; 5 6];
>> b = [7; 7; 7];
>> c = [8 8 8]';

>> B = [A,b,c]
B =
     1    2    7    8
     3    4    7    8
     5    6    7    8

>> C = [b,A,c]
C =
     7    1    2    8
     7    3    4    8
     7    5    6    8
```

$$A = \begin{bmatrix} 1 & 2 \\ 3 & 4 \\ 5 & 6 \end{bmatrix}, \quad \mathbf{b} = \begin{bmatrix} 7 \\ 7 \\ 7 \end{bmatrix}, \quad \mathbf{c} = \begin{bmatrix} 8 \\ 8 \\ 8 \end{bmatrix}$$

```
>> D = [A; [7 7];]
>> E = [[8 8]; A]
D =
     1     2
     3     4
     5     6
     7     7
E =
     8     8
     1     2
     3     4
     5     6
```

```
>> help eye
>> help zeros
>> help ones
```

```
zeros(3)   % 3x3 matrix of zeros
ans =
     0     0     0
     0     0     0
     0     0     0

ones(3)    % 3x3 matrix of ones
ans =
     1     1     1
     1     1     1
     1     1     1
```

general usage:

```
eye(N,M)
zeros(N,M)
ones(N,M)
```

see also:

```
rand(N,M)
randn(N,M)
randi(I,N,M)
```

```
>> help elmat

  Elementary matrices and matrix manipulation.

  Elementary matrices.
    zeros        - Zeros array.
    ones         - Ones array.
    eye          - Identity matrix.
    repmat       - Replicate and tile array.
    linspace     - Linearly spaced vector.
    logspace     - Logarithmically spaced vector.

    etc.

>> help gallery     % various test matrices
```

diagonals

```
>> A = [1 2 3; 4 5 6; 7 8 9]
A =
     1     2     3
     4     5     6
     7     8     9

>> d = diag(A)          % main diagonal
d =
     1
     5
     9

>> d = diag(A,-1)       % first sub-diagonal
d =
     4
     8
```

```
>> help diag
```

`diag(diag(A))` = what does it do?

how to make a diagonal matrix

```
>> d = [4 5 6];          % or, column d = [4 5 6]';

A = diag(d)              % d is main diagonal
A =
     4     0     0
     0     5     0
     0     0     6

>> d = [4 5];

A = diag(d,1)            % d is first upper-diagonal
A =
     0     4     0
     0     0     5
     0     0     0
```

```
>> A = [1 2; 3 4]; B = [5 6; 7 8];
>> C = [9 8 7; 6 5 4; 3 2 1];

>> blkdiag(A,B)
ans =
     1     2     0     0
     3     4     0     0
     0     0     5     6
     0     0     7     8

>> blkdiag(A,B,C)
ans =
     1     2     0     0     0     0     0
     3     4     0     0     0     0     0
     0     0     5     6     0     0     0
     0     0     7     8     0     0     0
     0     0     0     0     9     8     7
     0     0     0     0     6     5     4
     0     0     0     0     3     2     1
```

how to make block-diagonal matrices

matrix dimensions expand as necessary

reshaping a matrix or a vector

```
A = [1    5    9
     2    6    5
     3    7    0
     4    8    4];

>> reshape(A,3,4)
ans =
     1    4    7    5
     2    5    8    0
     3    6    9    4


>> reshape(A,2,6)
ans =
     1    3    5    7    9    0
     2    4    6    8    5    4
```

```
>> reshape(A,6,2)
ans =
     1     7
     2     8
     3     9
     4     5
     5     0
     6     4
```

element-wise
matrix operations

```
>> A = [1 2; 3 4]
A =
     1     2
     3     4
```

element-wise operation
matrix-wise operation

```
>> [A, A.^2; 2.^A, A^2]        % form sub-blocks
```

```
>> A=[1 4; 8 2], B=[1 2; 2 1]
A =
     1     4
     8     2
B =
     1     2
     2     1

>> A.*B
ans =
     1     8
    16     2

>> A.^B
ans =
     1    16
    64     2
```

```
>> B.^A
ans =
     1    16
   256     1
```

functions of matrices

```
>> X = [pi/2, pi/3; pi/4, pi/8]
X =
    1.5708    1.0472
    0.7854    0.3927

>> sin(X)
ans =
    1.0000    0.8660
    0.7071    0.3827

>> sin(sym(X))
ans =
[          1,                3^(1/2)/2]
[ 2^(1/2)/2, (2 - 2^(1/2))^(1/2)/2]
```

many functions operate element-wise on matrices
e.g., trig, exp, log functions

others operate column-wise
e.g., min, max, sort, diff, mean, std, median, sum, cumsum, prod, cumprod

functions of matrices

functions that operate column-wise can also operate row-wise by using a second argument

```
A = [8     5     8
     9     1     3
     2     4     5
     6     2     2];

>> sum(A)
ans =
    25    12    18

>> cumsum(A)
ans =
     8     5     8
    17     6    11
    19    10    16
    25    12    18
```

```
>> sum(A,2)
ans =
    21
    13
    11
    10

>> cumsum(A,2)
ans =
     8    13    21
     9    10    13
     2     6    11
     6     8    10
```

functions of matrices

```
A = [8     5     8
     9     1     3
     2     4     5
     6     2     2];

>> mean(A), mean(A,2)
ans =
    6.25   3.00   4.50
ans =
    7.0000
    4.3333
    3.6667
```

means computed down each column

means computed across rows

```
>> [m,i]=min(A)
m =
     2    1    2
i =
     3    2    4

>> [m,i]=min(A,[],2);
>> [m,i]
ans =
     5   2
     1   2
     2   1
     2   2
```

`,max` require a sightly different syntax for row-wise operation, similarly for `diffstd`

Basic Electronics

Tutorial: Laplace Transform in Circuit Analysis

Date: 14-03-2018

INDRAPRASTHA INSTITUTE of
INFORMATION TECHNOLOGY
DELHI

Laplace Transform in Circuit Analysis

Time-Domain Circuit

- Set of Differential equations
- Multi-stage process
- Can not verify your solution in between the process

$\mathcal{L}\{f(t)\}$ →

s-Domain Circuit

- Set of algebraic equations
- Single-Stage process
- Solution can be verified in between the process

Definition of the Laplace Transform:

$$\boxed{\mathcal{L}\{f(t)\} = \boldsymbol{F}(\boldsymbol{s}) = \int_{-\infty}^{\infty} f(t)e^{-\boldsymbol{s}t}dt}$$

Laplace Transform Pairs

$f(t) = \mathcal{L}^{-1}\{\mathbf{F(s)}\}$	$\mathbf{F(s)} = \mathcal{L}\{f(t)\}$	$f(t) = \mathcal{L}^{-1}\{\mathbf{F(s)}\}$	$\mathbf{F(s)} = \mathcal{L}\{f(t)\}$
$\delta(t)$	1	$\frac{1}{\beta-\alpha}(e^{-\alpha t} - e^{-\beta t})u(t)$	$\frac{1}{(s+\alpha)(s+\beta)}$
$u(t)$	$\frac{1}{s}$	$\sin \omega t\, u(t)$	$\frac{\omega}{s^2+\omega^2}$
$tu(t)$	$\frac{1}{s^2}$	$\cos \omega t\, u(t)$	$\frac{s}{s^2+\omega^2}$
$\frac{t^{n-1}}{(n-1)!}u(t),\ n = 1, 2, \ldots$	$\frac{1}{s^n}$	$\sin(\omega t + \theta)\, u(t)$	$\frac{s\sin\theta + \omega\cos\theta}{s^2+\omega^2}$
$e^{-\alpha t}u(t)$	$\frac{1}{s+\alpha}$	$\cos(\omega t + \theta)\, u(t)$	$\frac{s\cos\theta - \omega\sin\theta}{s^2+\omega^2}$
$te^{-\alpha t}u(t)$	$\frac{1}{(s+\alpha)^2}$	$e^{-\alpha t}\sin \omega t\, u(t)$	$\frac{\omega}{(s+\alpha)^2+\omega^2}$
$\frac{t^{n-1}}{(n-1)!}e^{-\alpha t}u(t),\ n = 1, 2, \ldots$	$\frac{1}{(s+\alpha)^n}$	$e^{-\alpha t}\cos \omega t\, u(t)$	$\frac{s+\alpha}{(s+\alpha)^2+\omega^2}$

Laplace Transform Operations

Operation	$f(t)$	$\mathbf{F(s)}$
Addition	$f_1(t) \pm f_2(t)$	$\mathbf{F_1(s)} \pm \mathbf{F_2(s)}$
Scalar multiplication	$kf(t)$	$k\mathbf{F(s)}$
Time differentiation	$\frac{df}{dt}$	$\mathbf{sF(s)} - f(0^-)$
Time integration	$\int_{0^-}^{t} f(t)\,dt$	$\frac{1}{\mathbf{s}}\mathbf{F(s)}$
Time shift	$f(t-a)u(t-a), a \geq 0$	$e^{-as}\mathbf{F(s)}$
Frequency shift	$f(t)e^{-at}$	$\mathbf{F(s}+a)$
Frequency differentiation	$tf(t)$	$-\frac{d\mathbf{F(s)}}{d\mathbf{s}}$
Frequency integration	$\frac{f(t)}{t}$	$\int_{\mathbf{s}}^{\infty} \mathbf{F(s)}\,d\mathbf{s}$
Scaling	$f(at), a \geq 0$	$\frac{1}{a}\mathbf{F}\left(\frac{\mathbf{s}}{a}\right)$
Initial value theorem	$f(0^+)$	$\lim_{\mathbf{s}\to\infty} \mathbf{sF(s)}$
Final value theorem	$f(\infty)$	$\lim_{\mathbf{s}\to 0} \mathbf{sF(s)}$, all poles of $\mathbf{sF(s)}$ in LHP

Laplace transform to solve circuit problems

- Option-1:
  - Write the set of differential equations in the time domain that describe the relationship between voltage and current for the circuit.
  - Laplace transform the equations to eliminate the integrals and derivatives, and solve these equations for **V(s)** and **I(s)**.
  - Inverse-Laplace transform to get *v*(t) and *i*(t).

- Option-2:
  - Laplace transform the circuit and use DC circuit analysis to find **V(s)** and **I(s)**.
  - Inverse-Laplace transform to get *v*(t) and *i*(t).

Laplace Transform of RLC elements

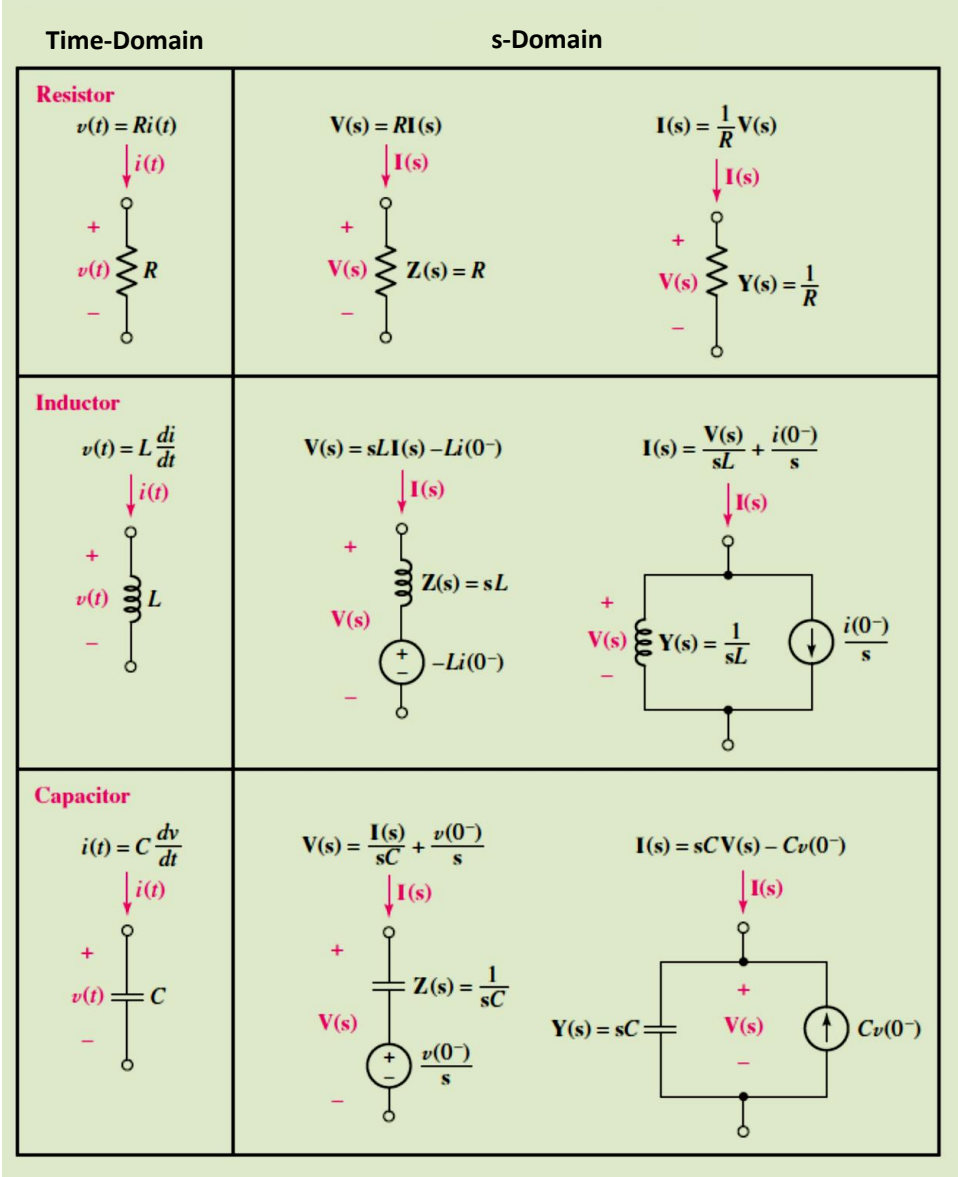

R: Resistor
C: Capacitor
L: Inductor
v(t): Voltage in time-domain
i(t): Current in time-domain
V(s): Voltage in s-domain
I(s): Current in s-domain
Z(s): Impedance in s-domain
Y(s): Admittance in s-domain
$v(0^-)$: initial condition of capacitor
$i(0^-)$: initial condition of inductor

Steps to solve circuit problems using LT

1. Redraw the circuit – note that you need to find the initial conditions and decide how to represent them in the circuit.
2. Any voltages or currents with values given are Laplace transformed using the functional and operational tables.
3. Any voltages or currents represented symbolically, using i(t) and v(t), are replaced with the symbols **I(s)** and **V(s)**.
4. All component values are replaced with the corresponding impedance, **Z(s)** or admittance, **Y(s)**.
5. Use DC circuit analysis techniques to write the s-domain equations and solve them. Check your solutions with IVT and FVT.
6. Inverse-Laplace transform s-domain solutions to get time-domain solutions. Check your solutions at $t = 0$ and $t = \infty$.

Example-1

There is no initial energy stored in this circuit. Find i_1(t) and i_2(t) for t > 0.

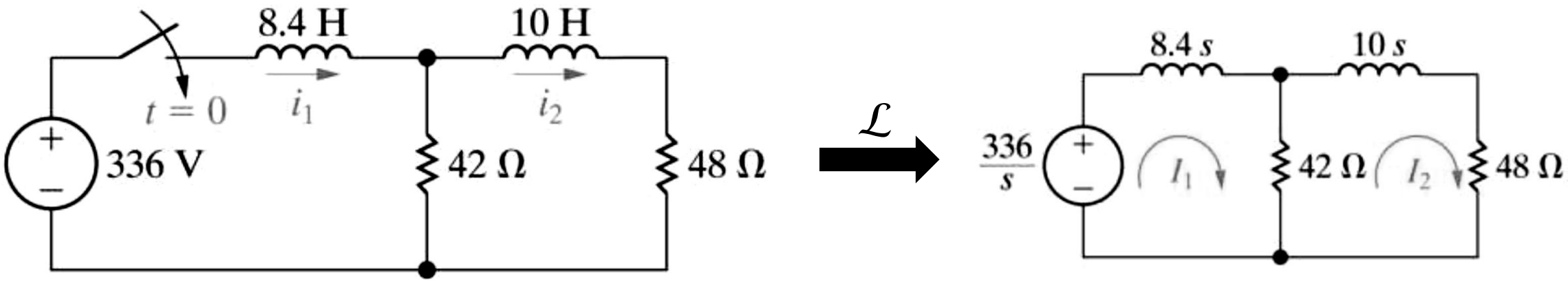

$$-\frac{336}{s}+(42+8.4s)I_1-42I_2=0$$

$$(10s+90)I_2-42I_1=0$$

$$\Rightarrow \qquad I_1=\frac{10s+90}{42}I_2$$

Substituting, $$-\frac{336}{s}+\left[\frac{(42+8.4s)(10s+90)}{42}-42\right]I_2=0$$

$$\Rightarrow \qquad I_2(s)=\frac{336(42)}{s[(42+8.4s)(10s+90)-42^2}=\frac{168}{s^3+14s^2+24s}$$

$$I_1(s)=\frac{10s+90}{42}\left[\frac{168}{s^3+14s^2+24s}\right]=\frac{40s+360}{s^3+14s^2+24s}$$

Example-1

- Taking the inverse Laplace transform of $\boldsymbol{I_1(s)}$ and $\boldsymbol{I_2(s)}$ to get the i_1(t) and i_2(t).
- First, use partial fraction and use the functional table.

$$I_1(s) = \frac{40s+360}{s^3+14s^2+24s} = \frac{40(s+9)}{s(s+2)(s+12)} = \frac{K_1}{s} + \frac{K_2}{s+2} + \frac{K_3}{s+12}$$

$$K_1 = \left.\frac{40s+360}{(s+2)(s+12)}\right|_{s=0} = 15; \qquad K_2 = \left.\frac{40s+360}{s(s+12)}\right|_{s=-2} = -14; \qquad K_3 = \left.\frac{40s+360}{s(s+2)}\right|_{s=-12} = -1$$

$$\therefore \qquad I_1(s) = \frac{15}{s} + \frac{-14}{s+2} + \frac{-1}{s+12}$$

$$i_1(t) = \mathcal{L}^{-1}\left\{\frac{15}{s} + \frac{-14}{s+2} + \frac{-1}{s+12}\right\}$$

$$= [15 - 14e^{-2t} - e^{-12t}]u(t) \text{ A}$$

The forced response is $15u(t)$ A

The natural response is $[-14e^{-2t} - e^{-12t}]u(t)$ A

Example-1

$$I_2(s) = \frac{168}{s^3 + 14s^2 + 24s} = \frac{168}{s(s+2)(s+12)} = \frac{K_1}{s} + \frac{K_2}{s+2} + \frac{K_3}{s+12}$$

$$K_1 = \left.\frac{168}{(s+2)(s+12)}\right|_{s=0} = 7; \qquad K_2 = \left.\frac{168}{s(s+12)}\right|_{s=-2} = -8.4; \qquad K_3 = \left.\frac{168}{s(s+2)}\right|_{s=-12} = 1.4$$

$$\therefore \qquad I_2(s) = \frac{7}{s} + \frac{-8.4}{s+2} + \frac{1.4}{s+12}$$

$$i_2(t) = \mathcal{L}^{-1}\left\{\frac{7}{s} + \frac{-8.4}{s+2} + \frac{1.4}{s+12}\right\}$$

$$= [7 - 8.4e^{-2t} + 1.4e^{-12t}]u(t) \text{ A}$$

The forced response is $7u(t)$ A

The natural response is $[-8.4e^{-2t} + 1.4e^{-12t}]u(t)$ A

Example-1

Check the answers at t = 0 and t = ∞ to make sure the circuit and the equations match!

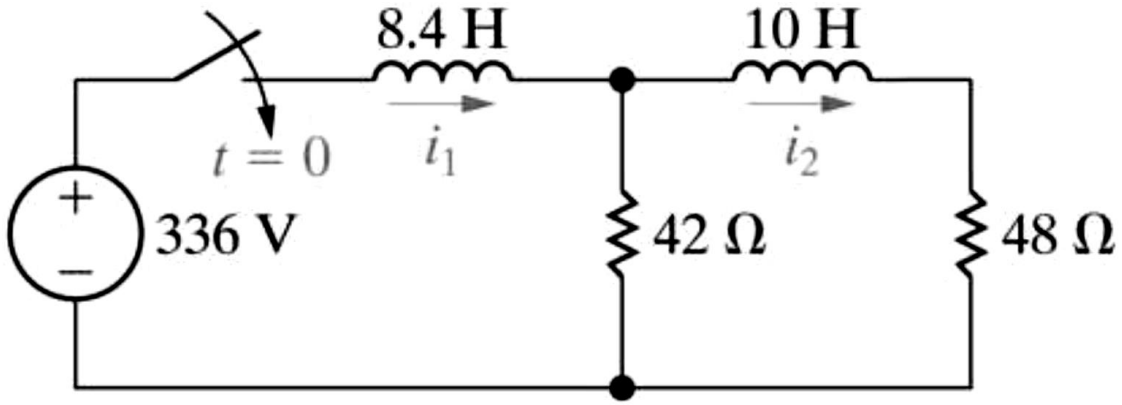

At t = 0, the circuit has no initial stored energy, so $i_1(0) = 0$ and $i_2(0) = 0$.

At t = ∞

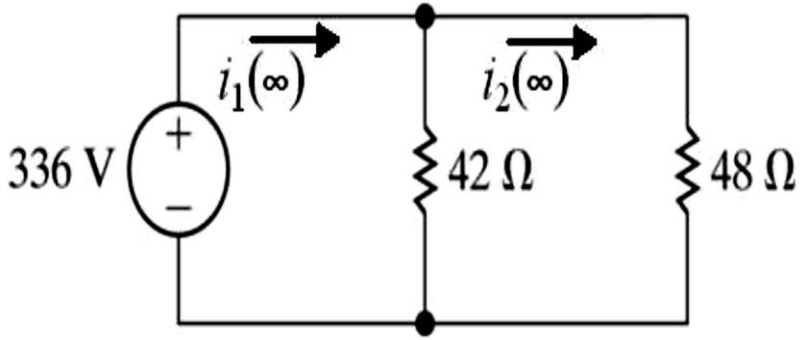

$i_1(\infty)$=336/42+$i_2(\infty)$=15 A

$i_2(\infty)$=336/48=7 A

$$i_1(t) = (15 - 14e^{-2t} - e^{-12t})u(t)A$$

$$i_2(t) = (7 - 8.4e^{-2t} + 1.4e^{-12t})u(t)A$$

$i_1(0)$=(15-14-1)(1)=0

$i_2(0)$=(7-8.4+1.4)(1)=0

$i_1(\infty)$=(15-0-0)(1)=15 A

$i_2(\infty)$=(7-0+0)(1)=7 A

Example-1

- Check your solutions with IVT

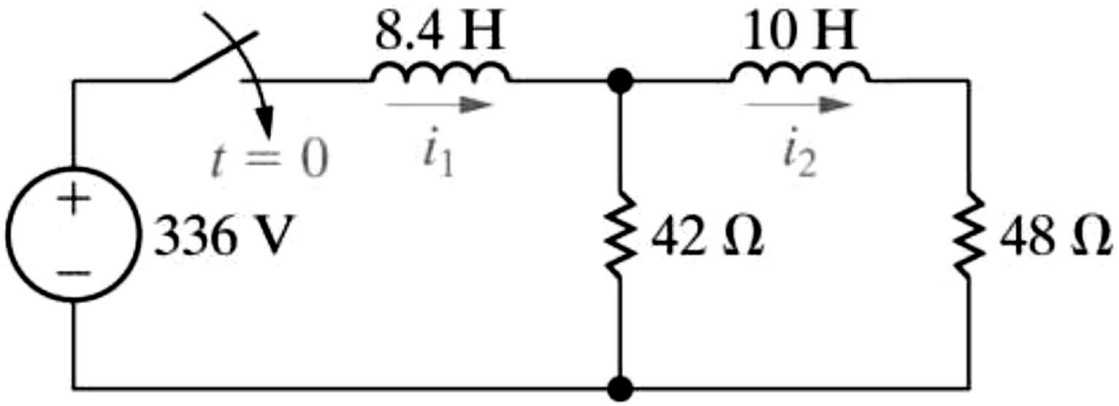

$$I_1(s) = \frac{40s + 360}{s^3 + 14s^2 + 24s}$$

$$\lim_{t \to 0} i_1(t) = \lim_{s \to \infty} sI_1(s)$$

$$= \lim_{s \to \infty} \frac{40s^2 + 360s}{s^3 + 14s^2 + 24s}$$

$$= \lim_{1/s \to 0} \frac{(40/s) + (360/s^2)}{1 + (14/s) + (24/s^2)}$$

$$= 0 \text{ A}$$

$$I_2(s) = \frac{168}{s^3 + 14s^2 + 24s}$$

$$= \lim_{s \to \infty} \frac{168s}{s^3 + 14s^2 + 24s}$$

$$= \lim_{1/s \to 0} \frac{(168/s^2)}{1 + (14/s) + (24/s^2)}$$

$$= 0 \text{ A}$$

Example-1

- Check your solutions with FVT

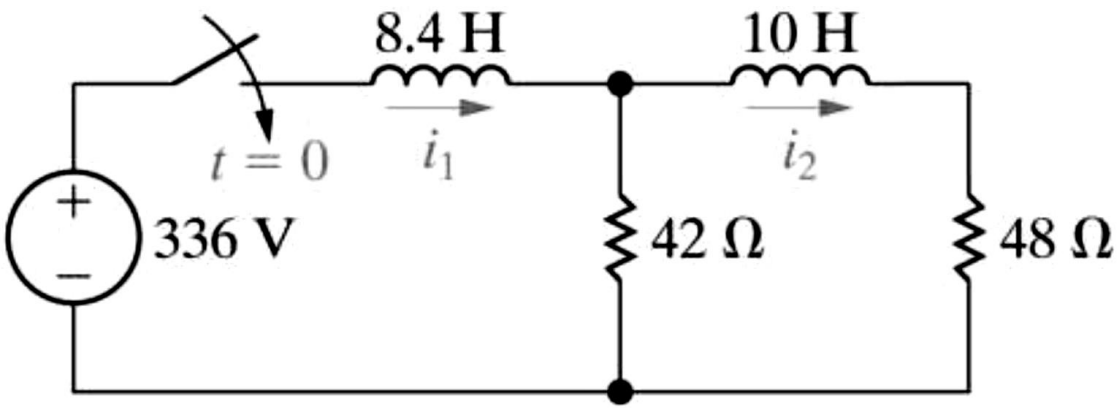

$$I_1(s) = \frac{40s + 360}{s^3 + 14s^2 + 24s}$$

$$\lim_{t\to\infty} i_1(t) = \lim_{s\to 0} sI_1(s)$$

$$= \lim_{s\to 0} \frac{40s^2 + 360s}{s^3 + 14s^2 + 24s}$$

$$= \lim_{s\to 0} \frac{40s + 360}{s^2 + 14s + 24}$$

$$= \frac{360}{24} = 15\text{ A}$$

$$I_2(s) = \frac{168}{s^3 + 14s^2 + 24s}$$

$$= \lim_{s\to 0} \frac{168s}{s^3 + 14s^2 + 24s}$$

$$= \lim_{s\to 0} \frac{168}{s^2 + 14s + 24}$$

$$= \frac{168}{24} = 7\text{ A}$$

Example-2

Find $v_0(t)$ for $t > 0$.

$v_0(0^-)=0$ V
$i_0(0^-)=70/350=0.2$ A

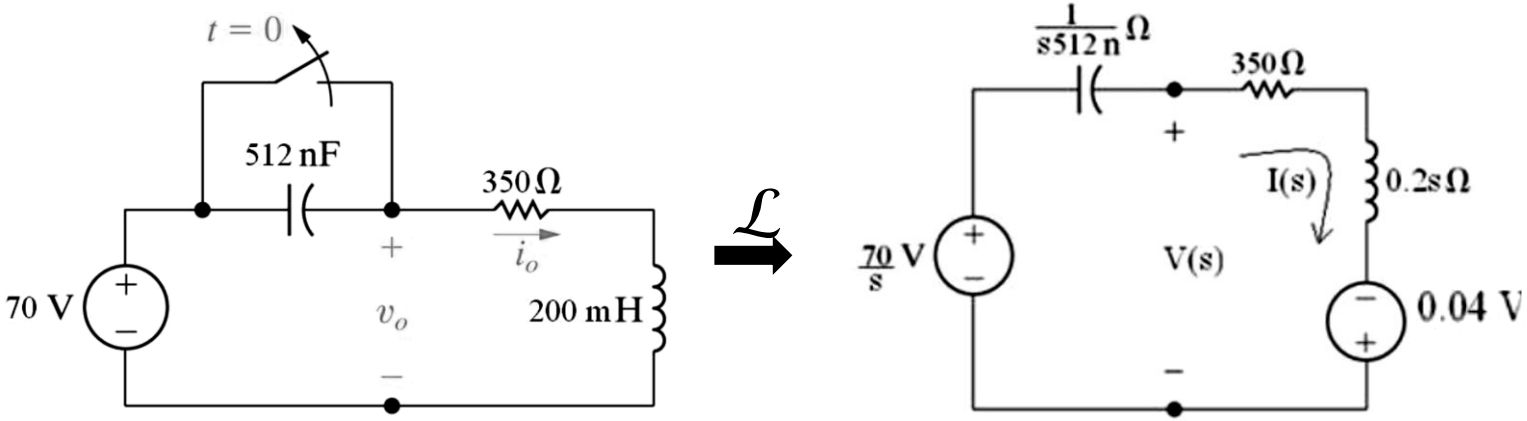

$$I(s) = \frac{70/s + 0.04}{1/s(512n) + 350 + 0.2s}$$

$$V(s) = (350 + 0.2s)I(s) - 0.04$$

$$= \frac{(350 + 0.2s)(70/s + 0.04)}{1/s(512n) + 350 + 0.2s} - 0.04$$

$$= \frac{70s - 268{,}125}{s^2 + 1750s + 9{,}765{,}625}$$

$$= \frac{70s - 268{,}125}{(s + 875 - j3000)(s + 875 + j3000)}$$

$$V_o(s) = \frac{70s - 268{,}125}{(s+875)^2 - (j3000)^2} = \frac{70s - 268{,}125}{(s+875)^2 + (3000)^2} = 70\left(\frac{s - 268125/70}{(s+875)^2 + (3000)^2}\right)$$

$$= 70\left(\frac{s+875}{(s+875)^2 + (3000)^2}\right) - 70\left(\frac{268125/70 + 875}{(s+875)^2 + (3000)^2}\right)$$

$$= 70\left(\frac{s+875}{(s+875)^2 + (3000)^2}\right) - \frac{3000}{3000}\left(\frac{329375}{(s+875)^2 + (3000)^2}\right)$$

$$= 70\left(\frac{s+875}{(s+875)^2 + (3000)^2}\right) - 109.19\left(\frac{3000}{(s+875)^2 + (3000)^2}\right)$$

$e^{-\alpha t}\sin\omega t\, u(t)$	$\frac{\omega}{(s+\alpha)^2 + \omega^2}$
$e^{-\alpha t}\cos\omega t\, u(t)$	$\frac{s+\alpha}{(s+\alpha)^2 + \omega^2}$

$$v_o(t) = \mathcal{L}^{-1}\left\{70\left(\frac{s + 875}{(s + 875)^2 + (3000)^2}\right) - 109.19\left(\frac{3000}{(s + 875)^2 + (3000)^2}\right)\right\}$$

$$= [70e^{-875t}\cos(3000t) - 109.19e^{-875t}\sin(3000t)]u(t)$$

Here, complex conjugate roots are present in the denominator.
Instead of using partial fraction, we use different approach

Tutorial 11

Q1: Determine V_o, I_1, I_{D1}, and I_{D2} for the parallel diode configuration as shown below.

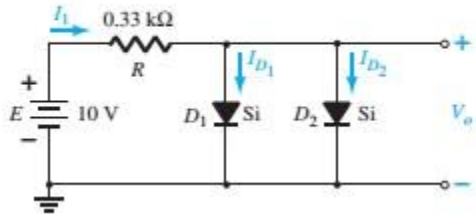

Q2: What type of gate is this?

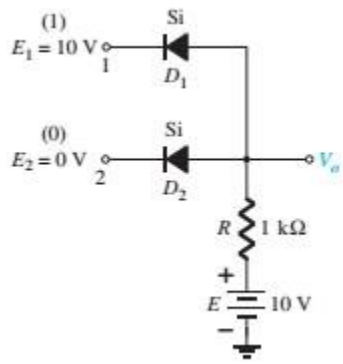

Q3:

Figure 3.4(a) shows a circuit for charging a 12-V battery. If v_S is a sinusoid with 24-V peak amplitude, find the fraction of each cycle during which the diode conducts. Also, find the peak value of the diode current and the maximum reverse-bias voltage that appears across the diode.

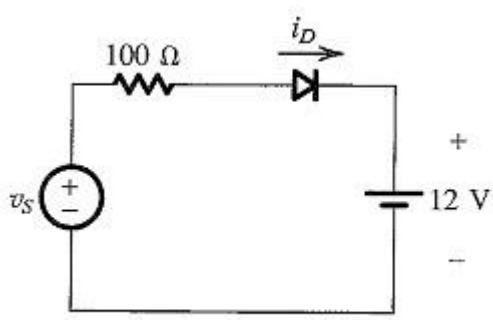

Q4:

Determine the current I_D and the diode voltage V_D for the circuit in Fig. 3.10 with $V_{DD} = 5$ V and $R = 1$ kΩ. Assume that the diode has a current of 1 mA at a voltage of 0.7 V and that its voltage drop changes by 0.1 V for every decade change in current.

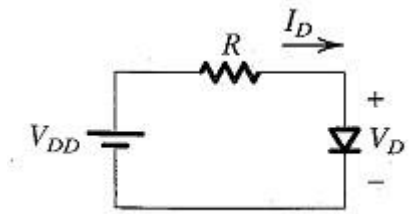

Q5: For circuit shown below: find vo/vi.

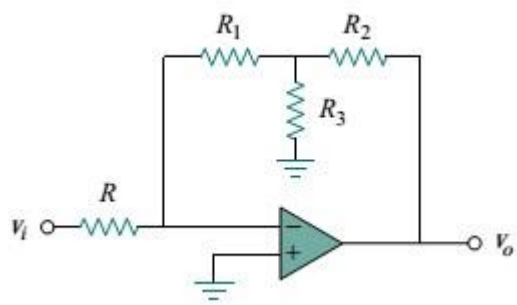

Tutorial 11 Solutions

Q1:

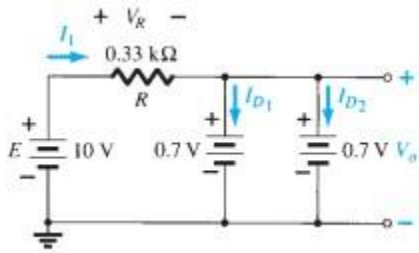

Solution: For the applied voltage the "pressure" of the source acts to establish a current through each diode in the same direction as shown in Fig. 2.29. Since the resulting current direction matches that of the arrow in each diode symbol and the applied voltage is greater than 0.7 V, both diodes are in the "on" state. The voltage across parallel elements is always the same and

$$V_o = \mathbf{0.7\ V}$$

The current is

$$I_1 = \frac{V_R}{R} = \frac{E - V_D}{R} = \frac{10\ \text{V} - 0.7\ \text{V}}{0.33\ \text{k}\Omega} = \mathbf{28.18\ mA}$$

Assuming diodes of similar characteristics, we have

$$I_{D_1} = I_{D_2} = \frac{I_1}{2} = \frac{28.18\ \text{mA}}{2} = \mathbf{14.09\ mA}$$

This example demonstrates one reason for placing diodes in parallel. If the current rating of the diodes of Fig. 2.28 is only 20 mA, a current of 28.18 mA would damage the device if it appeared alone in Fig. 2.28. By placing two in parallel, we limit the current to a safe value of 14.09 mA with the same terminal voltage.

Q2:

Solution: Note in this case that an independent source appears in the grounded leg of the network. For reasons soon to become obvious, it is chosen at the same level as the input logic level. The network is redrawn in Fig. 2.43 with our initial assumptions regarding the state of the diodes. With 10 V at the cathode side of D_1 it is assumed that D_1 is in the "off" state even though there is a 10-V source connected to the anode of D_1 through the resistor.

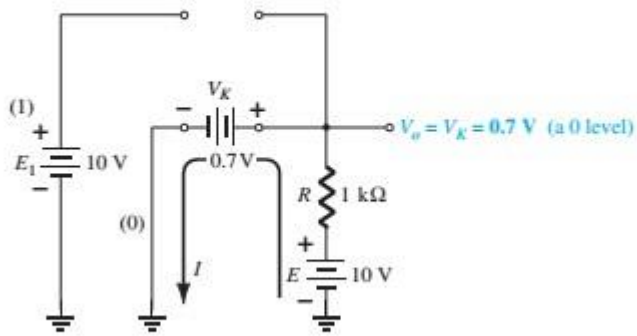

FIG. 2.43
Substituting the assumed states for the diodes of Fig. 2.42.

However, recall that we mentioned in the introduction to this section that the use of the approximate model will be an aid to the analysis. For D_1, where will the 0.7 V come from if the input and source voltages are at the same level and creating opposing "pressures"? D_2 is assumed to be in the "on" state due to the low voltage at the cathode side and the availability of the 10-V source through the 1-kΩ resistor.

For the network of Fig. 2.43 the voltage at V_o is 0.7 V due to the forward-biased diode D_2. With 0.7 V at the anode of D_1 and 10 V at the cathode, D_1 is definitely in the "off" state. The current I will have the direction indicated in Fig. 2.43 and a magnitude equal to

$$I = \frac{E - V_K}{R} = \frac{10\text{ V} - 0.7\text{ V}}{1\text{ k}\Omega} = \mathbf{9.3\text{ mA}}$$

Q3:

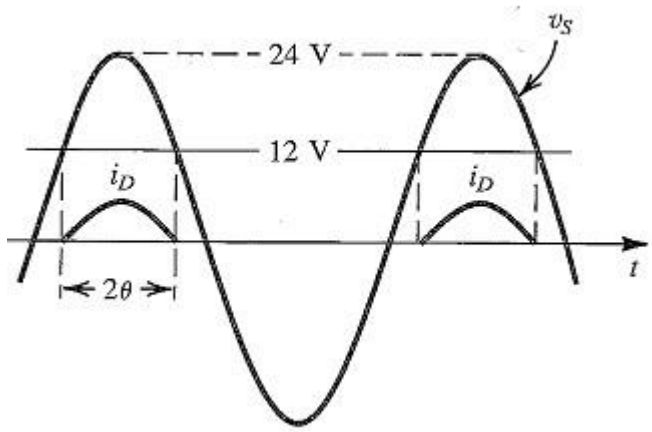

Solution

The diode conducts when v_S exceeds 12 V, as shown in Fig. 3.4(b). The conduction angle is 2θ, where θ is given by

$$24 \cos\theta = 12$$

Thus $\theta = 60°$ and the conduction angle is 120°, or one-third of a cycle.

The peak value of the diode current is given by

$$I_d = \frac{24 - 12}{100} = 0.12 \text{ A}$$

The maximum reverse voltage across the diode occurs when v_S is at its negative peak and is equal to $24 + 12 = 36$ V.

Q4:

Solution

To begin the iteration, we assume that $V_D = 0.7$ V and use Eq. (3.7) to determine the current,

$$I_D = \frac{V_{DD} - V_D}{R}$$

$$= \frac{5 - 0.7}{1} = 4.3 \text{ mA}$$

We then use the diode equation to obtain a better estimate for V_D. This can be done by employing Eq. (3.5), namely,

$$V_2 - V_1 = 2.3nV_T \log \frac{I_2}{I_1}$$

For our case, $2.3nV_T = 0.1$ V. Thus,

$$V_2 = V_1 + 0.1 \log \frac{I_2}{I_1}$$

Substituting $V_1 = 0.7$ V, $I_1 = 1$ mA, and $I_2 = 4.3$ mA results in $V_2 = 0.763$ V. Thus the results of the first iteration are $I_D = 4.3$ mA and $V_D = 0.763$ V. The second iteration proceeds in a similar manner:

$$I_D = \frac{5 - 0.763}{1} = 4.237 \text{ mA}$$

$$V_2 = 0.763 + 0.1 \log \left[\frac{4.237}{4.3}\right]$$

$$= 0.762 \text{ V}$$

Thus the second iteration yields $I_D = 4.237$ mA and $V_D = 0.762$ V. Since these values are not much different from the values obtained after the first iteration, no further iterations are necessary, and the solution is $I_D = 4.237$ mA and $V_D = 0.762$ V.

Q5 **Solution**

$v_o/v_i = -1/R*(R_1+R_2+ (R_1* R_2)/R_3)$

Q 1 The diodes and capacitors shown in figure below are ideal. Find the voltage across diode D1.

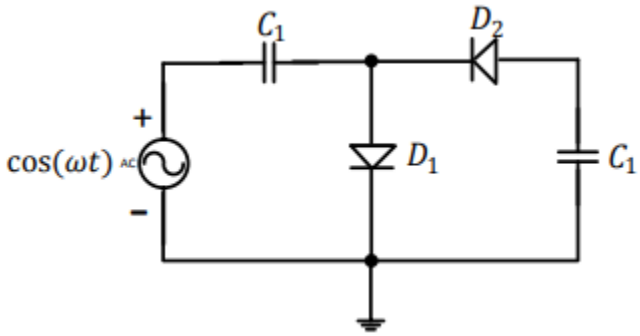

Q2 The i-v characterstics of the diode in the circuit are given below.

$$i = \begin{cases} \dfrac{v - 0.7}{500} A, & v \geq 0.7\ V \\ 0A, & v \geq 0.7\ V \end{cases}$$

Find the current 'i' in the circuit.

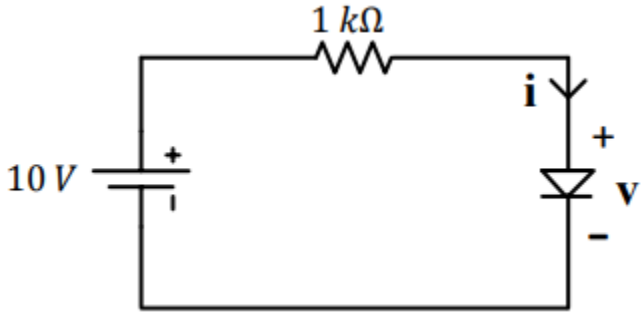

Q3 A voltage 1000sin(ωt) volts is applied across YZ. Assuming ideal diodes, find the voltage measured across W-X.

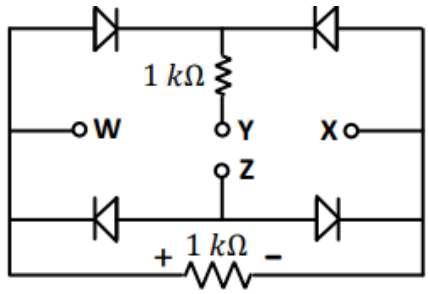

Q4 Two silicon diodes, with forward voltage of 0.7 V, are used in the circuit shown below. Find the range of "V", input voltage, for which $V=V_0$.

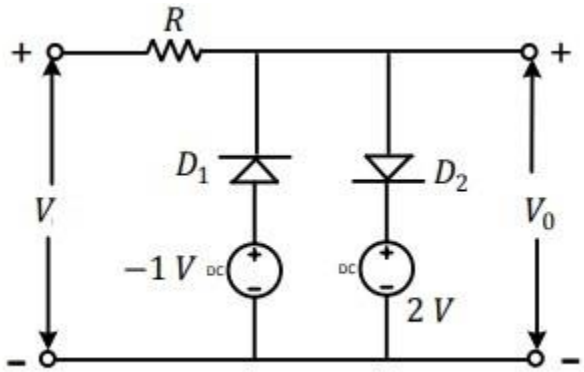

Q 5 The forward voltage of the diode used in the circuit below is 0.7. Diode is otherwise ideal. Find the current (in mA) in 4K ohms resistor.

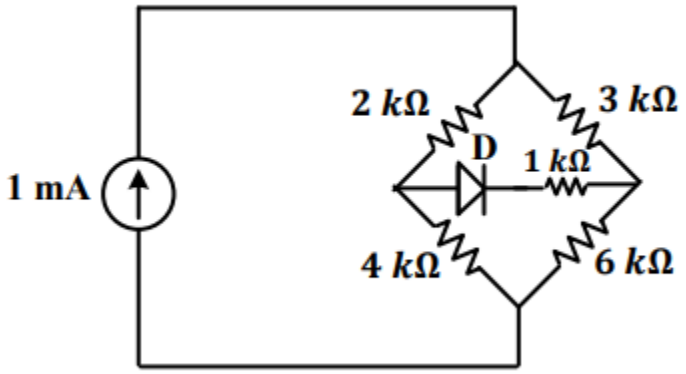

Solution 1

Given,

Voltage $v(t) = cos\ \omega t$

Find the voltage across the diode D_1 (diodes and capacitors are ideal) When the positive cycle of the input is applied diode D_1 is forward biased and D_2 is reverse biased.

Capacitor C_1 charges to maximum voltage (here 1 V)

When negative cycle of the input comes D_1 is reverse biased, so replaced by open.

Note that D_2 is reverse biased forever and can be replaced by a open switch.

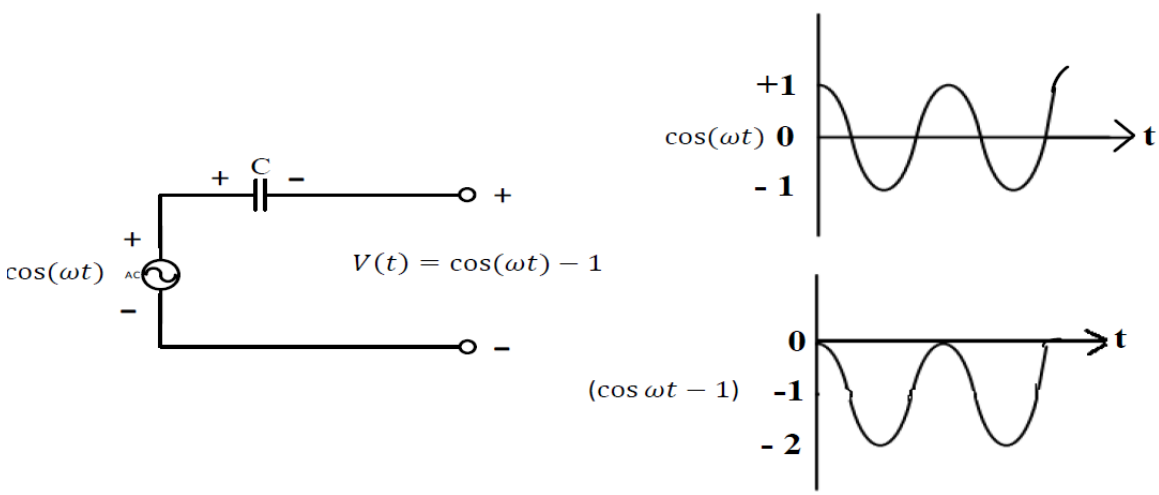

In this circuit C_1 & D_1 form a clamper circuit while D_2 and C_2 form peak detector. This cascaded circuit acts as peak to peak detector.

Solution 2

As per the given i – v characteristics

$$i = \frac{v-0.7}{500}\ A\ for\ v \geq 0.7\ V - - - - - - - - - - \quad -(1)$$

From the given circuit, $v = 10 - 1000i - - - - - (2)$

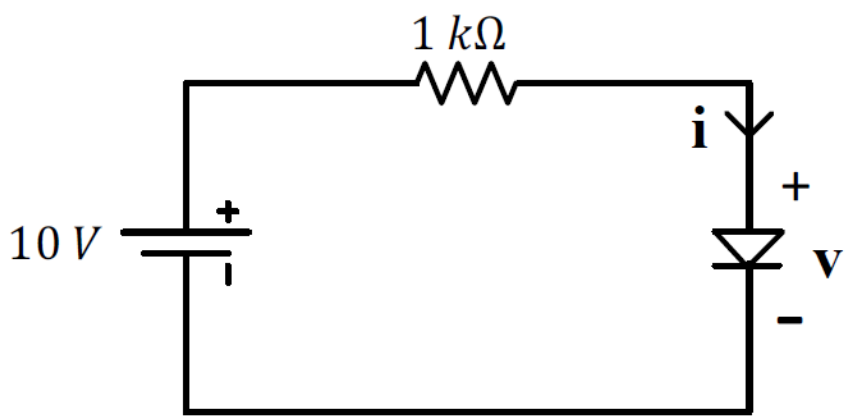

From equation (1) and (2) eliminate v

$$i = \frac{10 - 1000i - 0.7}{500} = \frac{9.3}{500} - 2i$$

$$or,\quad 3i = \frac{9.3}{500} \quad or \quad i = \frac{3.1}{500} = 6.2mA$$

Solution 3

Voltage applied across Y – Z terminals $v_i = 1000\ sin\ \omega t$

Diodes are assumed ideal

For positive cycle of the input

All four diodes are Reverse biased

$$V_W - V_X = 0$$

$$or,\ \ V_{WX} = 0$$

For negative cycle of the input

All diodes are forward biased i.e. short circuited

$$V_{WX} = V_W - V_X = 0$$

Thus,

V_{WX} is zero for all times

Solution 4

Given,

Forward voltage drop of the given Si diodes is 0.7V

Find, the range of Vi for which output voltage $V_0 = V_i$

Let us see the D_2 branch of the circuit.

D_2 will be forward biased when $V_i > 0.7 + 2 = 2.7V$

D_2 will be Reverse biased when $V_i < 2.7V$

See the branch D_1

D_1 will be forward biased when $V_i < -1 - 0.7 = 1.7V$

D_1 will be Reverse biased when $V_i > -1.7\ V$

When both the diodes will be Reverse biased (both shunt branches will be open) then $V_0 = V_{in}$

Thus, it will happen when

D_2 is Reverse biased i.e. $V_i < 2.7V$

D_1 is Reverse biased i.e. $V_i > -1.7V$

Thus,

$$-1.7V < V_i < 2.7V$$

Solution 5

The given circuit is a bridge circuit note that the cross arm product is same i.e.

$$2 \times 6 = 4 \times 3$$

$$12 = 12$$

So, bridge is balanced

So no current through 1 kΩ resistor

Now current through 4 kΩ resistor will be

$$I = \frac{9}{9+6} \times 1mA$$

$$= \frac{9}{15} mA = 0.6\ mA$$

Answer 0.6 mA