ECE113: Basic Electronics

Lecture 1: Introductory remarks, Course information and assessments

Dr. Sanat K Biswas, Assistant Professor

Office: B602, Research and Development Block

Email: sanat@iiitd.ac.in

INDRAPRASTHA INSTITUTE *of*
INFORMATION TECHNOLOGY
DELHI

About the instructor

- **Name**: Sanat K Biswas
- **Designation**: Assistant Professor
- **PhD (2013 - 2017)**: Australian Centre for Space Engineering Research, UNSW Sydney on Space Vehicle Navigation
- **M. Tech** in Aerospace Engg., IIT Bombay
- **B. E.** in Instrumentation and Electronics Engg., JU
- **Research Interest**: Estimation Algorithms, Non-linear Systems, Navigation, Guidance and Control, GNSS Technology
- **Website**: www.sanat-biswas.com
- **Courses**:
  - Satellite Navigation and Sensor Fusion (Monsoon)
  - Basic Electronics (Winter), for B.Tech 1st yr. students

Teaching staffs

Teaching Fellow:

Prashant Ranjan

Teaching Assistants:

Abhilasha Srivastava
Praveen Kumar Singh
Aakash Sharma
Ayesha Yadav
Ehtesham Ahmad Khan
Gothi Dhaval Vrajlal
Shivam Sharma
Vaibhav Verma
Dinesh Rano

Motivation

Motivation

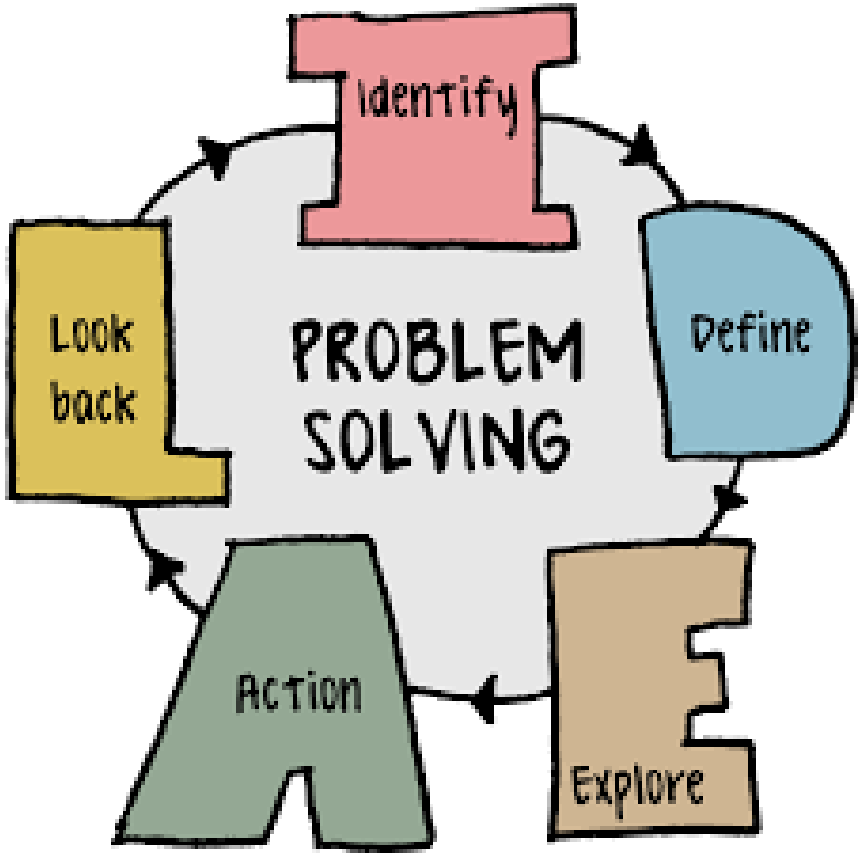

Course Outline

- Basic components of Electrical Circuits: Fundamental Electrical variables – charge, current, voltage and power; independent and dependent voltage and current sources, Ideal circuit elements – Resistor, Capacitor and Inductor. Constitutional relationship – Ohms Law;
- Basic concepts of Analysis of Resistive Networks: Nodes, Paths and Loops, Kirchoff's Voltage and Current Laws, Series and Parallel connection of Resistances and division voltage and current. Loop and Node Analysis.
- Network Theorems: Thevenin's Theorem, Norton's Theorem

Course Outline

- Superposition Theorem and Maximum Power Transfer Theorem.
- RC and RL circuits' response to Step and Direct input
- RLC circuits' response to Step and Direct input
- Concepts of impedance/admittance, Phasors and Representation
- RC, RL and RLC circuits' response to Alternating inputs (the response to alternating input will be handled only under steady state condition)

Course Outline

- Passive and Active Components: Operational Amplifier – Inverting configuration
- Operational Amplifier – Non-Inverting, Integrating and Differentiating configuration
- Diodes: Basic principle, Clipper, Clamper circuits and application
- LED, Zener Diode and Solar Cell
- Half Wave and Full Wave Rectifiers – Wave form and Ripple & its reduction.

Text books:

- William H. Hayt Jr., Jack E. Kemmerly and Steven M. Durbin, *Engineering Circuit analysis*. 8th Edition, Tata McGraw Hill
- Sedra, A. S. and Smith, K. C., *Microelectronic circuits*. 6th Edition, Oxford University Press

All the examples are from these text books unless specified

Assessment

- Assignments 15%
- Class tests 15%
- Laboratory 20%
- Mid Semester 20%
- End Semester 30%

Course communication

- All the announcements, assignments, lectures, lab materials will be shared through **google classroom**.
- No separate commutations shall be done using email, unless necessary.
- Consult course site at **google classroom** regularly

How to Join ECE113- Basic Electronics Section B in google classroom

- Log on to **google classroom** using your IIITD credentials
- Click on the + sign at the top right corner
- Select join class
- Enter this class code: **9fcps3h**

Lab

- Location: Lecture Block level 3
- Lab materials will be provided through google classroom
- From next week onward: **prepare for the lab beforehand**

Ground rules

- Be on time
- Bring your own calculator
- Keep mobile phone in silence mode and inside your bag
- Do not contain a discussion among your peers, let the rest of the class know what are your concerns (may be some other students have similar concerns too!)
- IIIT Delhi plagiarism policy will be strictly followed in this class

IIITD plagiarism policy

	Misconduct/use of unfair means in assignments/projects	Penalty
1.	First misconduct/use of unfair means during the entire stay in IIIT-Delhi	Zero in the assignment (awarded by faculty) + one letter grade less in the course.
2.	Second misconduct/use of unfair means during entire stay in IIIT-Delhi	Student is assigned an F grade in the course.
3.	Third or further misconduct/use of unfair means during the entire stay in IIIT-Delhi	Student is assigned an F grade in the course and the case is reported to DAC, who may suspend the student for 1 semester to a year.

https://www.iiitd.ac.in/sites/default/files/docs/education/2017/Plagiarism%20Policy%20-%20Updated.pdf

IIITD plagiarism policy

	Misconduct/use of unfair means in quiz/midsem/endsem	Penalty
1.	First misconduct/use of unfair means during the entire stay in IIIT-Delhi	Student is assigned an F grade in the course.
2.	Second misconduct/use of unfair means during the entire stay in IIIT-Delhi	Student is assigned an F grade in the course and student may be suspended from the program for 1-2 semesters by DAC.
3.	Third misconduct/use of unfair means during the entire stay in IIIT-Delhi	Student is assigned an F grade in the course and student's program may be terminated by DAC.

https://www.iiitd.ac.in/sites/default/files/docs/education/2017/Plagiarism%20Policy%20-%20Updated.pdf

Electrical quantities

- Charge: unit - Coulomb
- Current: unit - Ampere
- Voltage: unit - Volt
- Power: unit – Watt
- Resistance: unit - Ohm

Charge

- A physical property of matter which interacts with electromagnetic field
  - Experiences a force due to a electromagnetic field
  - Responsible for creating electric field
- The force can be calculated using Coulomb's Law:

$$F = \frac{K q_1 q_2}{d^2}$$

Notice the similarity with Newton's Law of Gravitation

- Two types of charges: +ve and –ve
- Same types of charges repel and unlike types attract
- Convention: charge of a proton is +ve and that of an electron is –ve

Charge

- Unit : Coulomb (C)
- -ve charge of an electron = 1.602×10^{-19} C

Notation convention:

Constant charge is represented as Q and time varying charge is represented as q(t)

Current

- Electric/ electronic circuits' function depends on flow of charge
- Current is defined as the instantaneous rate at which net positive charge move past a specific point/ cross-section at a specific direction:

$$i = \frac{dq}{dt}$$

- Unit: Ampere (A): 1 C/s
- Can vary with time (unless DC, in ideal case)

Current representation

- Direction is important

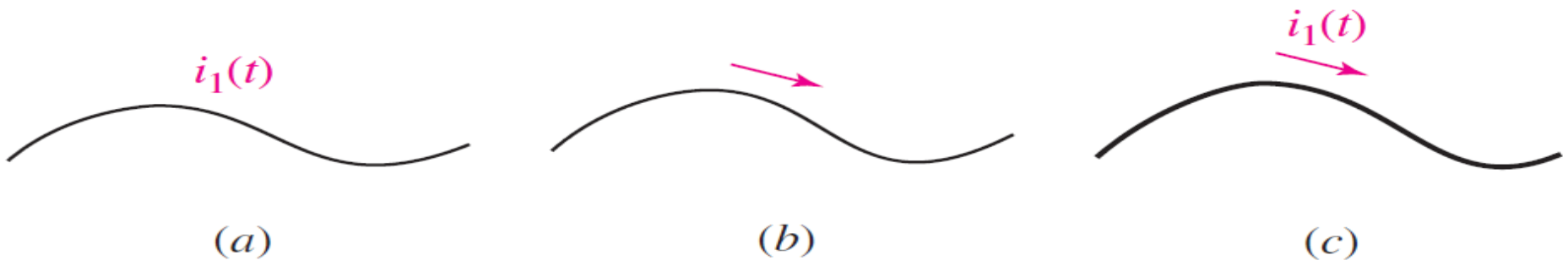

c) Is the correct representation

Current representation

Both are same

Types of current

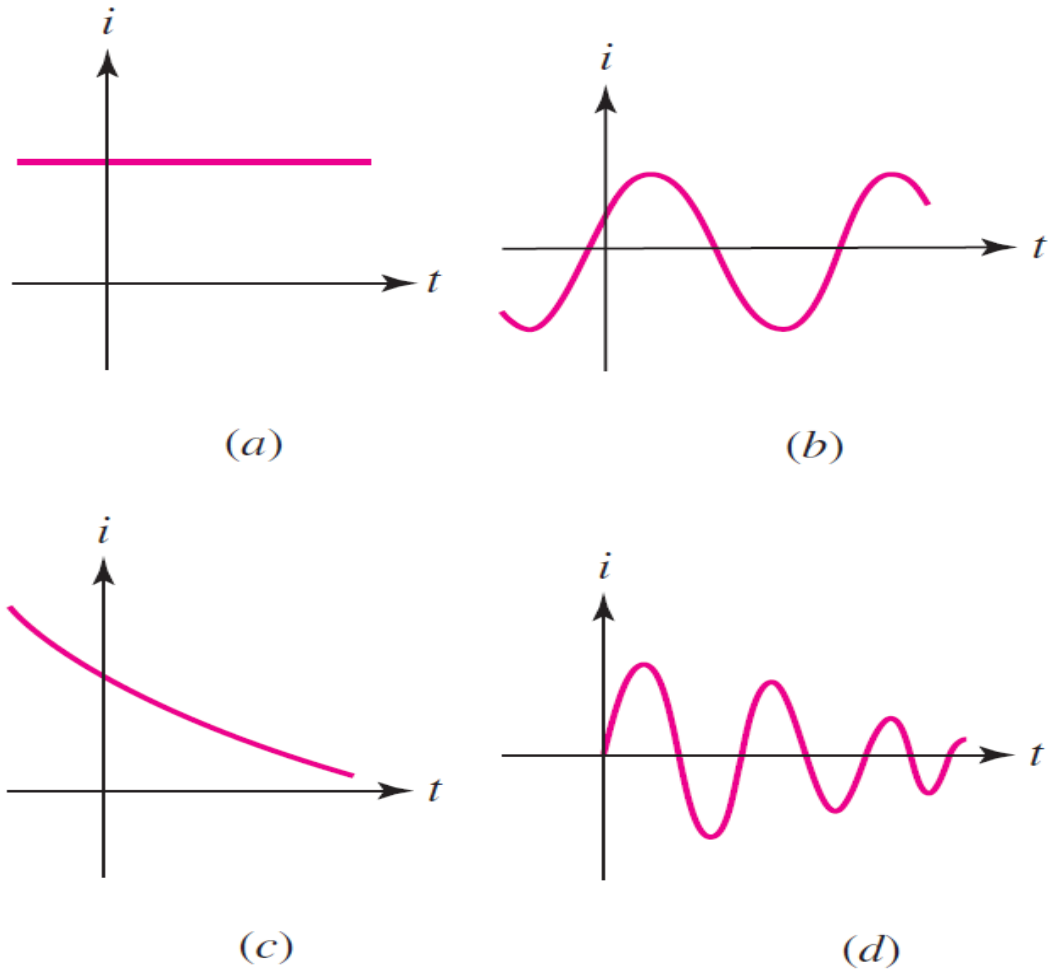

FIGURE 2.4 Several types of current: (*a*) Direct current (dc). (*b*) Sinusoidal current (ac). (*c*) Exponential current. (*d*) Damped sinusoidal current.

Voltage

To describe the rigorous definition of voltage, we must define Electric Potential

- **Electric Potential:** -ve of line integral of electric field over a path
- **Voltage :** Difference in potential between two points
- Essentially this is the work required to move an unit charge from one point to another
- **Unit :** Volt (V) – Work required is 1 Jule to move 1 C charge

Voltage representation

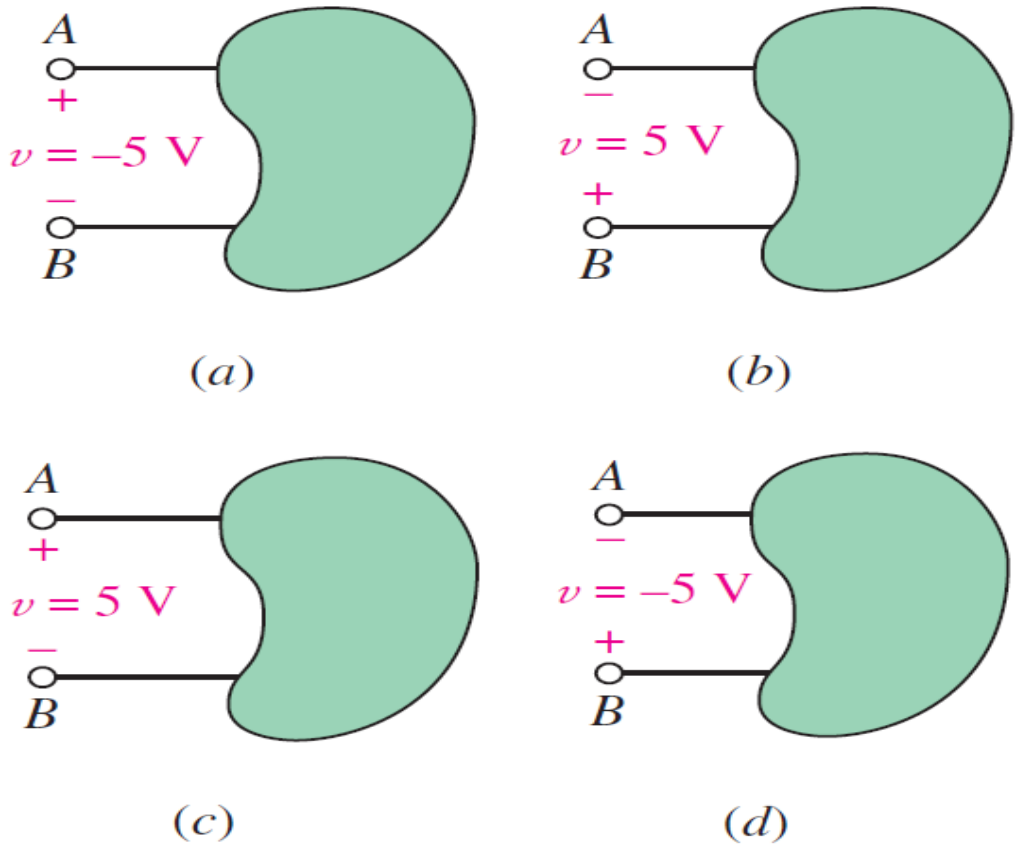

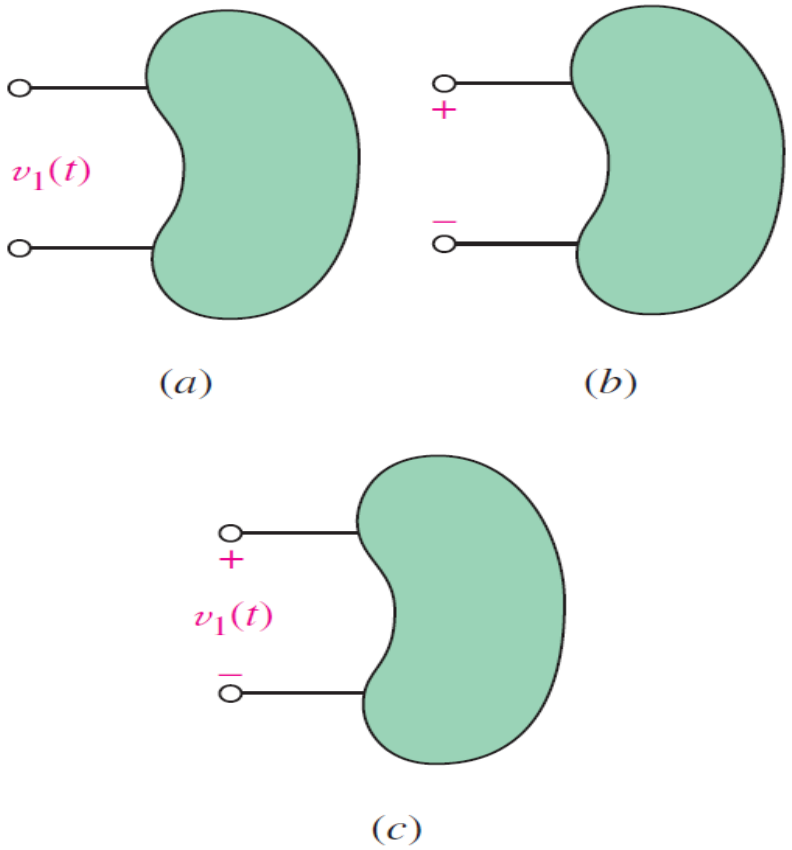

FIGURE 2.10 (*a, b*) These are inadequate definitions of a voltage. (*c*) A correct definition includes both a symbol for the variable and a plus-minus symbol pair.

Power

- Power: rate of work done (transferring energy)

$$P = \frac{W}{t} = \frac{W}{q} \cdot \frac{q}{t} = vi$$

- Unit: Watt – 1 J/s

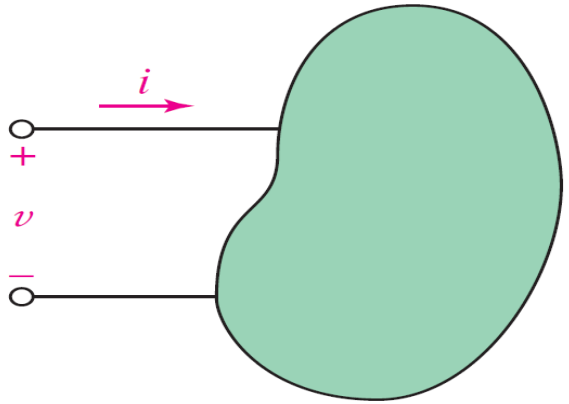

FIGURE 2.12 The power absorbed by the element is given by the product $p = vi$. Alternatively, we can say that the element generates or supplies a power $-vi$.

Passive sign convention

- When the current arrow is directed into the element at the plus-marked terminal, we satisfy the passive sign convention.
- If the current arrow is directed into the “+” marked terminal of an element, then $p = vi$ yields the *absorbed* power. A negative value indicates that power is actually being generated by the element.
- If the current arrow is directed out of the “+” terminal of an element, then $p = vi$ yields the *supplied* power. A negative value in this case indicates that power is being absorbed.

Circuit Elements

- Active Elements – supply average power greater than zero
- Passive elements – cannot supply average power that is greater than zero

Independent Voltage Source

- Terminal voltage is completely independent of the current
- + sign is a reference, does not necessarily mean that upper terminal is numerically +ve
- This is a theoretical notion, a mathematical model that can be used for further analysis

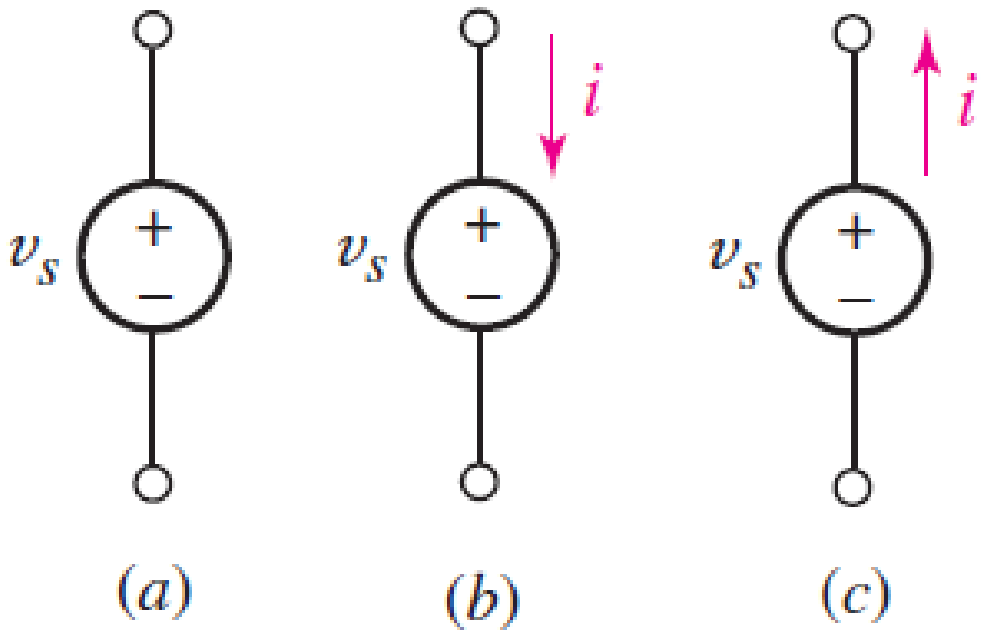

Independent Current Source

- Current is completely independent of the terminal voltage
- Again a theoretical notion
- Arrow denotes the direction
- Does not necessarily mean that terminal voltage difference will be 0
- Direction: +ve to –ve is +
- Direction: -ve to +ve is -

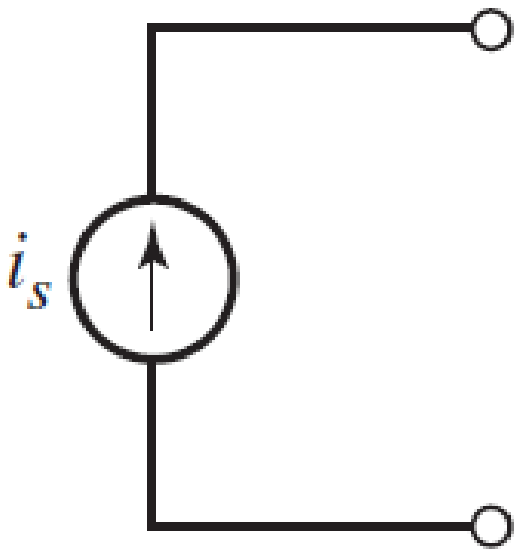

Dependent Sources

- These are also ideal sources
- Dependent on current or voltage at some other area of the circuit
- Again independent of terminal voltage/current

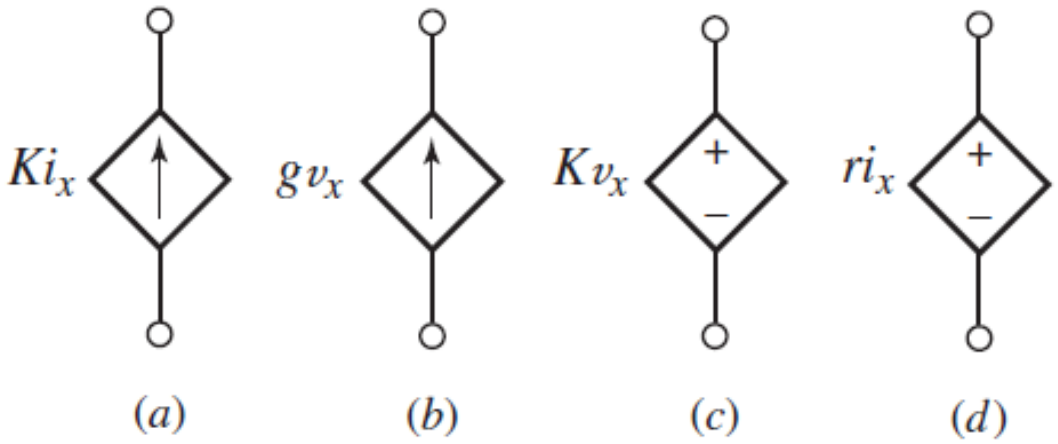

Example problem

Find the power *absorbed* by each element in the circuit in Fig

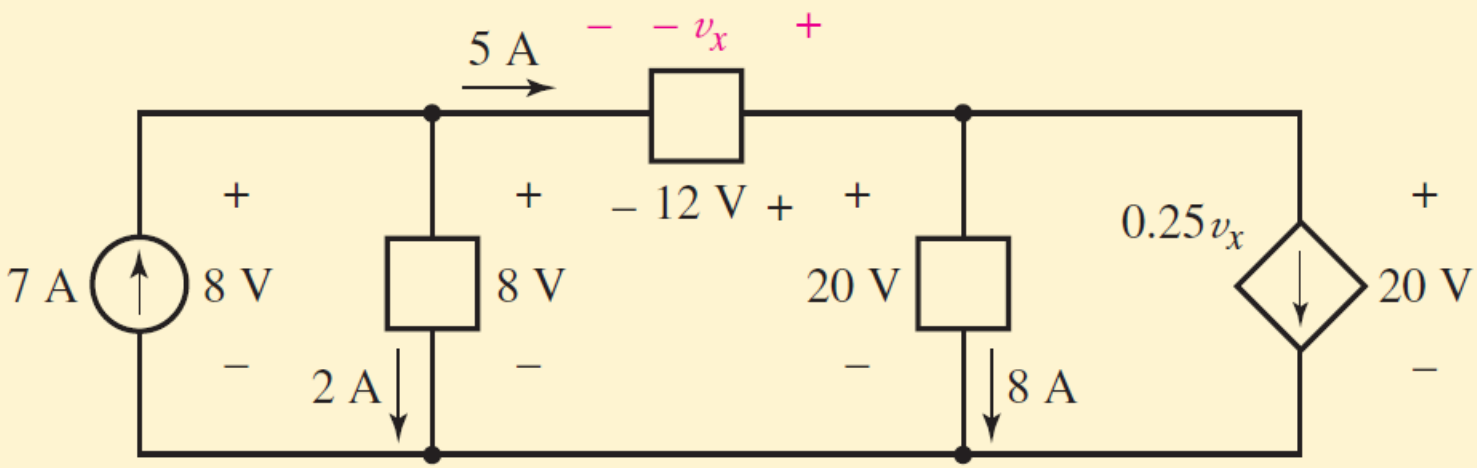

Ans: (left to right) –56 W; 16 W; –60 W; 160 W; –60 W.

ECE 113: Basic Electronics

Lecture 2: Voltage and current sources, resistor, Kirchoff's laws

Dr. Sanat K Biswas, Assistant Professor

Office: B602, Research and Development Block

Email: sanat@iiitd.ac.in

INDRAPRASTHA INSTITUTE *of*
INFORMATION TECHNOLOGY
DELHI

Resistor

- Resistance: A measure of difficulty to flow electrons through a circuit element
- Can be measured using Ohm's Law

$$V \; \alpha \; I$$

or

$$V = RI$$

Unit of resistance: Ohm (Ω)

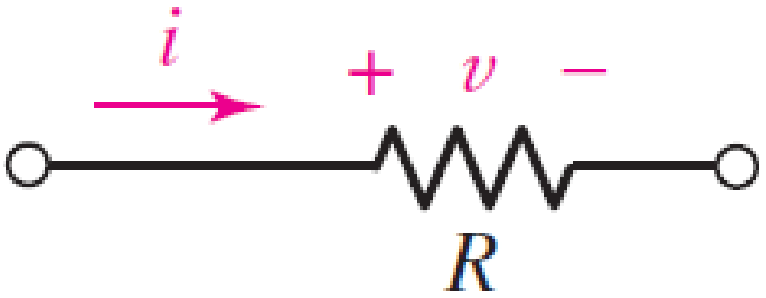

Resistor

- Relation with power:

$$P = VI = I^2R = \frac{V^2}{R}$$

EXAMPLE 2.3

The 560 Ω resistor shown in Fig. 2.24*b* is connected to a circuit which causes a current of 42.4 mA to flow through it. Calculate the voltage across the resistor and the power it is dissipating.

Ans: 23.7 V, 1.003/5/7 W

Resistor

- Resistivity: Resistance of per unit length per unit area of an uniform conductor

$$R = \frac{\rho L}{A}$$

- Conductance:

$$G = \frac{1}{R} = \frac{I}{V}$$

Power relation with conductance:

$$P = \frac{I^2}{G} = V^2 G$$

Example

EXAMPLE 2.4

A dc power link is to be made between two islands separated by a distance of 24 miles. The operating voltage is 500 kV and the system capacity is 600 MW. Calculate the maximum dc current flow, and estimate the resistivity of the cable, assuming a diameter of 2.5 cm and a solid (not stranded) wire.

Ans: 1200 A, R = 417 Ohm, area = 4.9 cm^2, length = 3.9*10^6 cm, rho = 520 mu Ohm. cm

Non-ideal Voltage Source

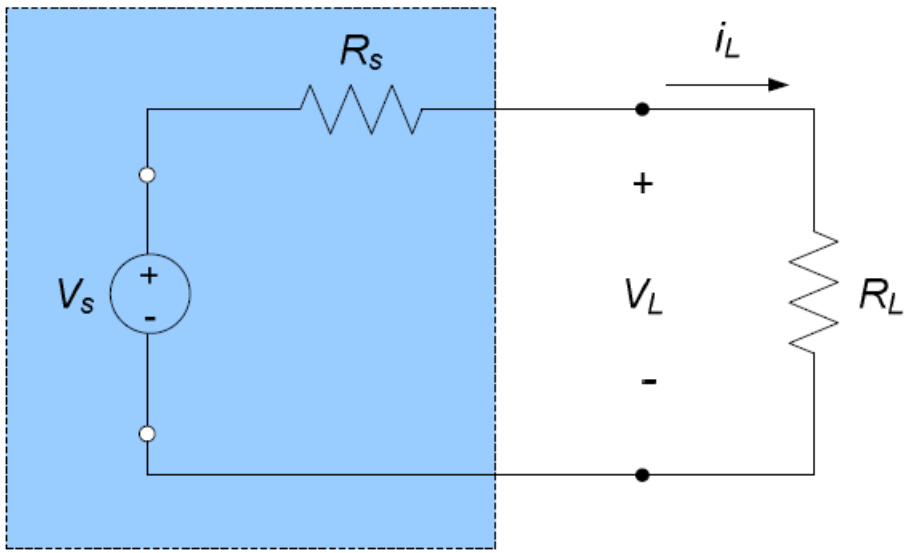

- Modelled as an ideal voltage source and internal resistance
- Implication:
  - When a load draws large current, supply voltage decreases and the converse
- Does not provide infinite power
- Note: Ideal voltage source means a source with zero internal resistance

Non-ideal current source

- Modelled as an ideal current source and internal resistance in parallel
- Implication:
  - Higher terminal voltage results in lower supply current
- Note: Ideal current source means a source with infinite internal resistance

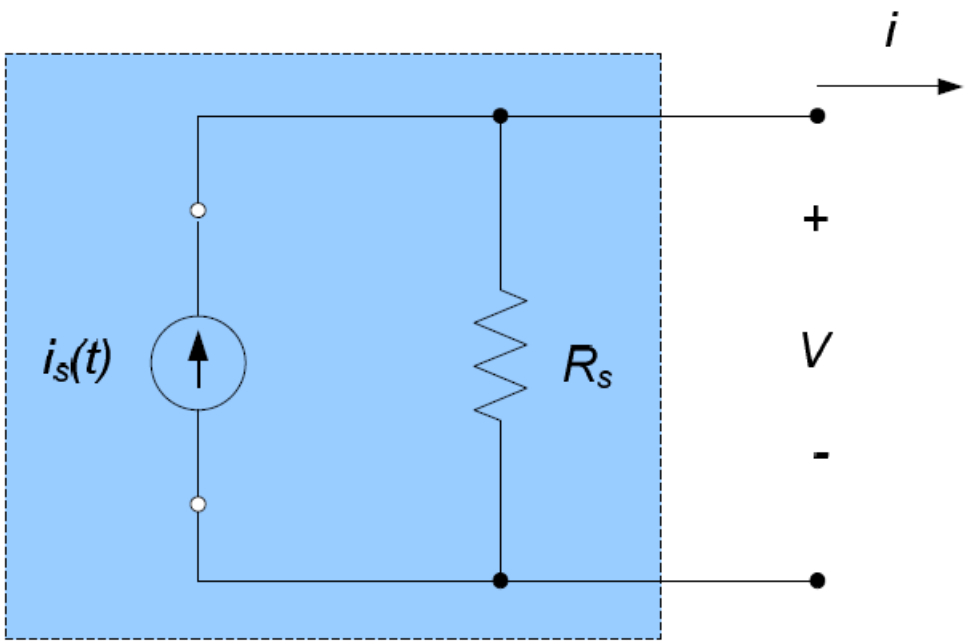

Nodes and loops

- Node: A point at which two or more circuit elements have a common connection
- Loop: If a set of nodes and elements are traversed in such a way that no node is encountered more than once, then the set of nodes and elements are called a path. If the start and end point of a path is the same node, then it is called a loop.

Node

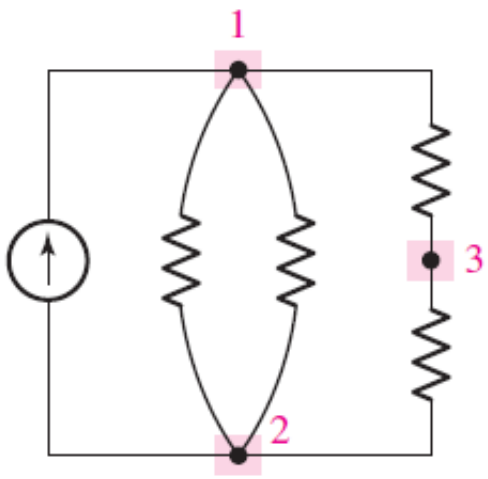

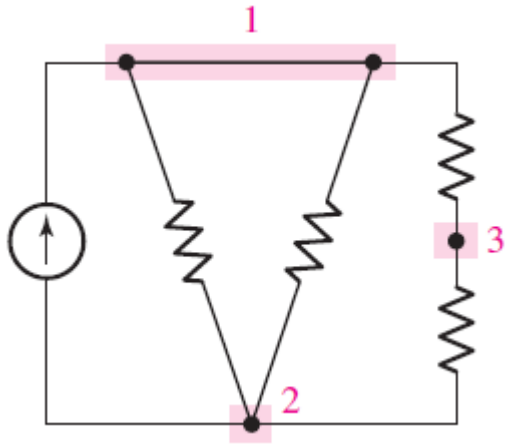

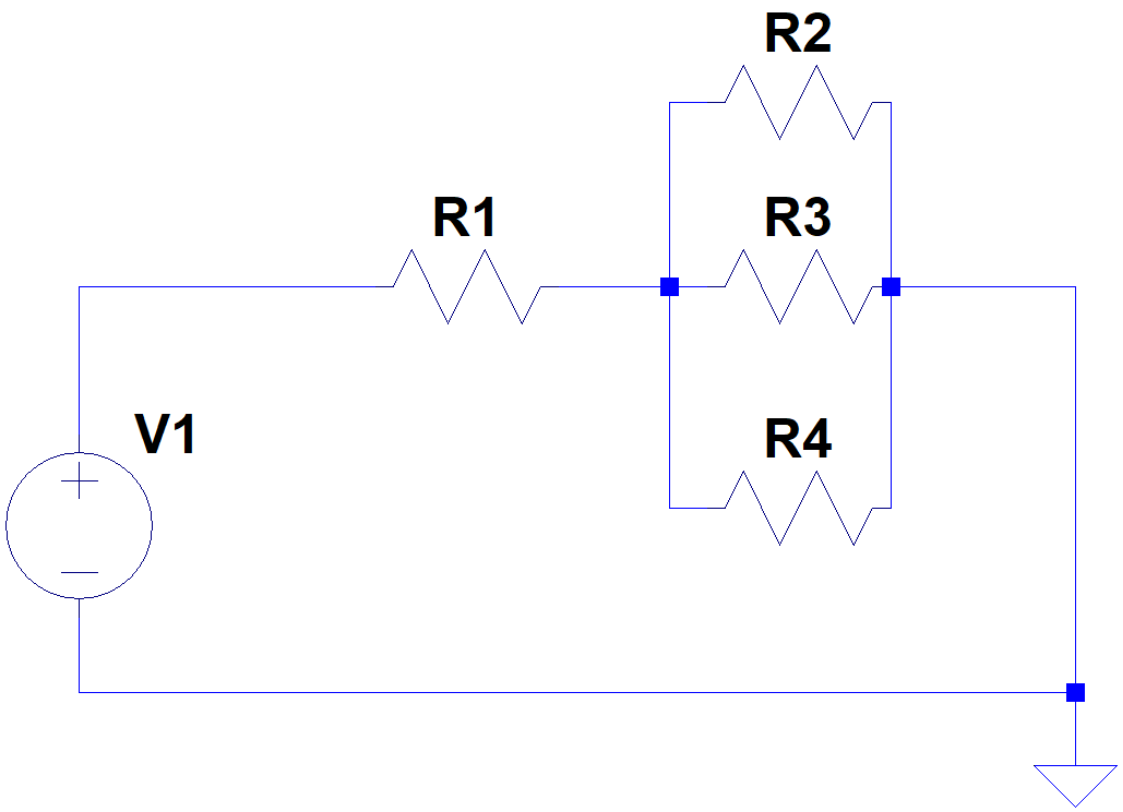

How many nodes are there in the above circuit?

Loop

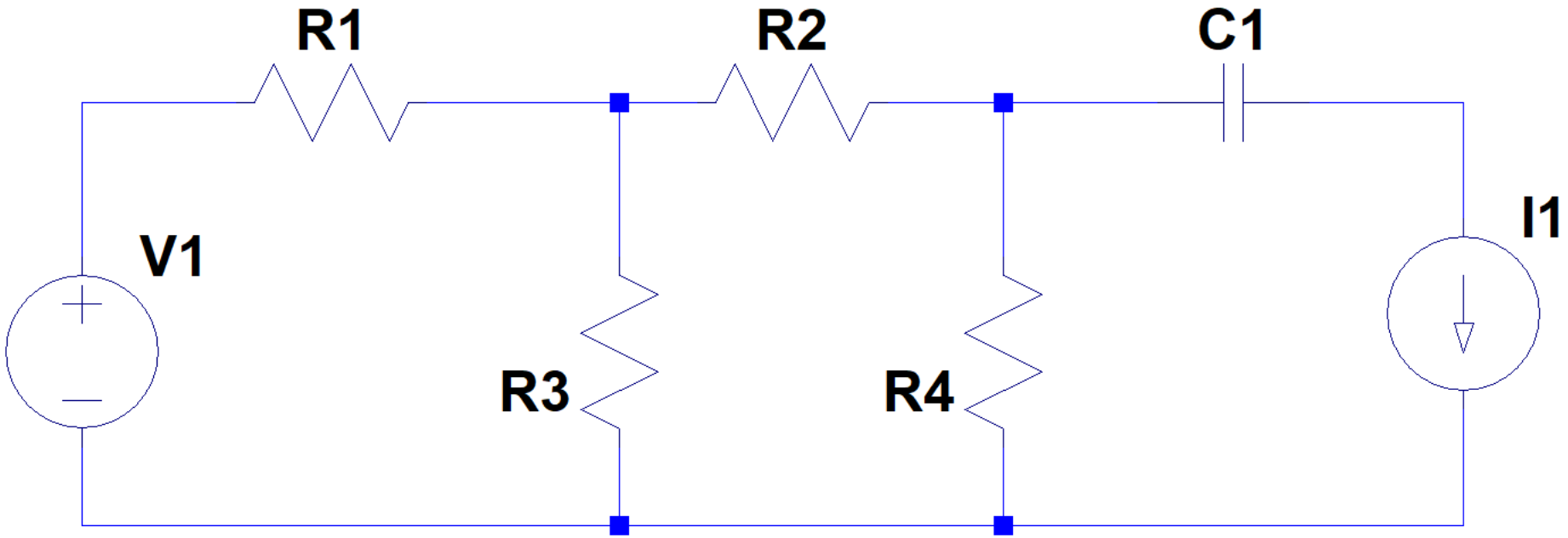

Kirchhoff's Laws

- Proposed by Gustav Kirchhoff [keerkh-hawf]
- Kirchhoff's Current Law (KCL): tells us the relationship of currents at a node
- Kirchhoff's Voltage Law (KVL): Tells us the relationship of voltages in a loop

Kirchhoff's Current Law

- The algebraic sum of the currents entering any node is zero
- Implication: current entering a node is equal to the current exiting the node
- Conservation of charge implies KCL

$$\sum_{n=1}^{N} i_n = 0$$

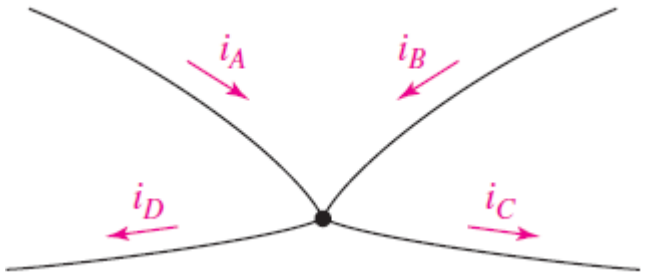

- **Current entering +ve, exiting -ve**

Example 1

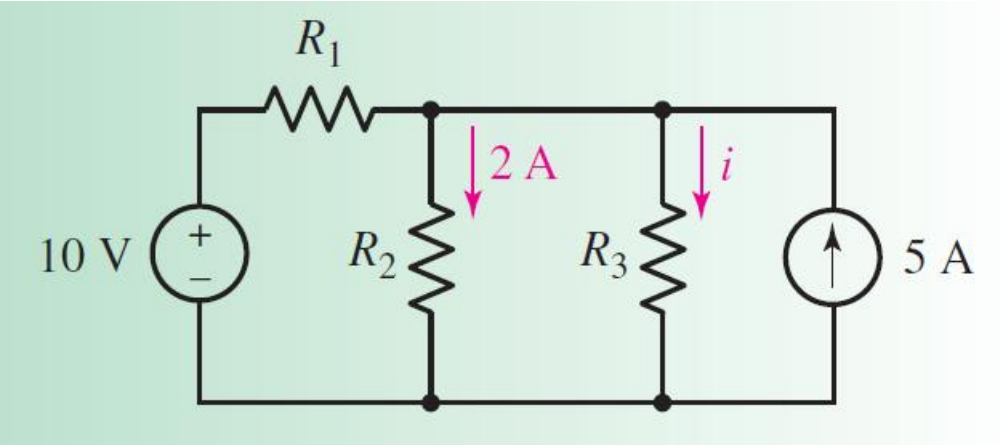

For the circuit in the Fig, compute the current through resistor R3 if it is known that the voltage source supplies a current of 3 A.

Ans: 6 A

Example 2

If i_x = 3 A and the 18 V source delivers 8 A of current, what is the value of R_A?

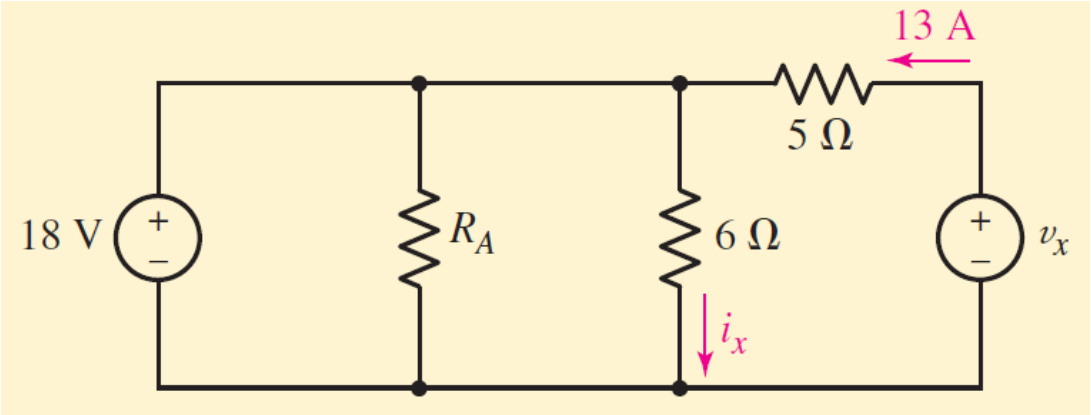

Ans: 1 ohm

Kirchhoff's Voltage Law

- The algebraic sum of the voltages around any closed path is zero

$$\sum_{n=1}^{N} v_n = 0$$

- Convention: sign should be –ve if a –ve side of an element is encountered

Kirchhoff's Voltage Law

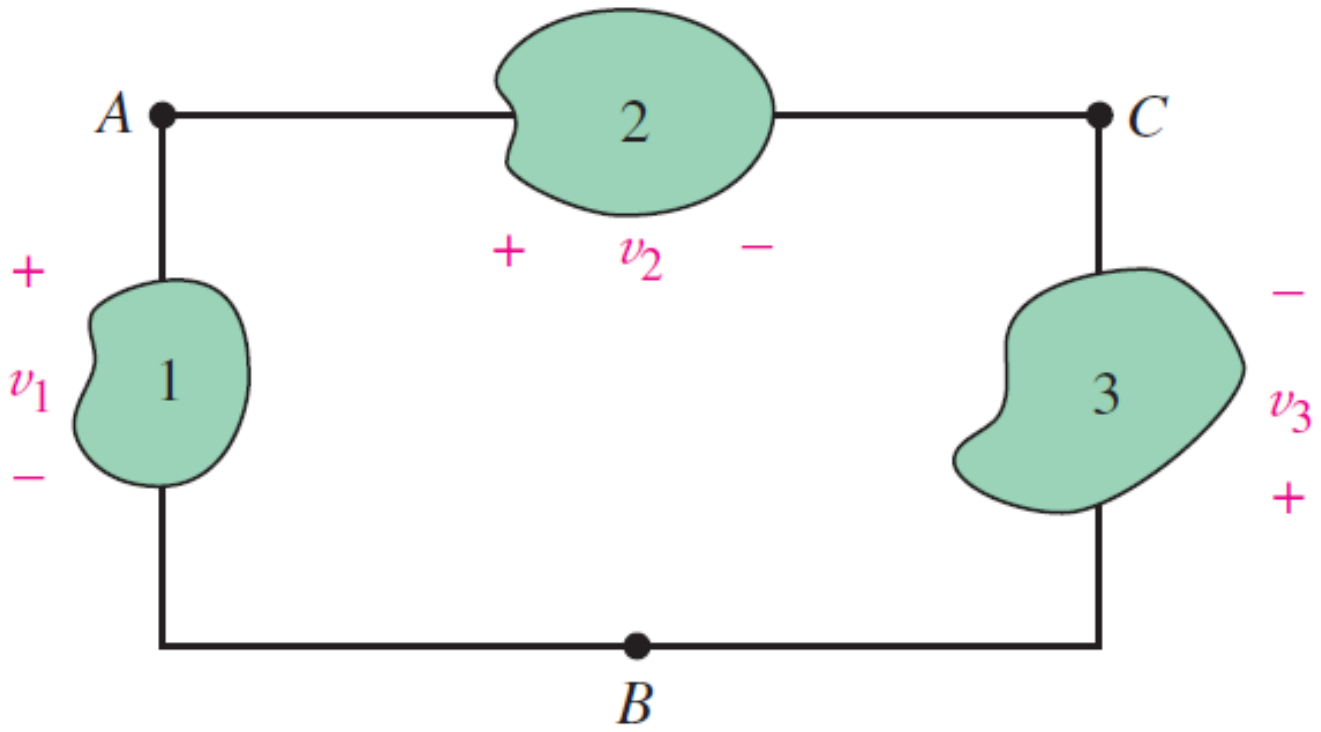

Example 1

In the circuit, find v_x and i_x.

Ans: 12V ,120 mA

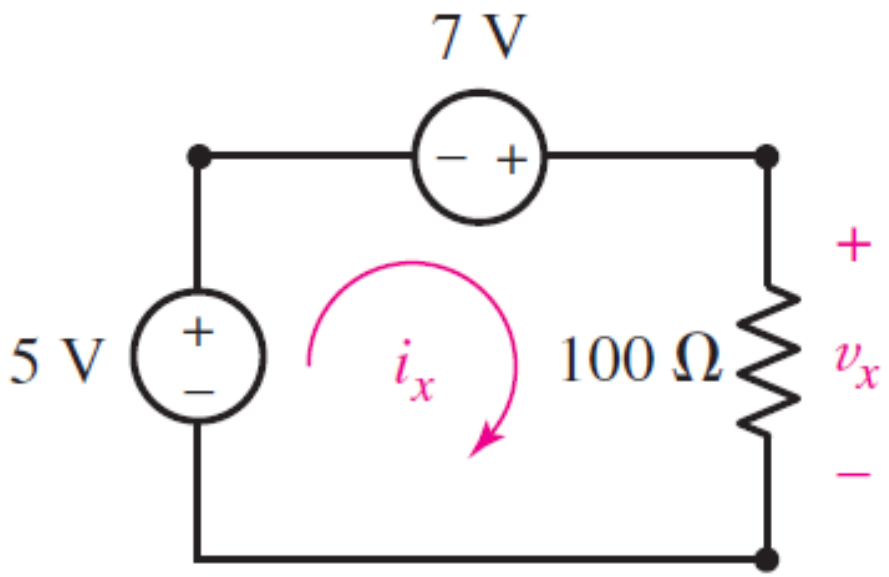

Example 2

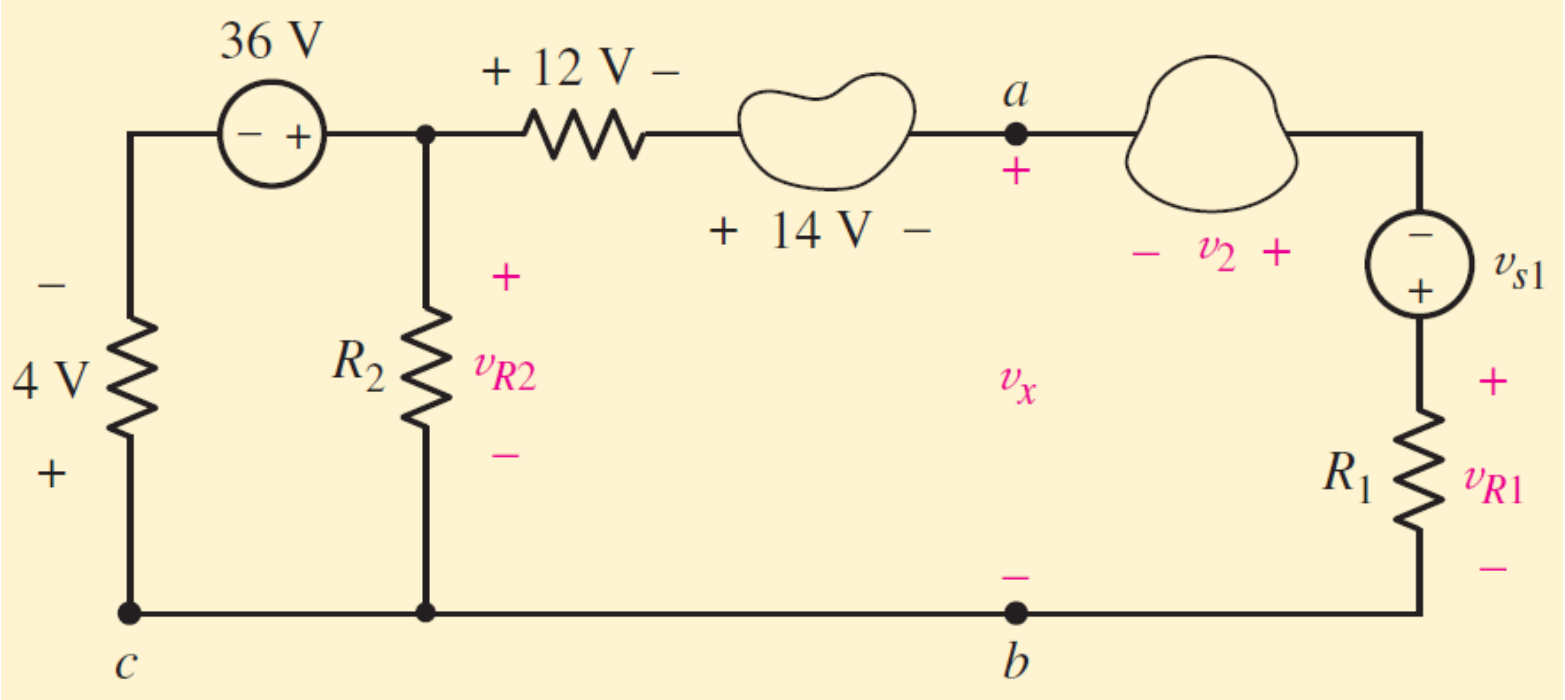

Find v_{R2} (the voltage across R2) and the voltage labeled v_x.

Ans: 32 V, 6 V

Example 4

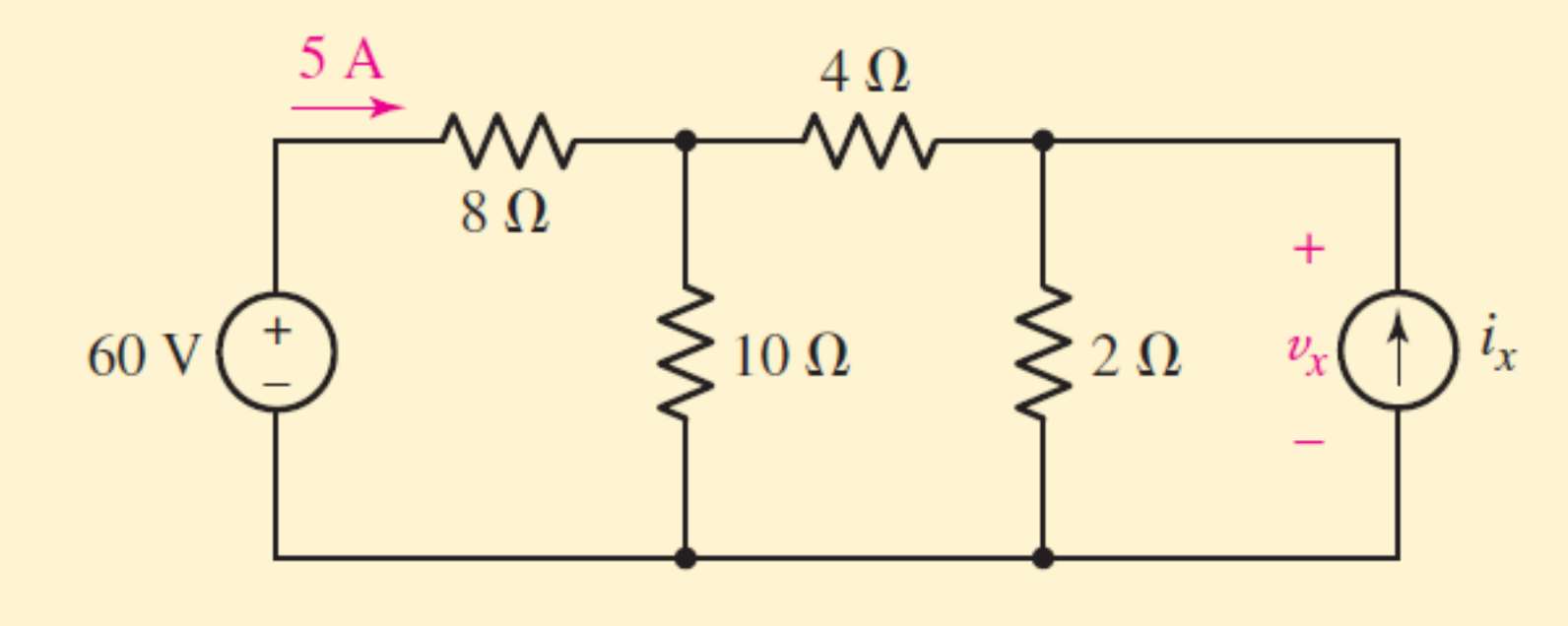

Determine v_x

Ans: 8V

Reference

- Hayt and Kemmerly, Chapter 3

ECE113 – Basic Electronics

Lecture 3: Node and mesh analysis

Dr. Sanat K Biswas, Assistant Professor

Office: B602, Research and Development Block

Email: sanat@iiitd.ac.in

INDRAPRASTHA INSTITUTE *of*
INFORMATION TECHNOLOGY
DELHI

Series and parallel circuits

Series circuit

$$v_1 = (R_1 + R_2 + R_3)i$$

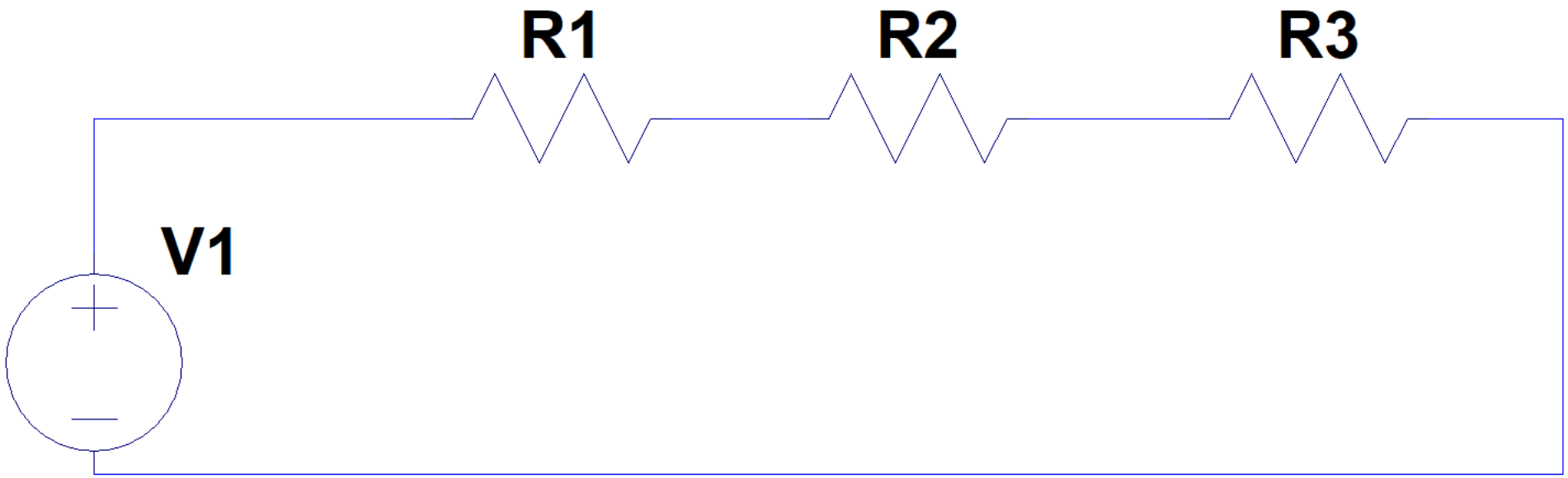

Series and parallel circuits

Parallel circuit

$$i_1 = \frac{v}{R_1} + \frac{v}{R_2} + \frac{v}{R_3}$$

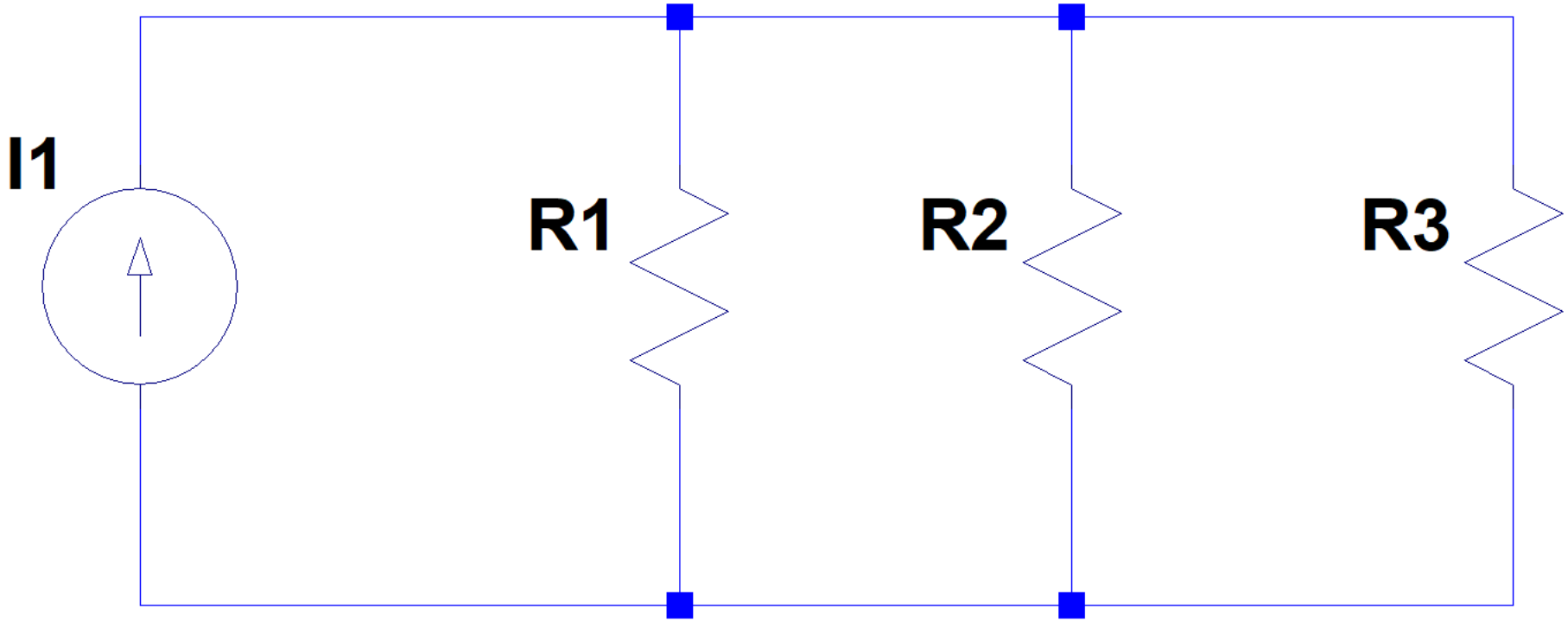

Single loop circuit

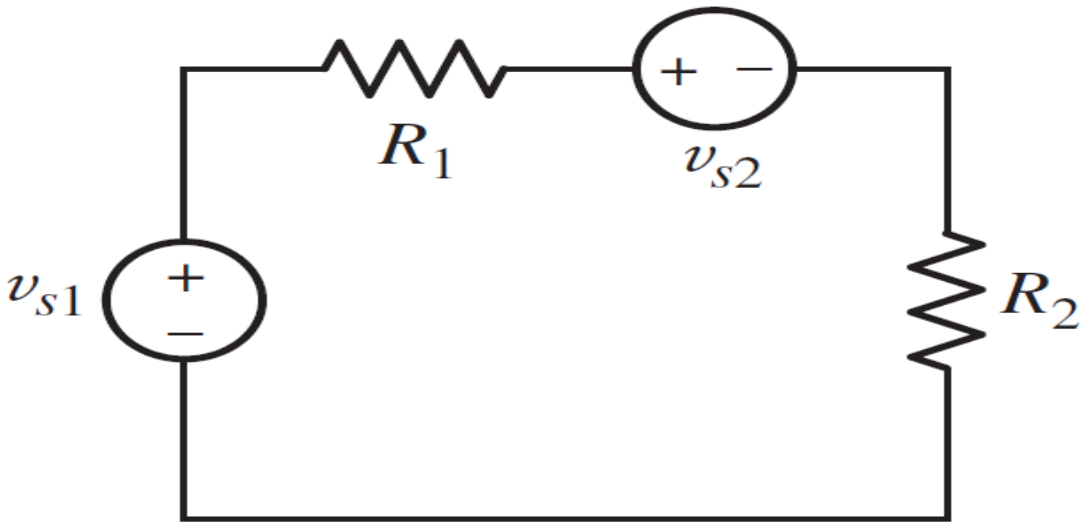

Current through the circuit

$$i = \frac{v_{s1} - v_{s2}}{R_1 + R_2}$$

Single Loop Circuit

EXAMPLE 3.5

Compute the power absorbed in each element for the circuit shown in Fig. 3.13*a*.

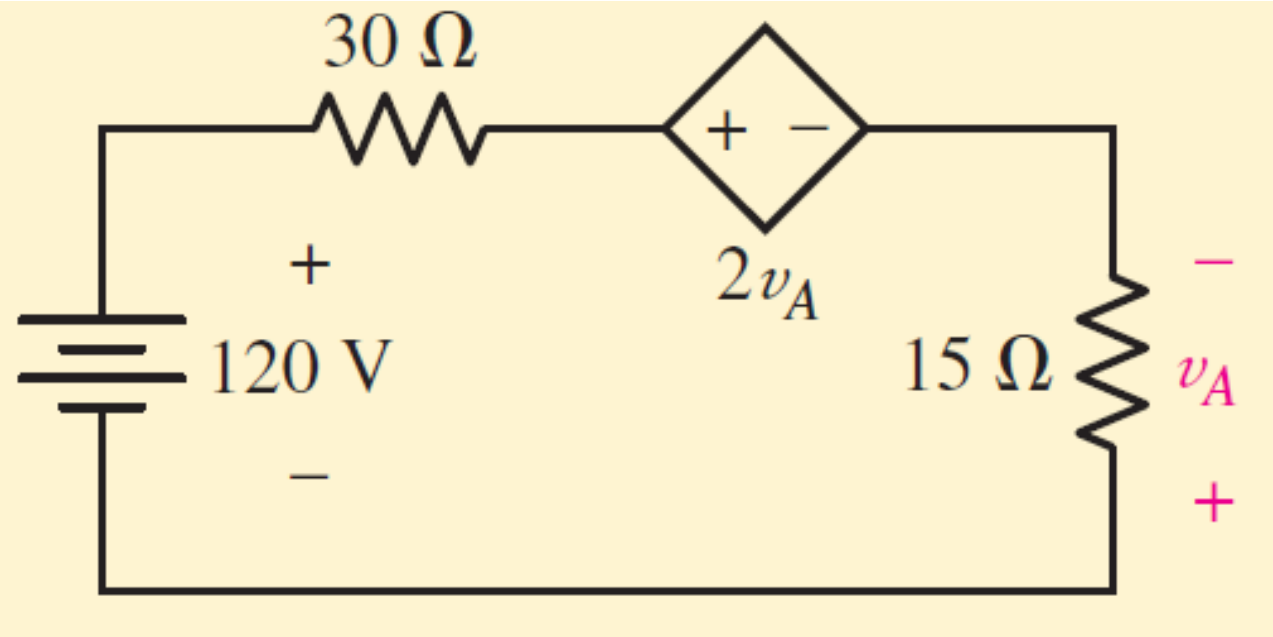

$$
\begin{aligned}
p_{120\text{V}} &= (120)(-8) &&= -960 \text{ W} \\
p_{30\Omega} &= (8)^2(30) &&= 1920 \text{ W} \\
p_{\text{dep}} &= (2v_A)(8) &&= 2[(-15)(8)](8) \\
& &&= -1920 \text{ W} \\
p_{15\Omega} &= (8)^2(15) &&= 960 \text{ W}
\end{aligned}
$$

Single node pair circuit

Text book example 3.6

Find the voltage, current, and power associated with each element in the circuit

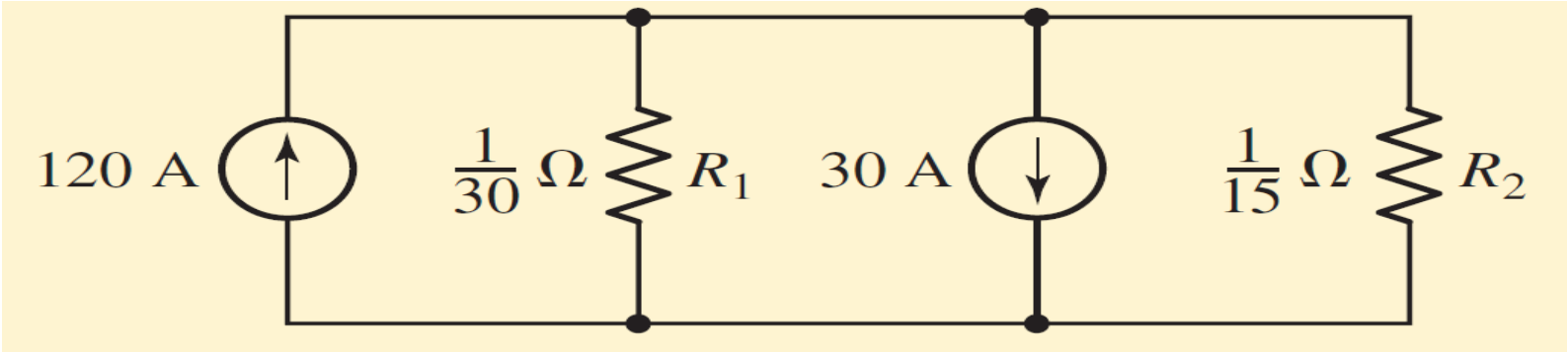

$$p_{R1} = 30(2)^2 = 120 \text{ W} \quad \text{and} \quad p_{R2} = 15(2)^2 = 60 \text{ W}$$

$$p_{120\text{A}} = 120(-2) = -240 \text{ W} \quad \text{and} \quad p_{30\text{A}} = 30(2) = 60 \text{ W}$$

Single node pair circuit

Textbook example 3.7

Determine the value of v and the power supplied by the independent current source

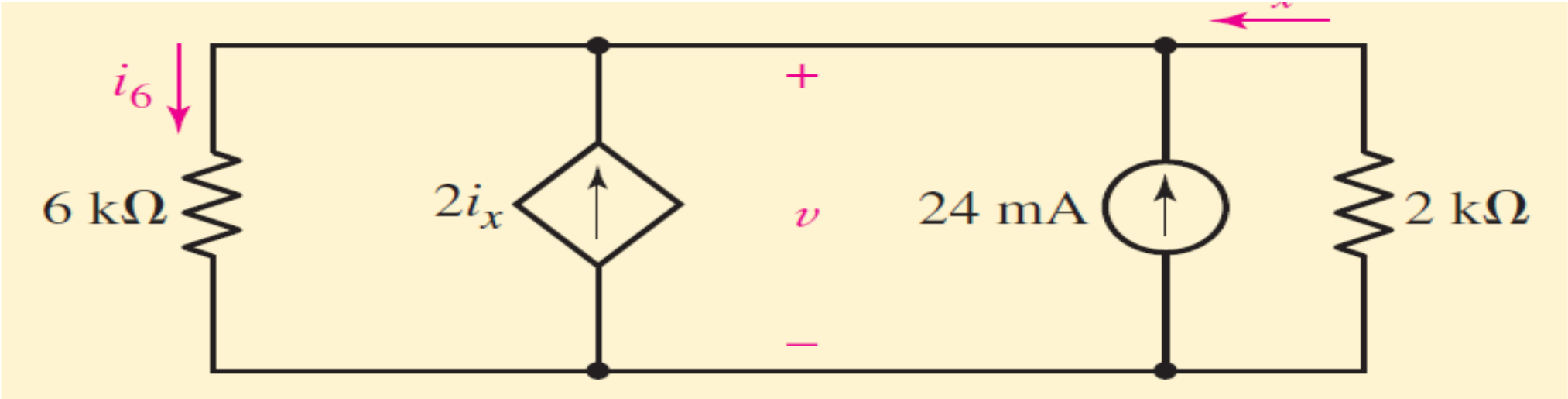

Ans: 14.4 V

Single node pair circuit

Practice 3.8 find i_A, i_B, i_c

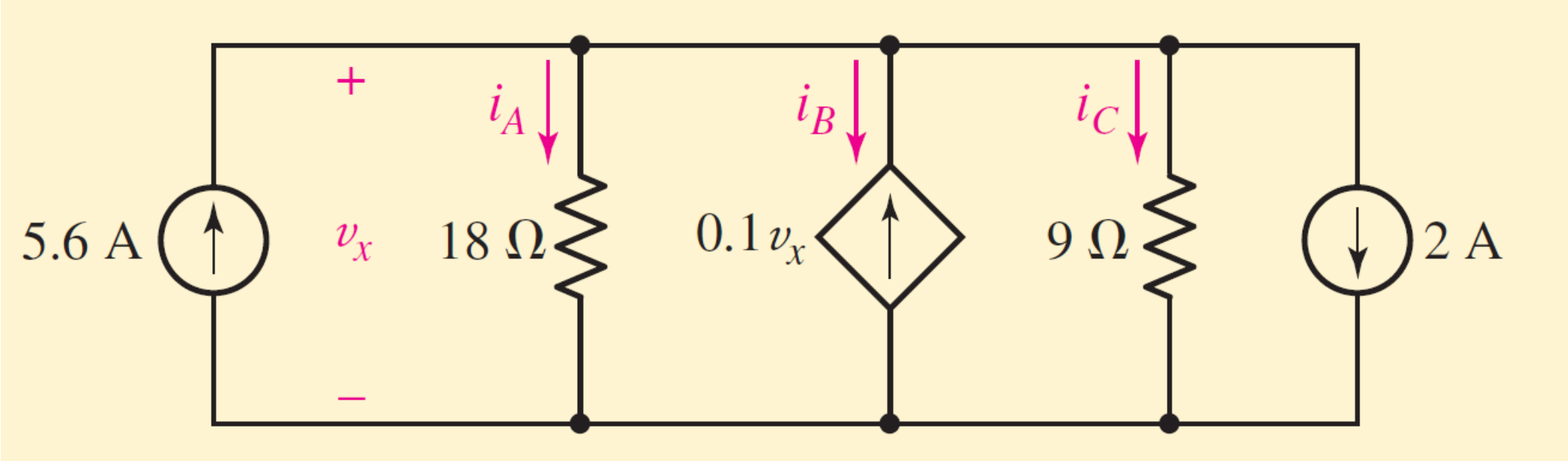

Ans: 3 A; −5.4 A; 6 A

ECE113 – Basic Electronics

Lecture 4: Series and parallel connected sources

Dr. Sanat K Biswas, Assistant Professor

Office: B602, Research and Development Block

Email: sanat@iiitd.ac.in

INDRAPRASTHA INSTITUTE *of*
INFORMATION TECHNOLOGY
DELHI

Series and parallel connected sources

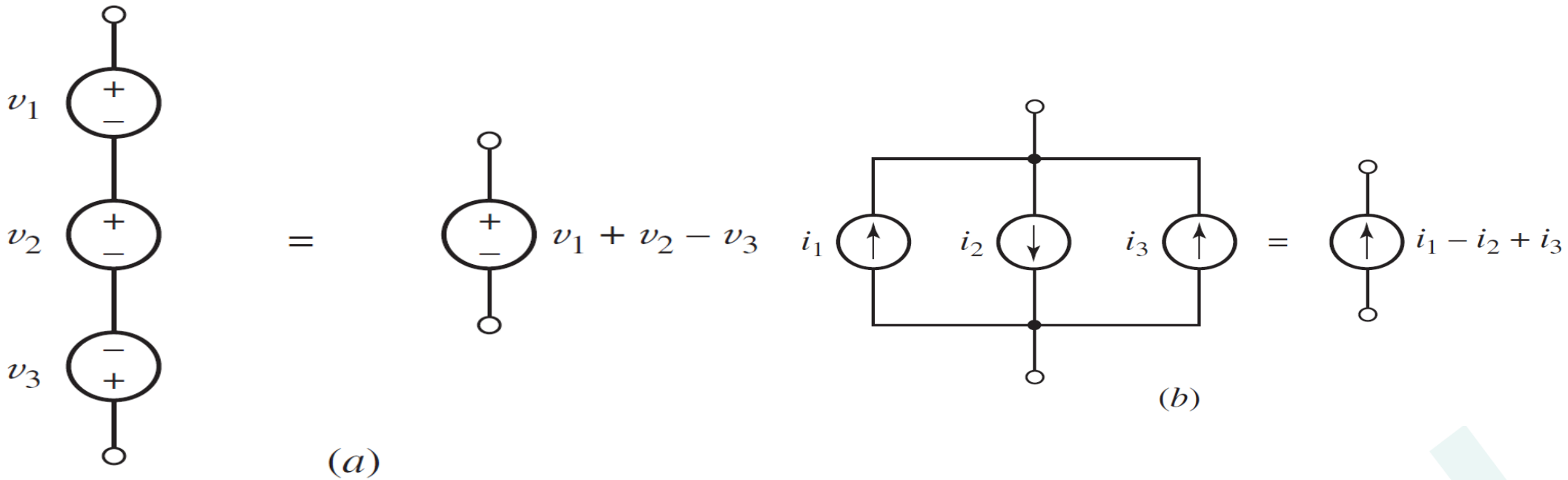

Example 3.8

Determine the current i in the circuit by first combining the sources into a single equivalent voltage source.

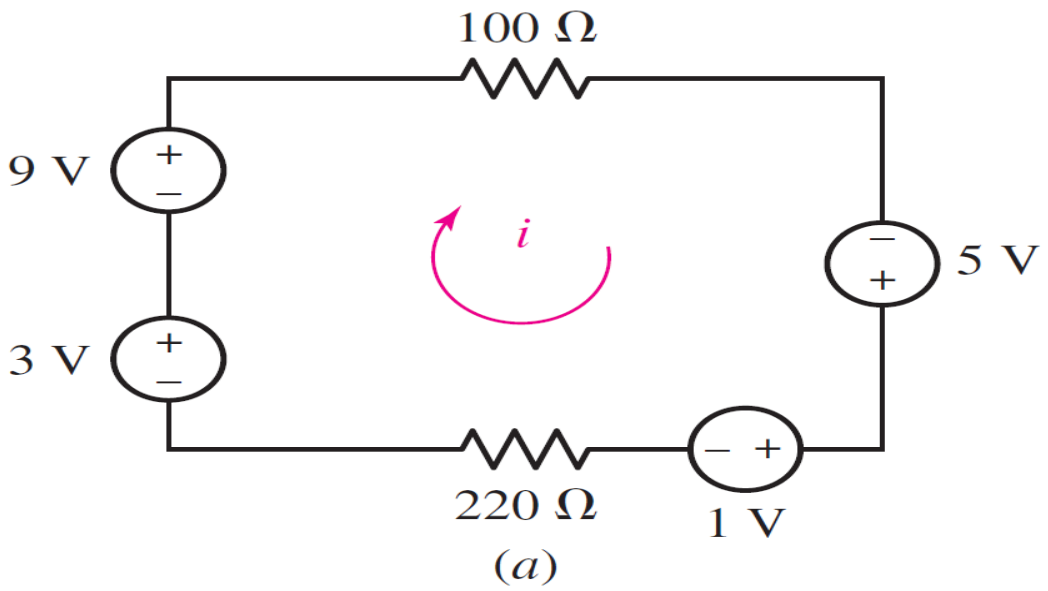

Ans: 50 mA

Example 3.9

Determine the voltage v in the circuit by first combining the sources into a single equivalent current source.

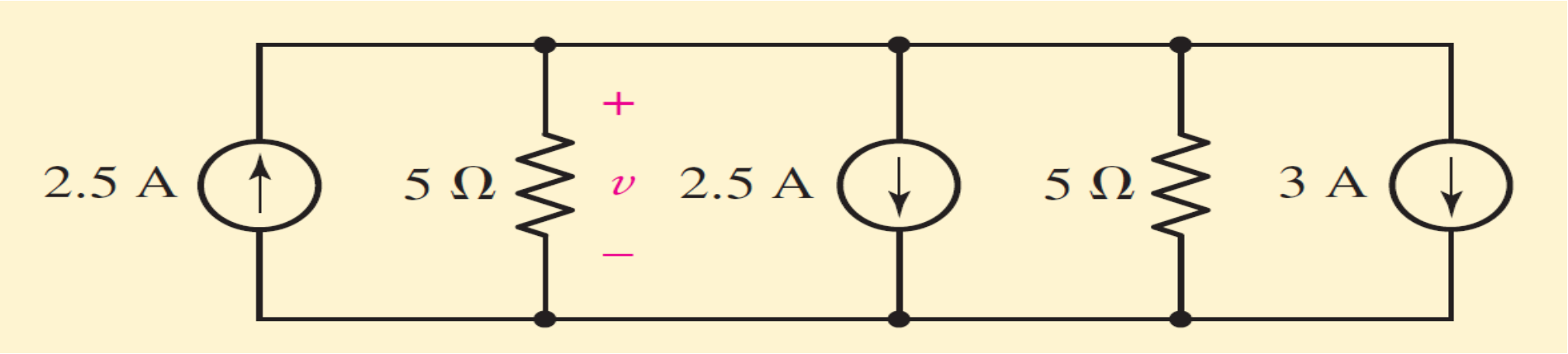

Ans: - 7.5V

Example 3.11

Use resistance and source combinations to determine the current i in the Fig. and the power delivered by the 80 V source.

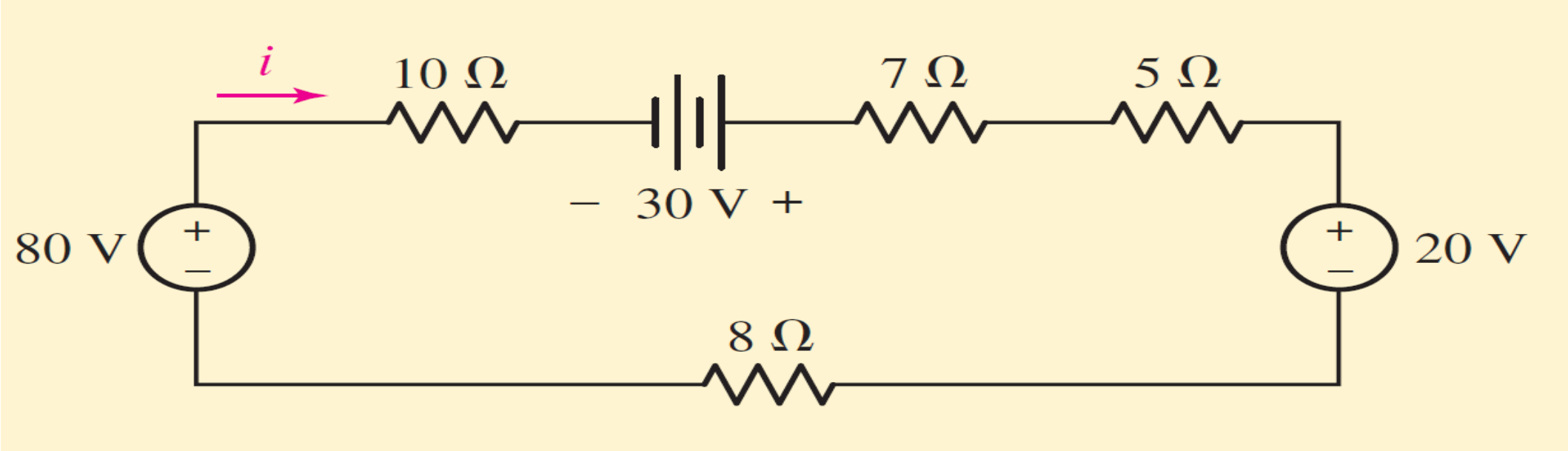

Ans: 3A, 240W

Practice 3.12

Determine i in the circuit

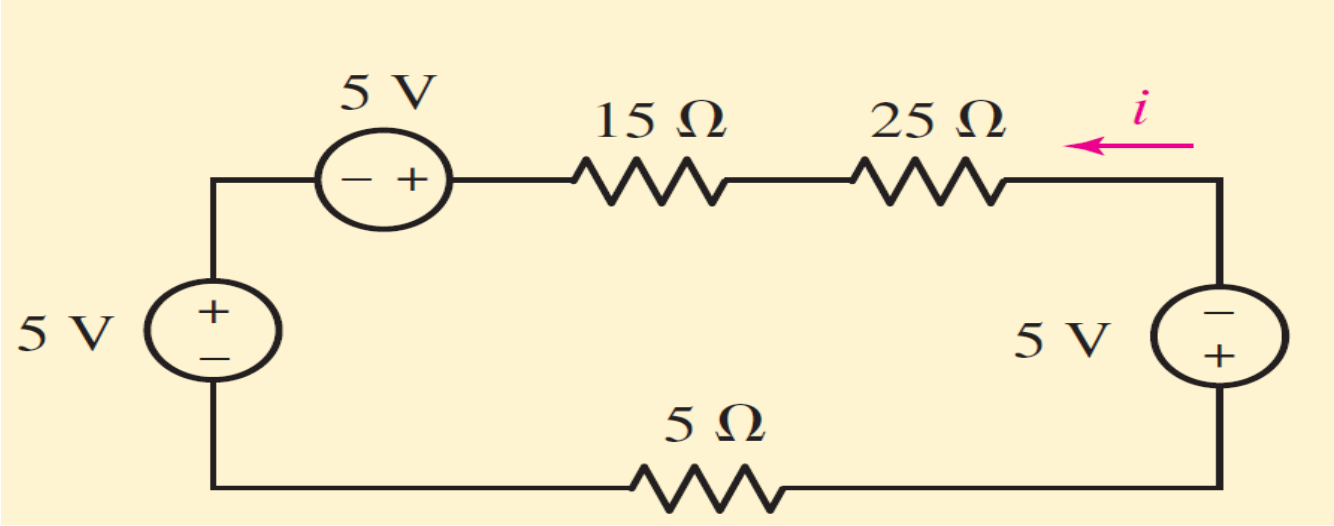

Ans: -333 mA

Practice 3.13

Determine v in the circuit by first combining the three current sources, and then the two 10 Ω resistors.

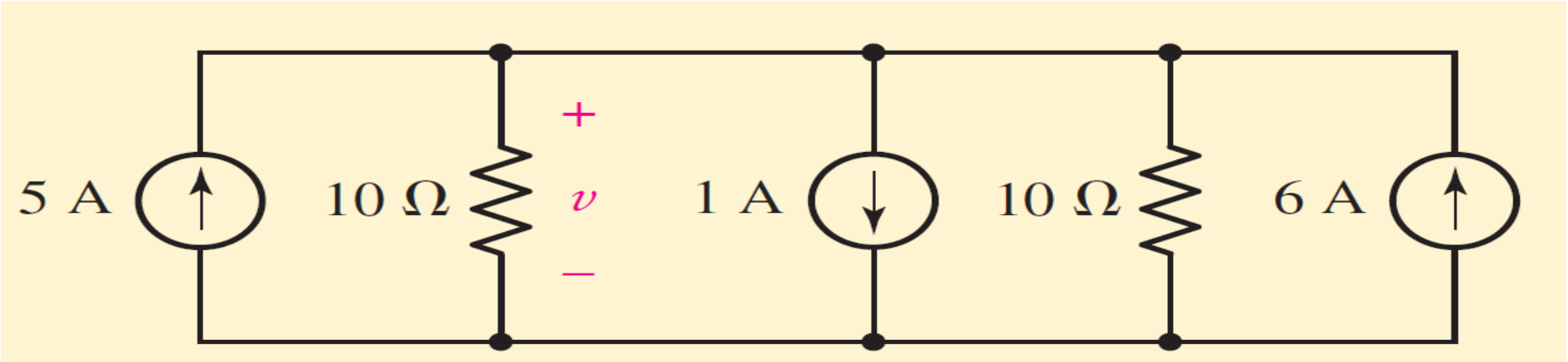

Ans: 50V

Example 3.12

Calculate the power and voltage of the dependent source

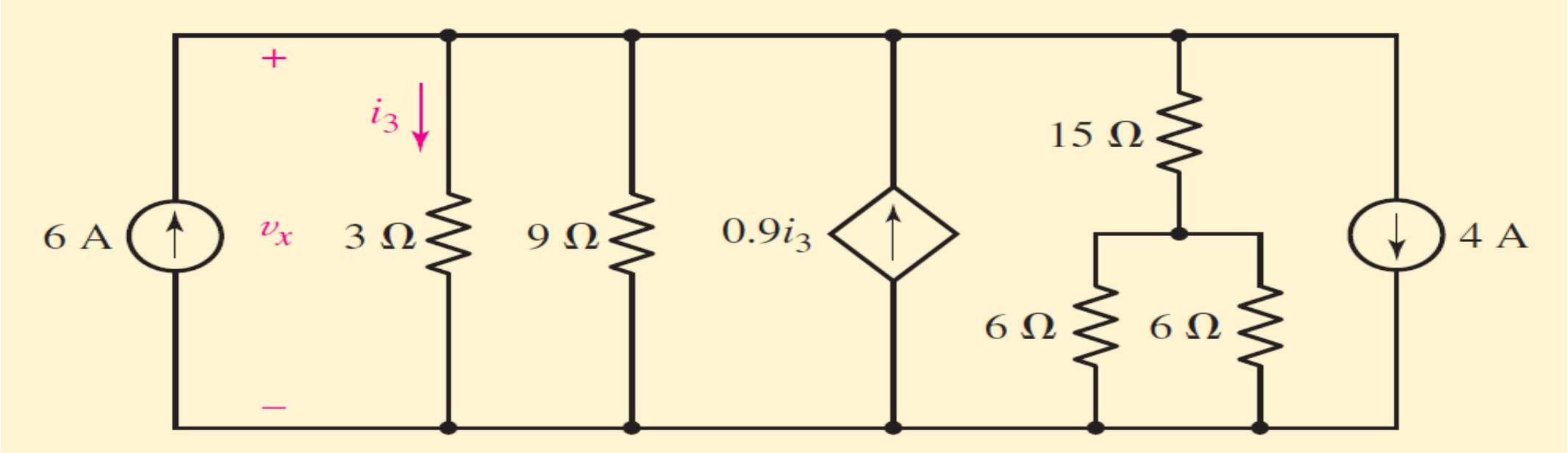

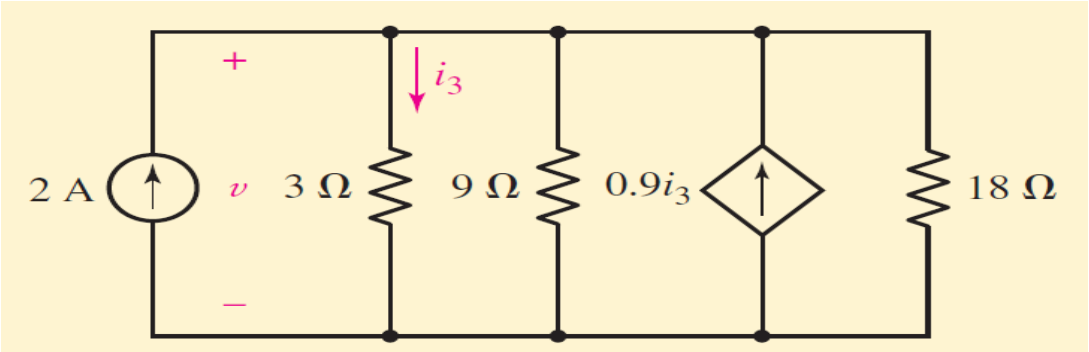

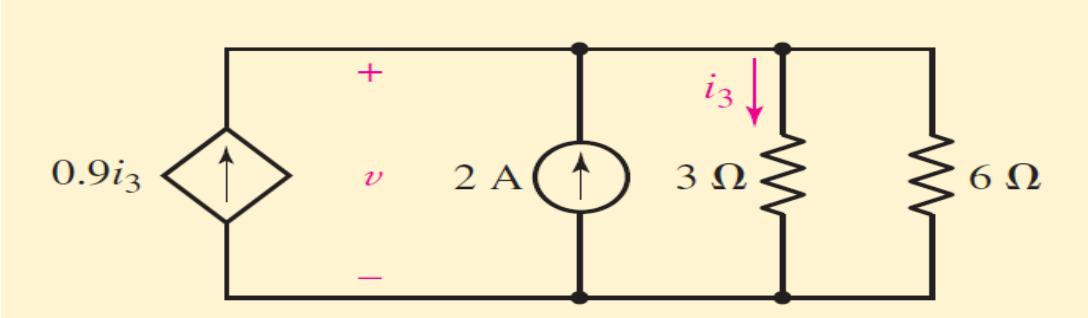

Ans: 30 W

ECE113 – Basic Electronics

Lecture 5: Voltage and current division, Nodal analysis

Dr. Sanat K Biswas, Assistant Professor

Office: B602, Research and Development Block

Email: sanat@iiitd.ac.in

INDRAPRASTHA INSTITUTE *of*
INFORMATION TECHNOLOGY
DELHI

Voltage and current division

Voltage Division

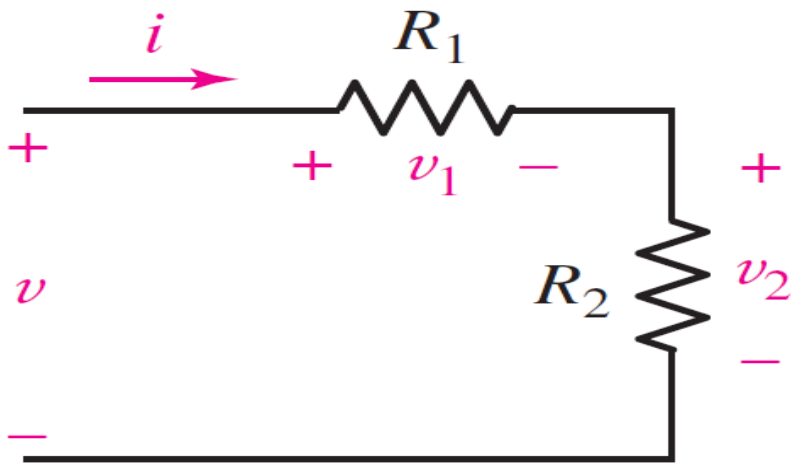

$$v_2 = \frac{R_2}{R_1 + R_2} v$$

$$v_1 = \frac{R_1}{R_1 + R_2} v$$

For N number of resistors in series,
Voltage across kth resistor

$$v_k = \frac{R_k}{R_1 + R_2 + \cdots + R_N} v$$

Voltage and current division

Example 3.13: Determine v_x in the circuit

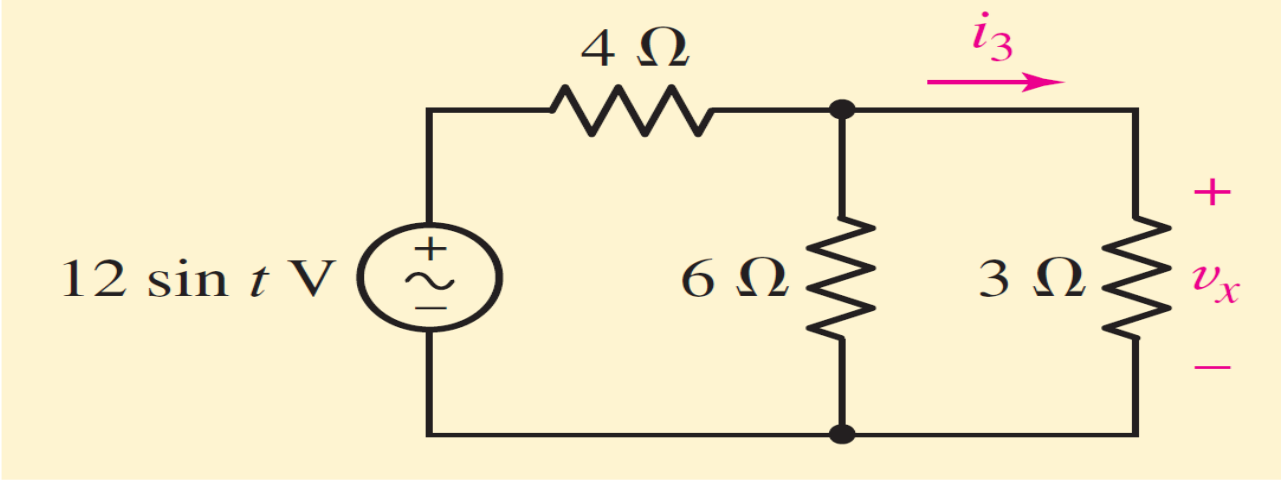

Ans: 4 sin t

Voltage and current division

Current division

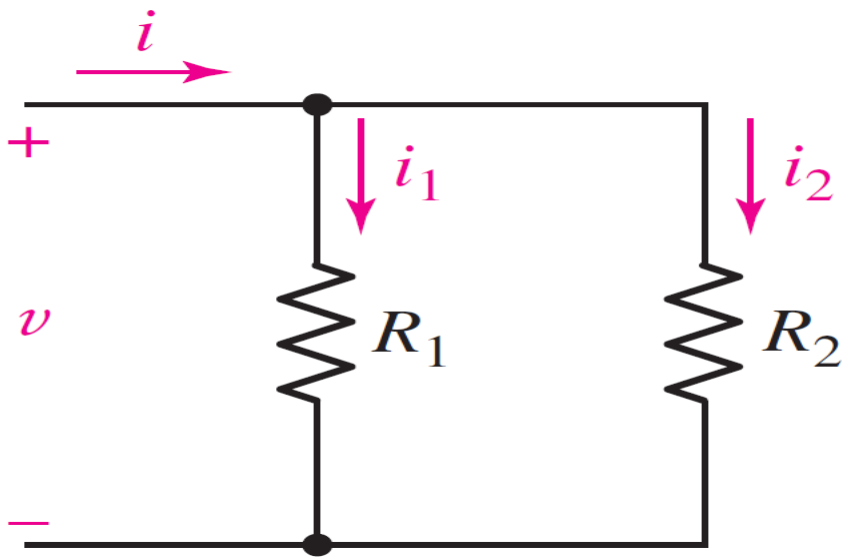

$$i_1 = i\frac{R_2}{R_1 + R_2}$$

$$i_2 = i\frac{R_1}{R_1 + R_2}$$

For N parallel resistors, current through
The kth resistor is

$$i_k = i\frac{\frac{1}{R_k}}{\frac{1}{R_1} + \frac{1}{R_2} + \cdots + \frac{1}{R_N}}$$

Voltage and current division

Example 3.14 (same as previous circuit) find i_3

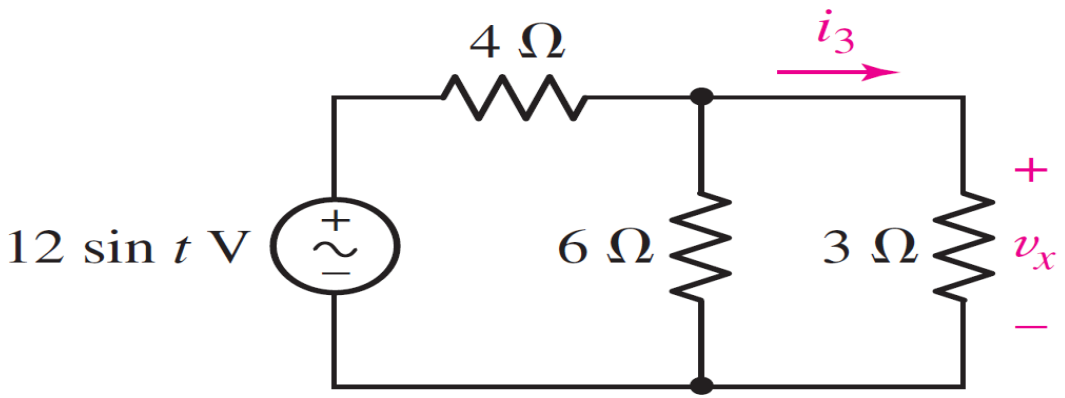

Ans: $\frac{4}{3}$sin t

Nodal Analysis

- Nodal analysis and Mesh analysis— allow to investigate circuits with a consistent, methodical approach
- Nodal analysis is based on KCL
- Mesh analysis is based on KVL (will be discussed in the next lecture)
- A node must be chosen as reference and voltages at other nodes must be assigned with respect to the reference
- Hence, for N number of nodes, N-1 equations can be formed. If number of unknowns are more than N-1, then the problem will be unsolvable

Nodal analysis

Procedure:

1. Choose a node as reference. All voltages shall be measured with respect to this reference (also termed as local ground)
2. Label all the remaining node voltages with respect to the reference
3. Write KCL for all the nodes except the reference
4. Solve equations to find node voltages
5. Calculate branch voltages and currents as asked in questions

Nodal Analysis

Example 4.1: Determine the current flowing left to right through the 15 ohm resistor of Fig

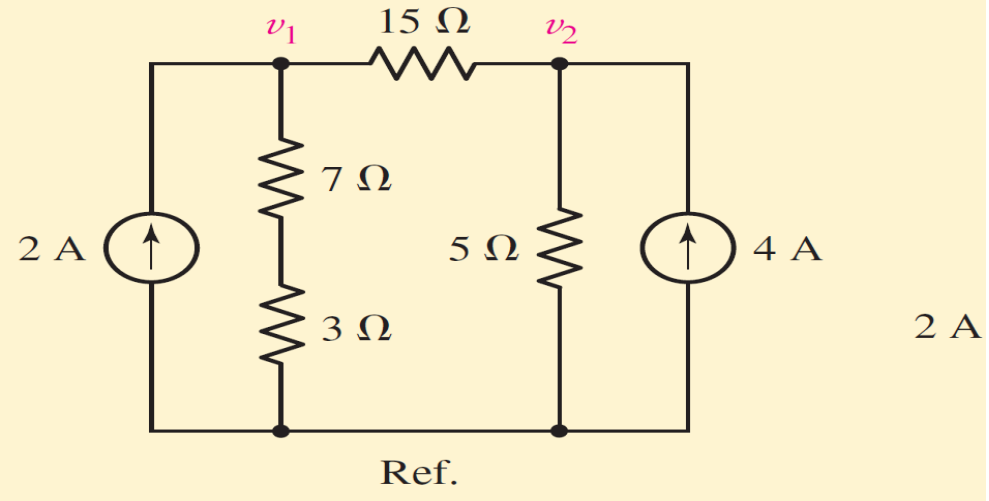

Ans: 0

Nodal Analysis

Practice Problem 4.1: determine the nodal voltages v1 and v2.

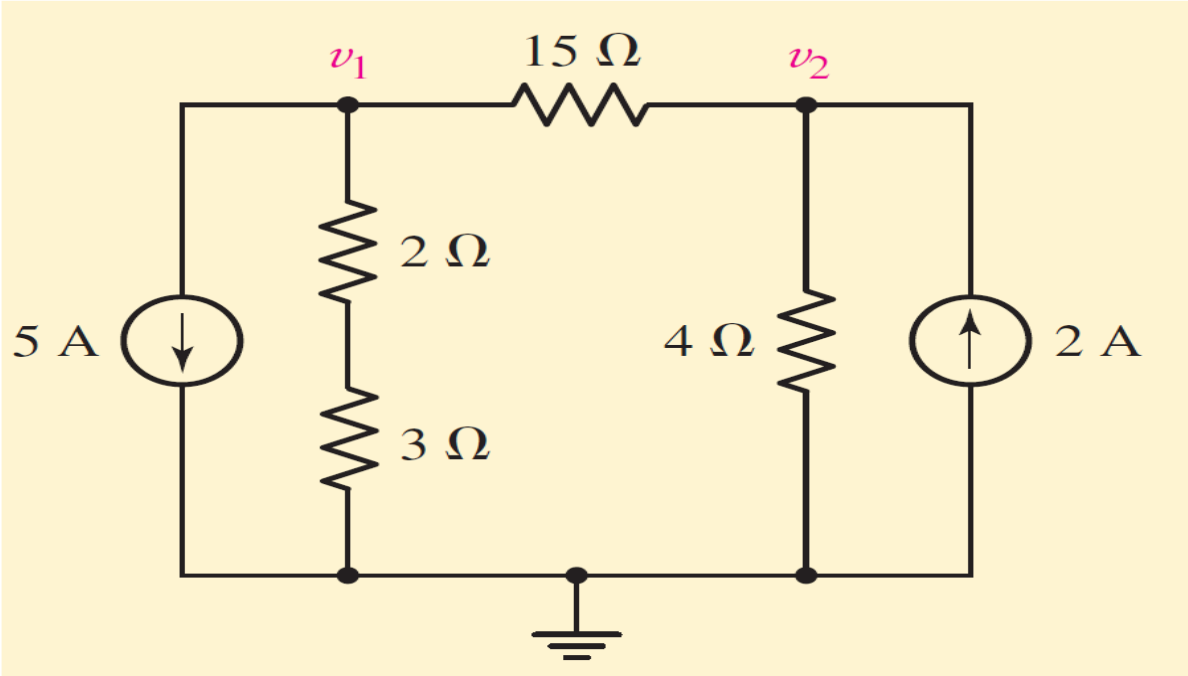

Ans: v1 = −145/8 V, v2 = 5/2 V.

Nodal Analysis

Example 4.2: Determine the nodal voltages for the circuit

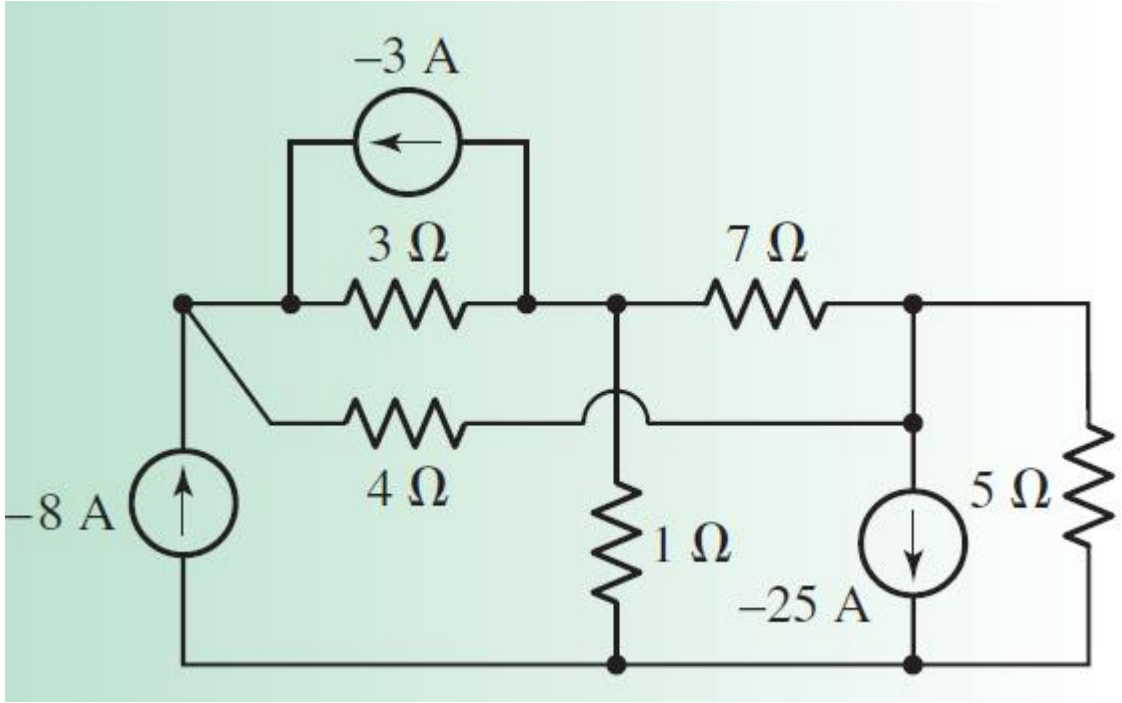

Nodal Analysis

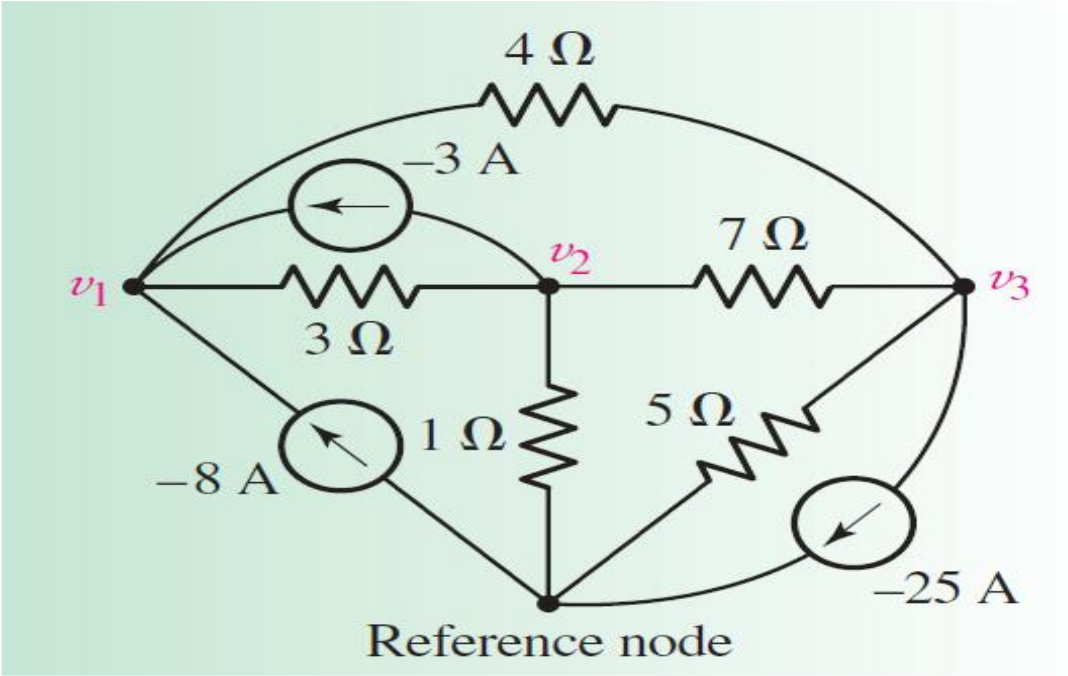

Ans: 5.412 V, 7.736 V, 46.32 V

ECE113- Basic Electronics

Lecture 6: Super-node, Mesh Analysis, Super-mesh

Dr. Sanat K Biswas, Assistant Professor

Office: B602, Research and Development Block

Email: sanat@iiitd.ac.in

INDRAPRASTHA INSTITUTE *of*
INFORMATION TECHNOLOGY
DELHI

Super-node

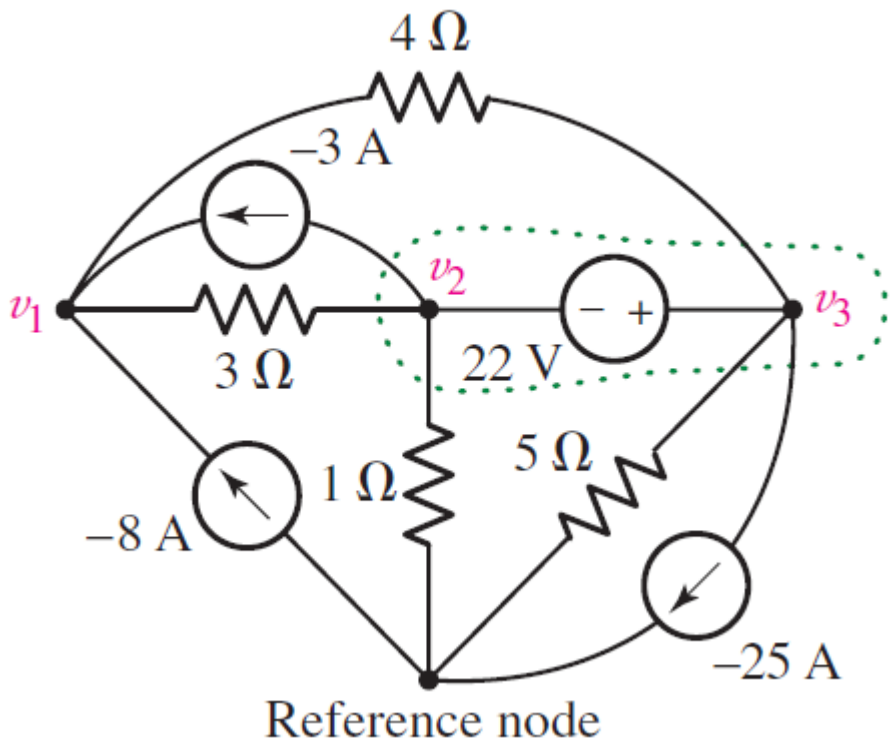

- Used to handle the Independent Voltage sources in Nodal analysis
- In presence of a voltage source, it is difficult to form KCL equations
- The easier method is to treat node 2, node 3, and the voltage source together as a super-node and apply KCL
- This is okay because if the total current leaving node 2 is zero and the total current leaving node 3 is zero and no extra current is supplied by the voltage source. Then the total current leaving the combination of the two nodes is zero.

Example 4.5

Determine the value of the unknown node voltage v1

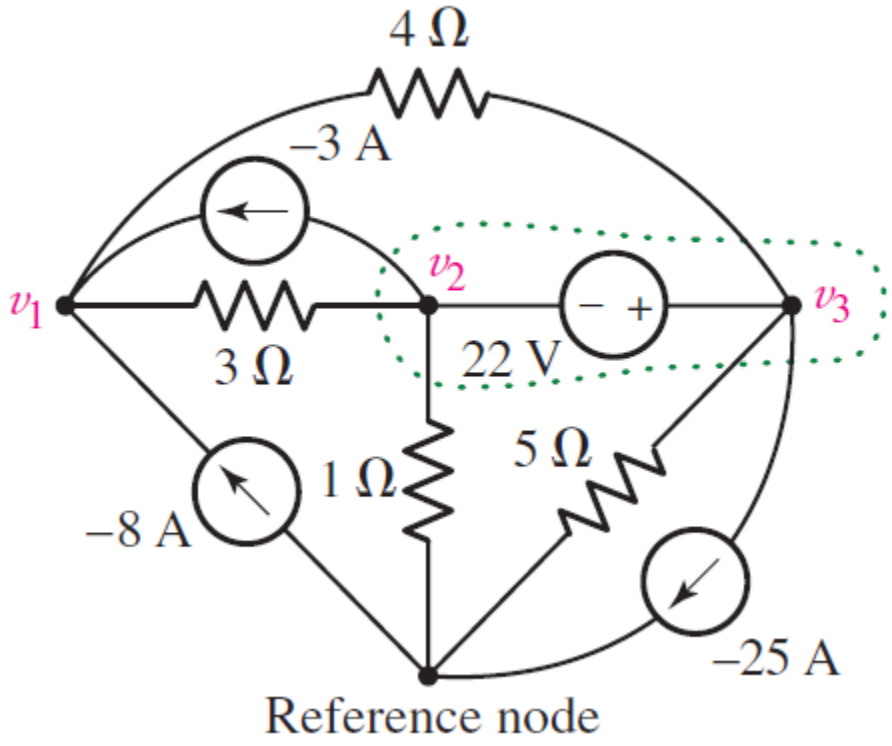

Ans: 1.071 V

Practice 4.4

For the circuit of Fig., compute the voltage across each current source.

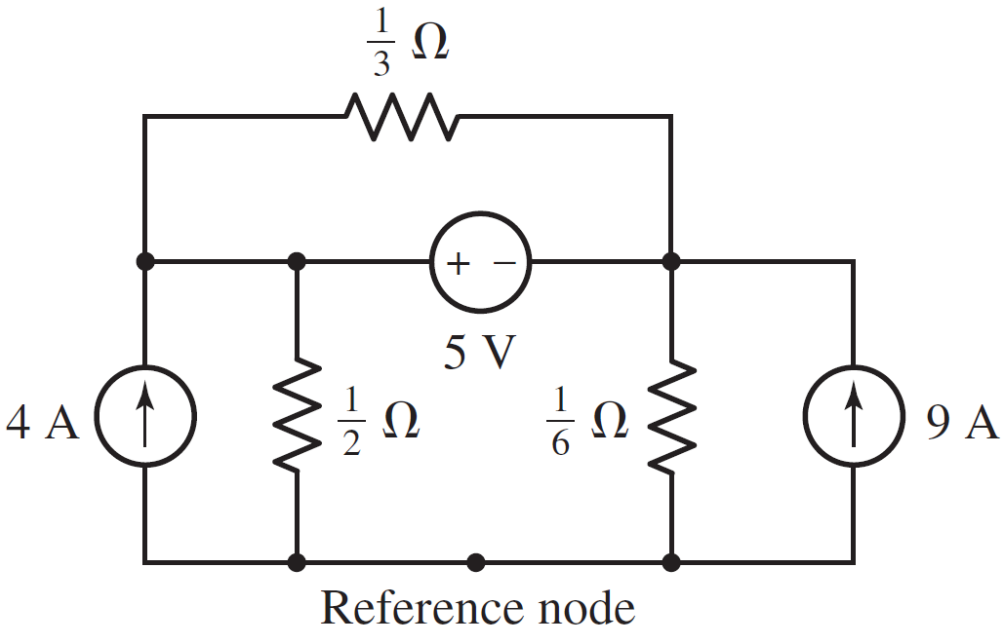

Ans: 5.375 V, 375 mV

Mesh analysis

- Mesh is a loop that does not contain any loop inside
- Approach based on KVL
- What KCL is to node analysis, KVL is to Mesh analysis
- Applicable to planar circuit
- If it is possible to draw the diagram of a circuit on a plane surface in such a way that no branch passes over or under any other branch, then that circuit is said to be a planar circuit.
- If our circuit contains M meshes, then we expect to have M mesh currents and therefore will be required to write M independent equations

Mesh analysis

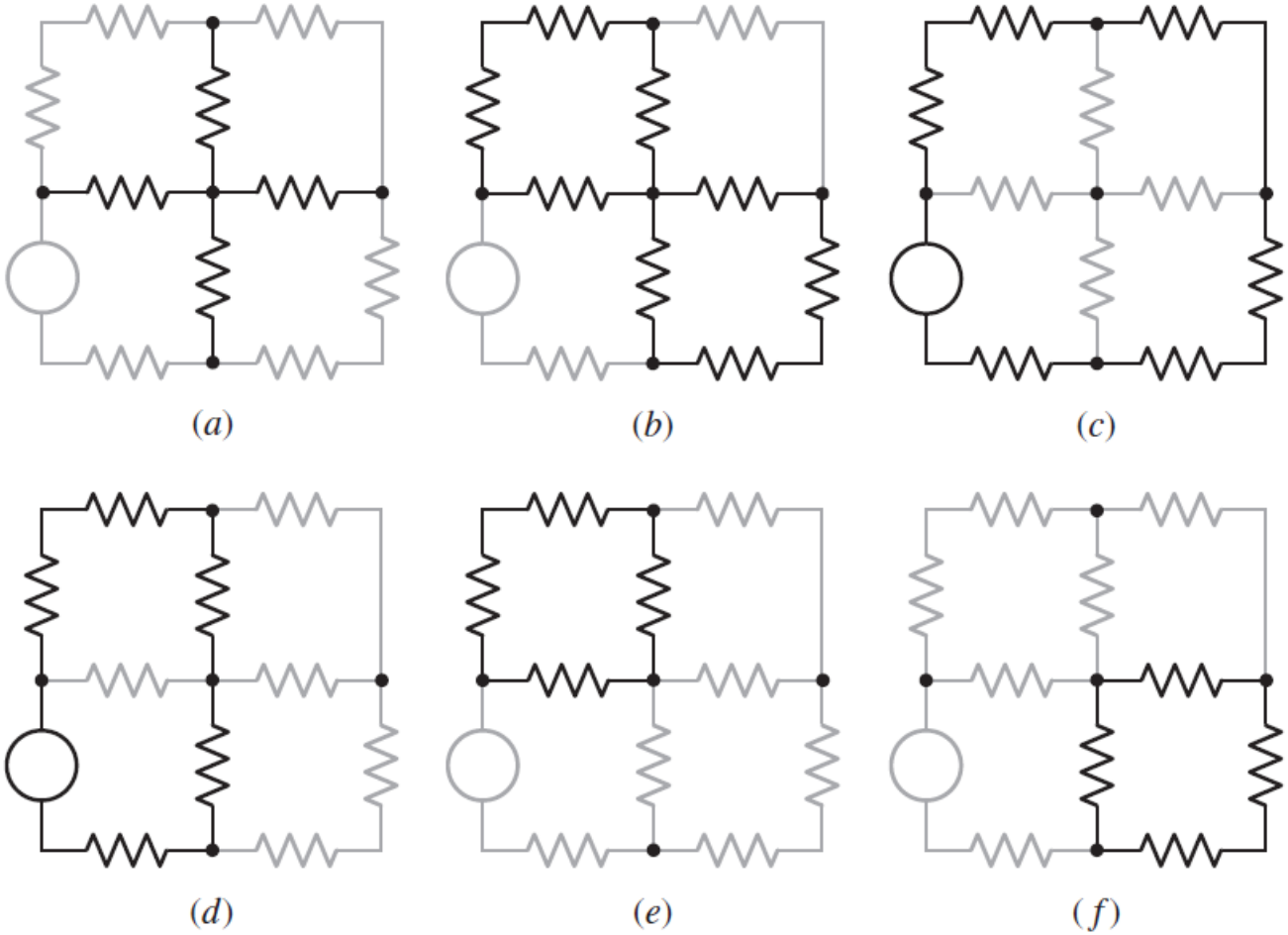

Mesh analysis

Procedure

1. Determine if the circuit is a planar circuit. If not, perform nodal analysis instead.
2. Count the number of meshes (M). Redraw the circuit if necessary.
3. Label each of the M mesh currents. Generally, defining all mesh currents to flow clockwise results in a simpler analysis.
4. Write a KVL equation around each mesh. If a current source lies on the periphery of a mesh, no KVL equation is needed and the mesh current is determined by inspection.
5. Express any additional unknowns such as voltages or currents other than mesh currents in terms of appropriate mesh currents. This situation can occur if current sources or dependent sources appear in our circuit.
6. Organize the equations. Group terms according to mesh currents.
7. Solve the system of equations for the mesh currents (there will be M of them).

Example 4.7

Determine the power supplied by the 2 V source

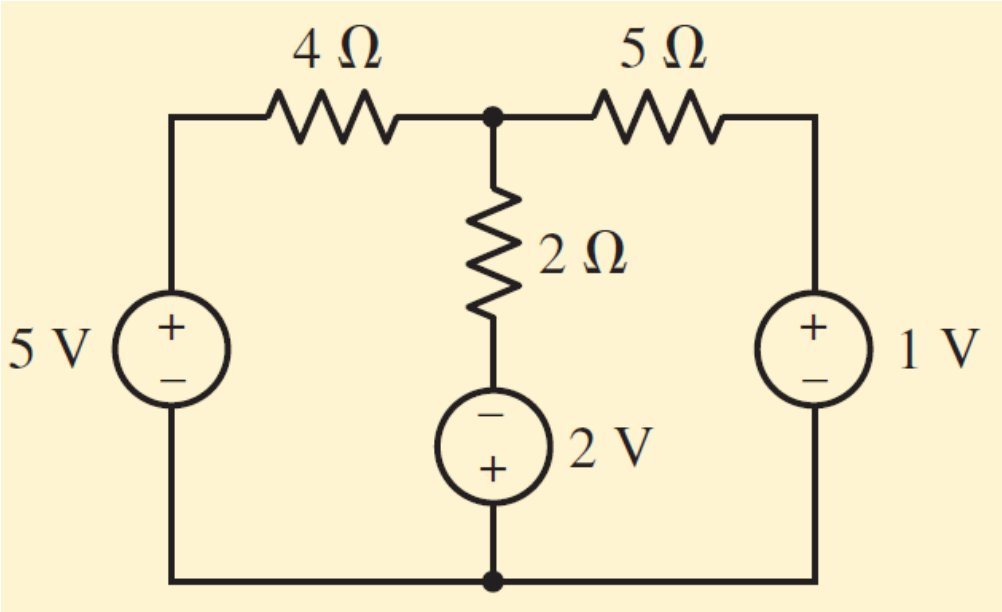

Ans: 2.474 W.

Example 4.8

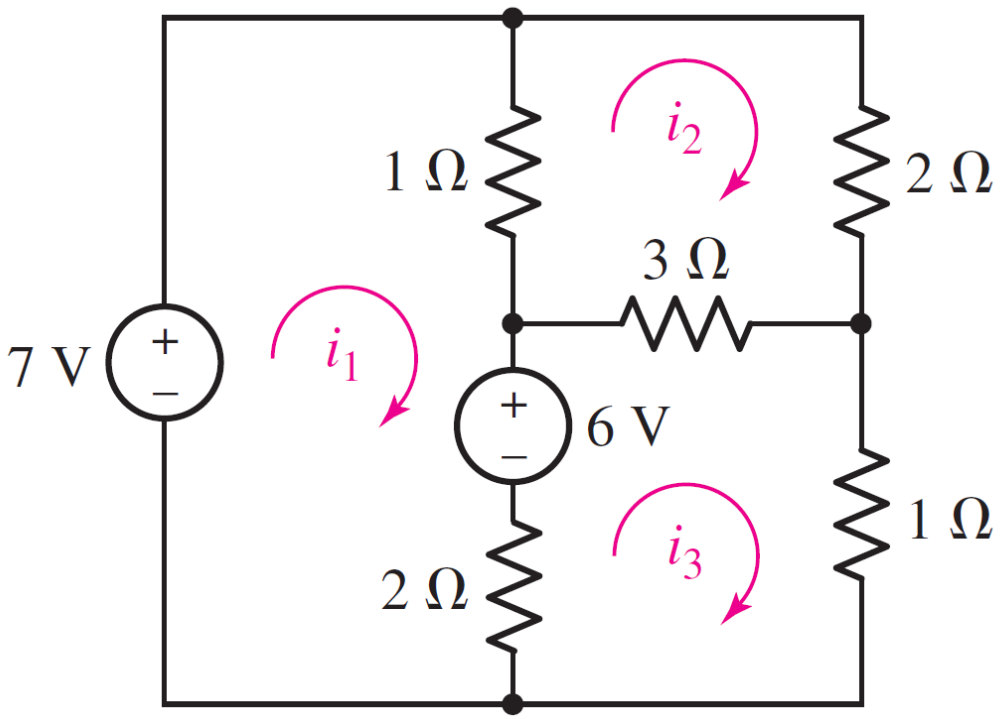

Use mesh analysis to determine the three mesh currents in the circuit

Ans: $i_1 = 3$ A, $i_2 = 2$ A, and $i_3 = 3$ A

Supermesh

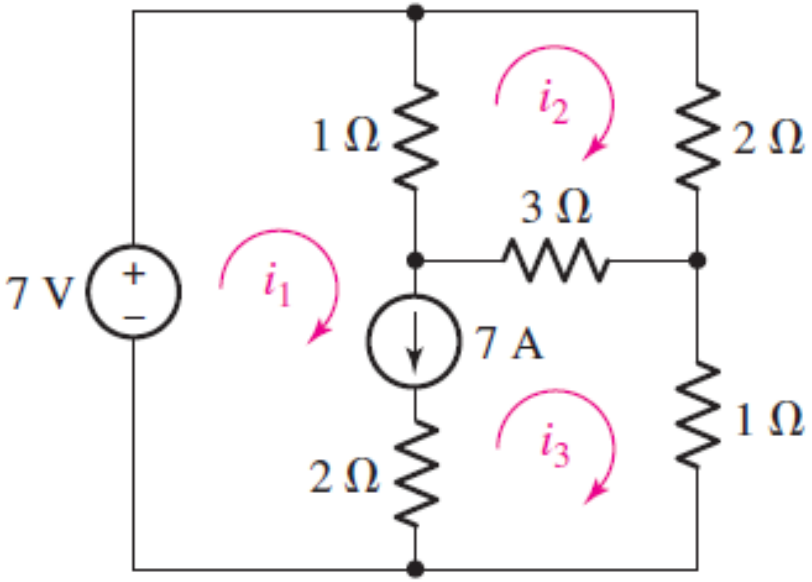

- Used to handle the Independent Current sources in Mesh analysis
- “Super-mesh” is created from two meshes that have a current source as a common element; the current source is in the interior of the super-mesh.
- The number of meshes reduces by 1 for each current source present

Example 4.11

Determine the three mesh currents in Fig.

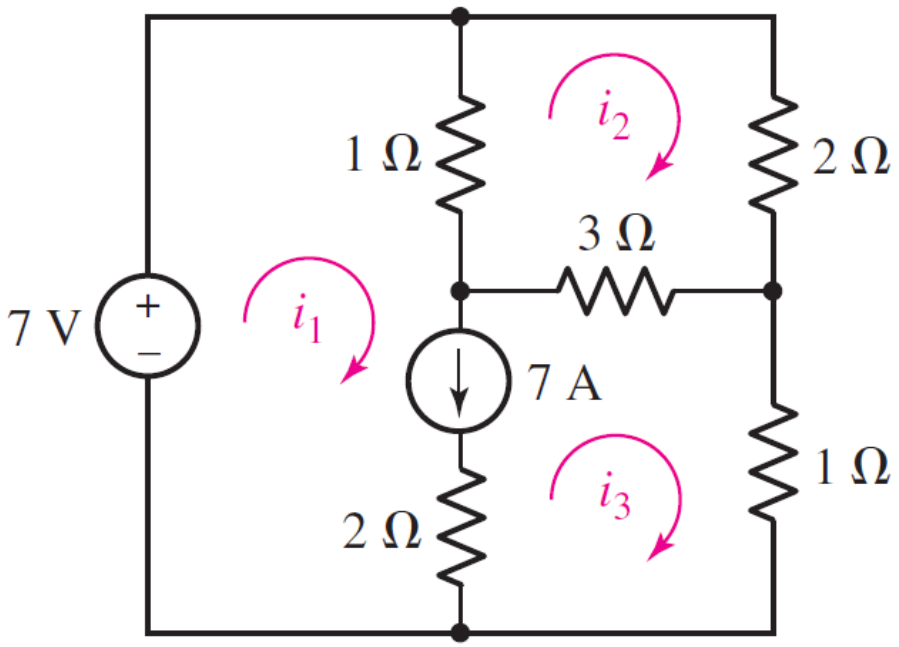

Ans: i1 = 9 A, i2 = 2.5 A, and i3 = 2 A

Nodal analysis for dependent source

Ex. 4.4

Determine the power supplied by the dependent source

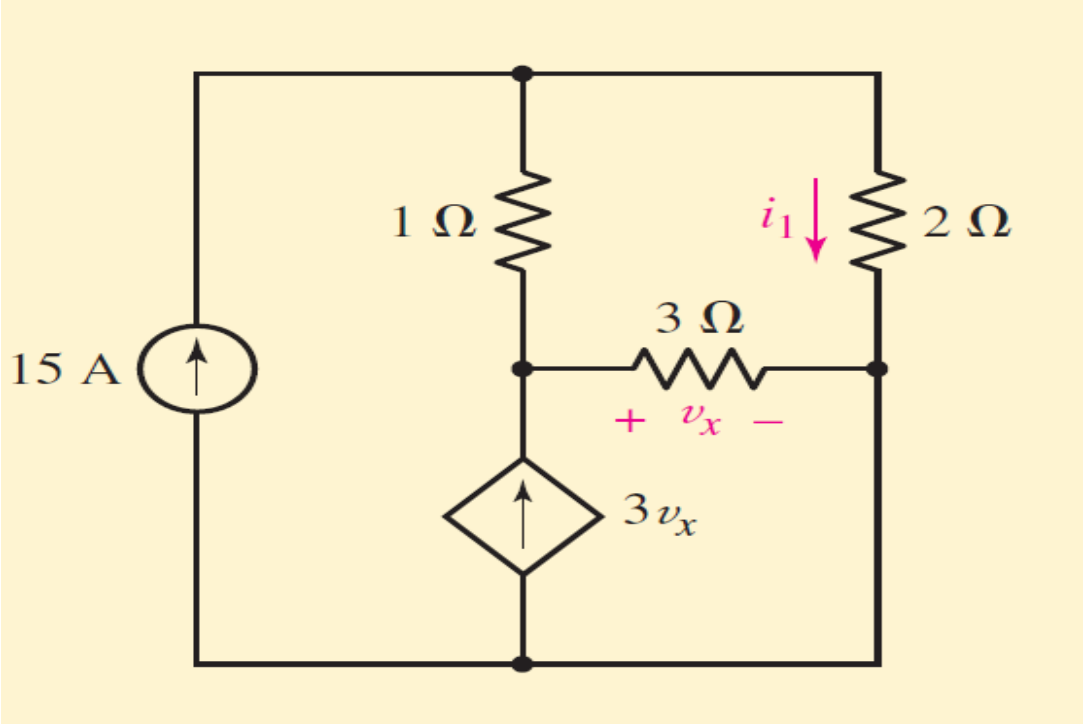

Ans: 55.1 W

Mesh analysis with dependent source

Ex 4.9

Determine the current i1 in the circuit

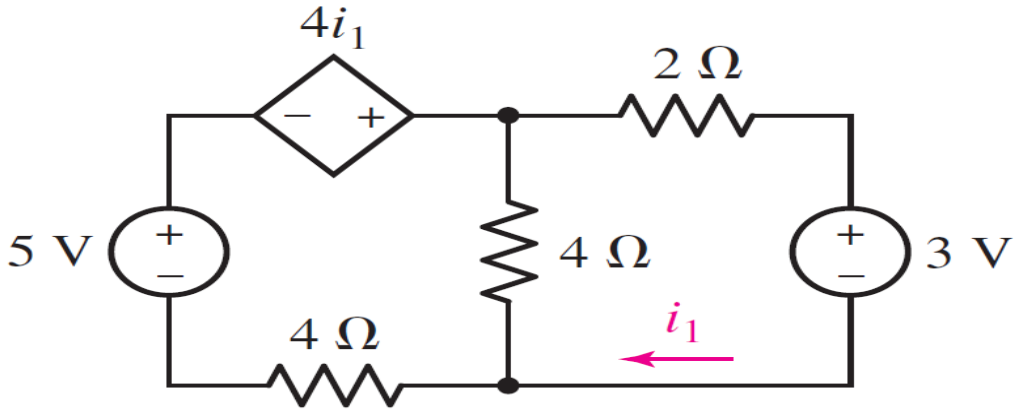

Ans: −250 mA

What method should be used?

- If node voltages are required, nodal analysis is preferred
- If mesh current is required, mesh analysis may be used
- For circuits with dependent source, apply a method according to the controlling quantity

ECE113- Basic Electronics

Lecture 7: Superposition principle

Dr. Sanat K Biswas, Assistant Professor

Office: B602, Research and Development Block

Email: sanat@iiitd.ac.in

INDRAPRASTHA INSTITUTE *of*
INFORMATION TECHNOLOGY
DELHI

Linearity and superposition

A function f is called linear if

- $f(x+y) = f(x) + f(y)$, additive
- $f(\alpha x) = \alpha f(x)$, homogenious

These two properties are called the superposition principle

Superposition theorem for electrical circuits

- Linear elements are passive elements that have a linear voltage-current relationships
- We now define a Linear circuit as a circuit composed entirely of independent sources, linear dependent sources, and linear elements
- In any linear resistive network, the voltage across or the current through any resistor or source may be calculated by adding algebraically all the individual voltages or currents caused by the separate independent sources acting alone, with all other independent voltage sources replaced by short circuits and all other independent current sources replaced by open circuits.

Superposition theorem for electrical circuits

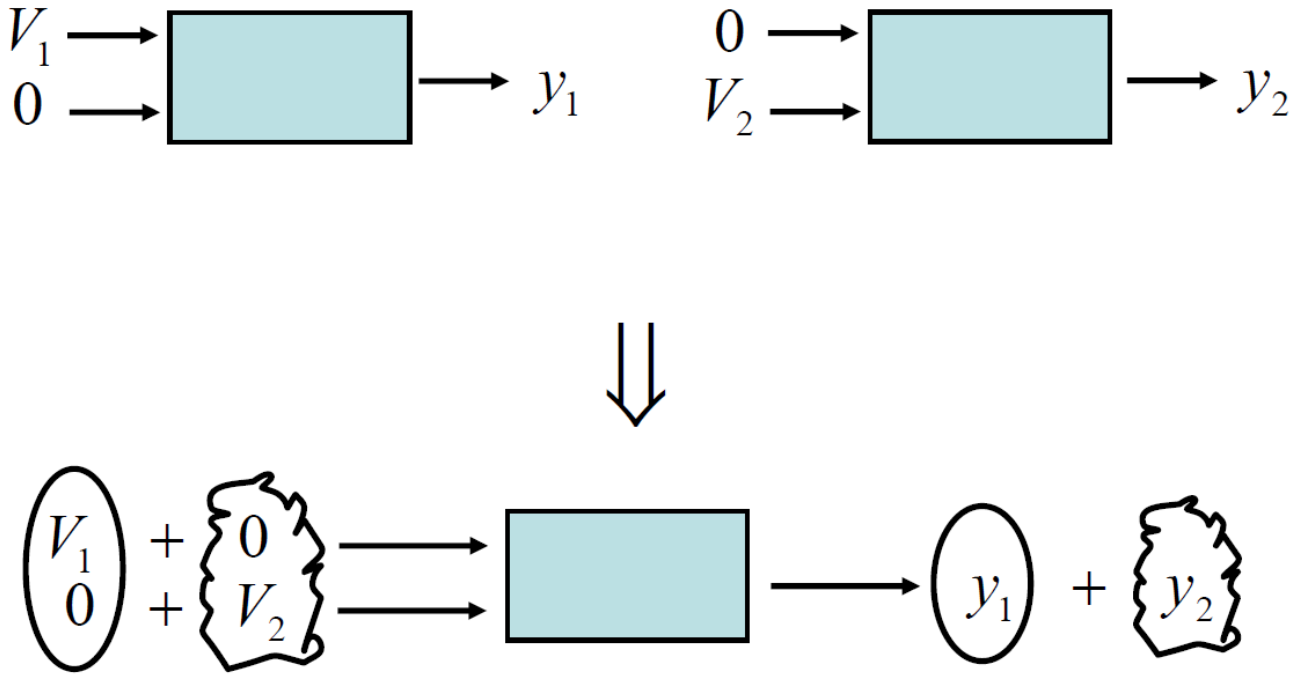

Anant Agarwal and Jeffrey Lang, course materials for 6.002 Circuits and Electronics, Spring 2007. MIT OpenCourseWare(http://ocw.mit.edu/), Massachusetts Institute of Technology.

Superposition

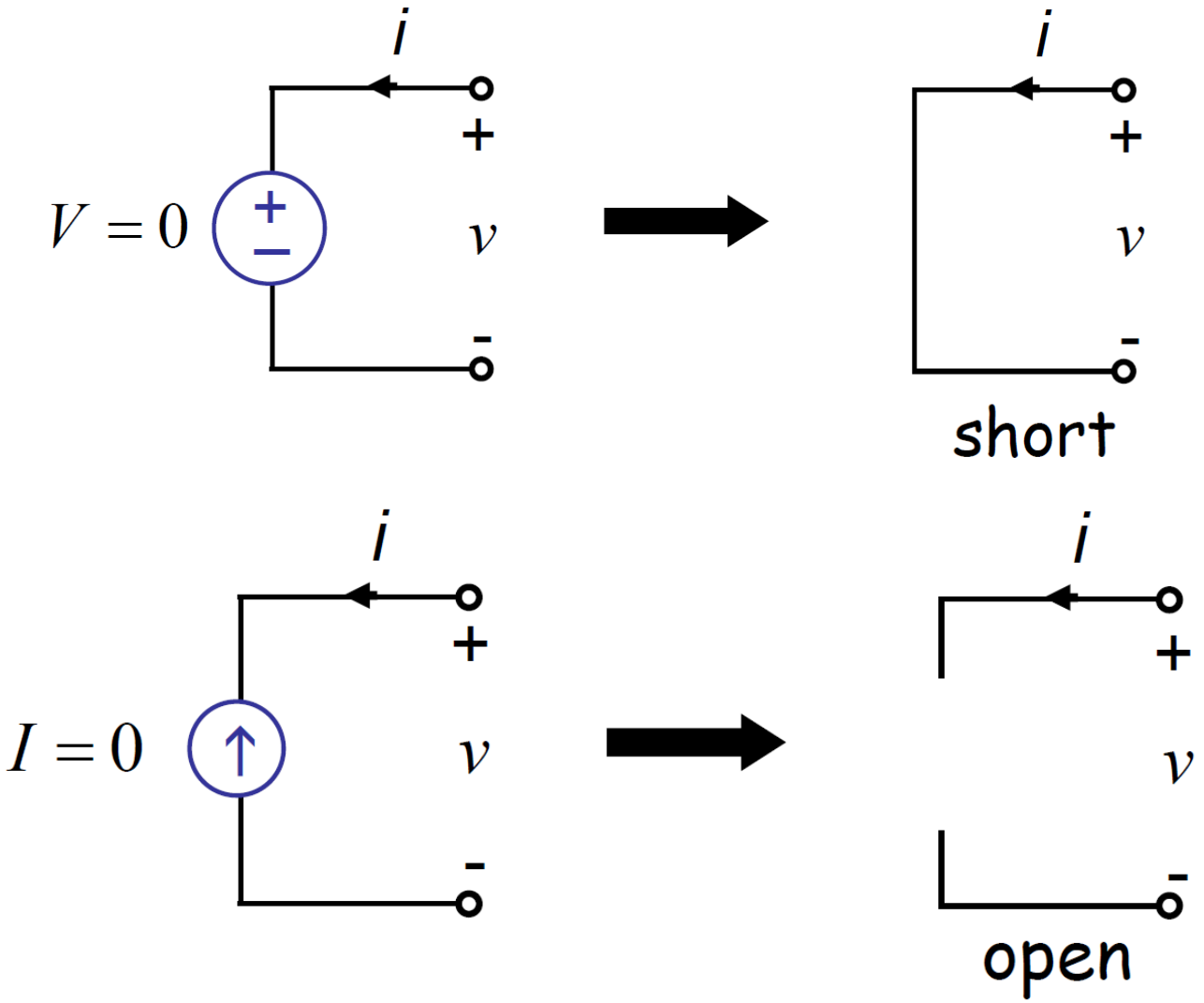

An example

Find e using superposition principle

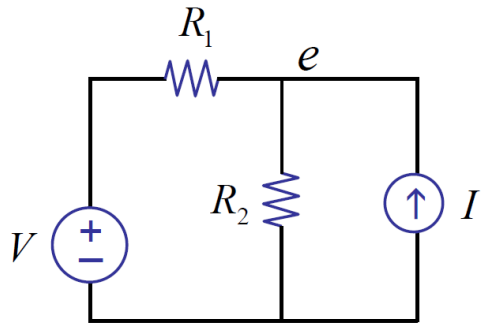

V acting alone

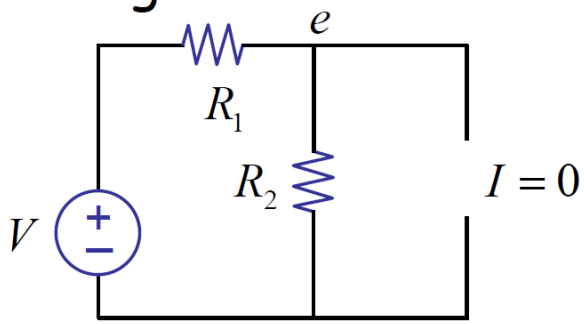

$I = 0$ $\quad e_V = \dfrac{R_2}{R_1 + R_2} V$

I acting alone

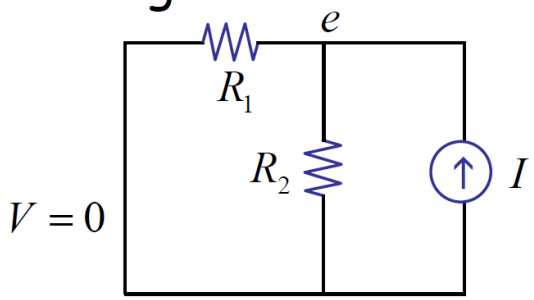

$e_I = \dfrac{R_1 R_2}{R_1 + R_2} I$

sum ⟶ superposition

$$e = e_V + e_I = \frac{R_2}{R_1 + R_2} V + \frac{R_1 R_2}{R_1 + R_2} I$$

Example 5.1

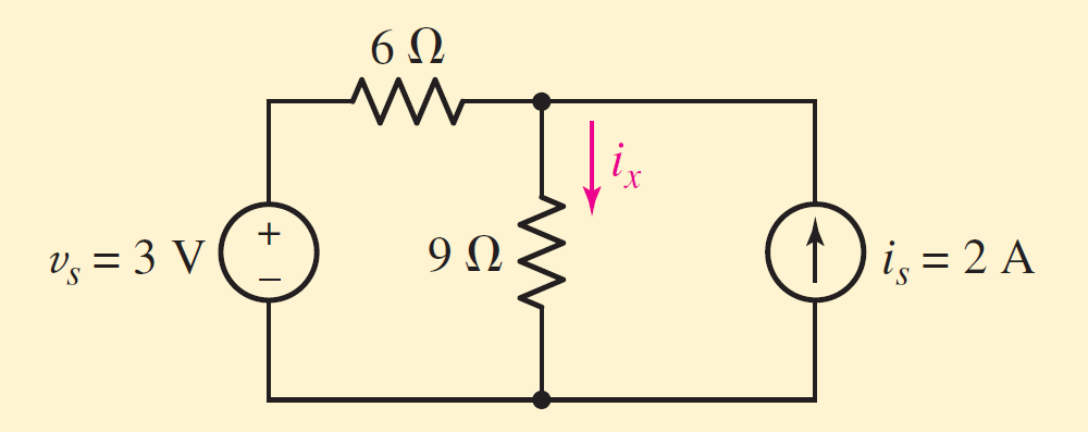

For the circuit of Fig., use superposition to determine the unknown branch current ix.

Ans: 1A

Example 5.3

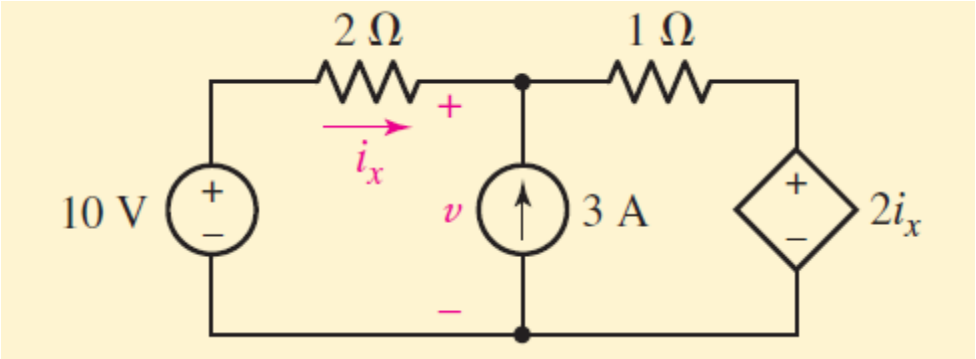

In the circuit of Fig., use the superposition principle to determine the value of ix

Ans: 1.4 A

ECE113- Basic Electronics

Lecture 8: Source equivalence, Thevenin and Norton's Theorems

Dr. Sanat K Biswas, Assistant Professor

Office: B602, Research and Development Block

Email: sanat@iiitd.ac.in

INDRAPRASTHA INSTITUTE *of*
INFORMATION TECHNOLOGY
DELHI

Motivation

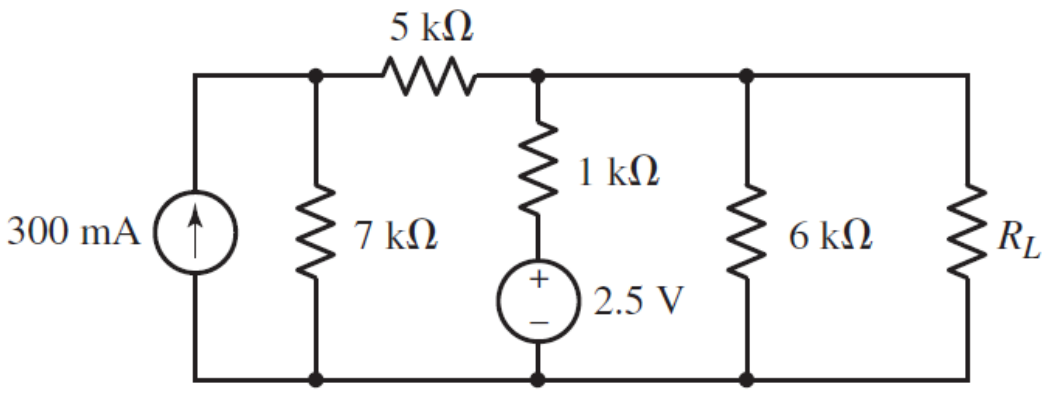

- Some times the load resistance is subject to change
- Recalculation of circuit is necessary for each trial value of resistance

Practical voltage source

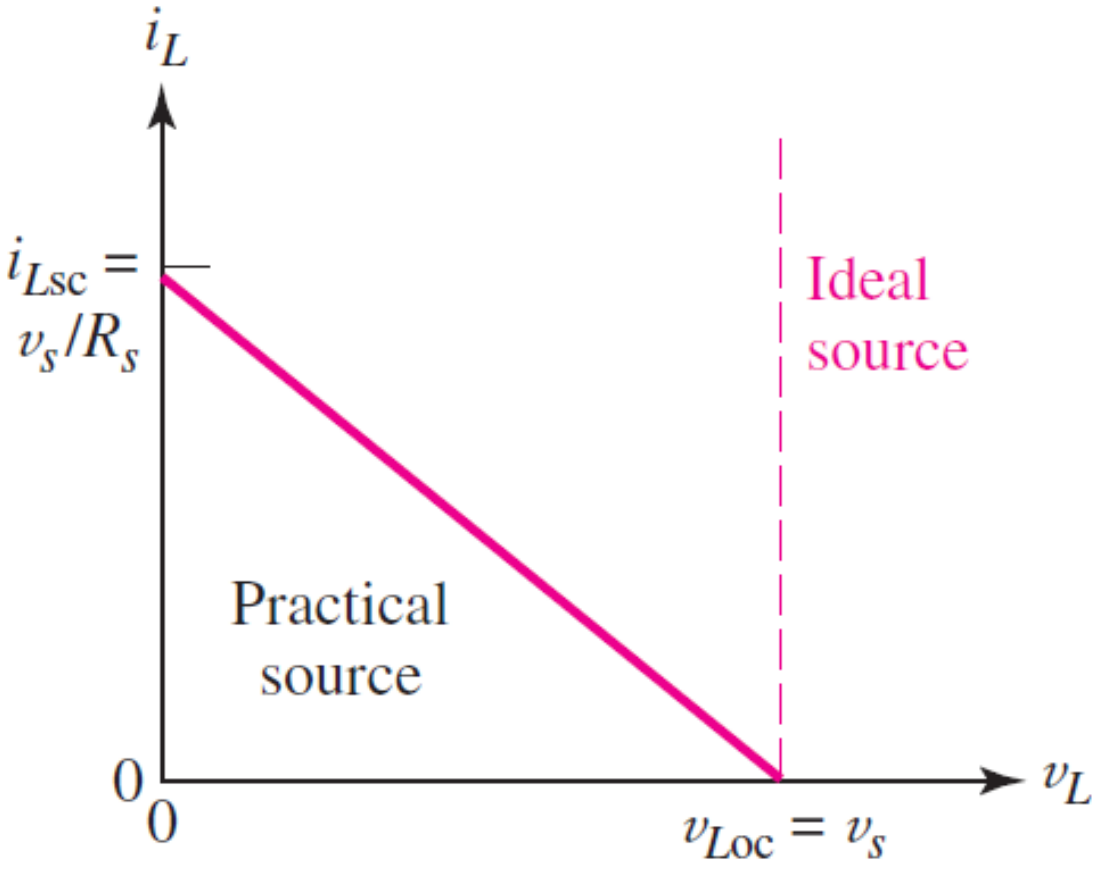

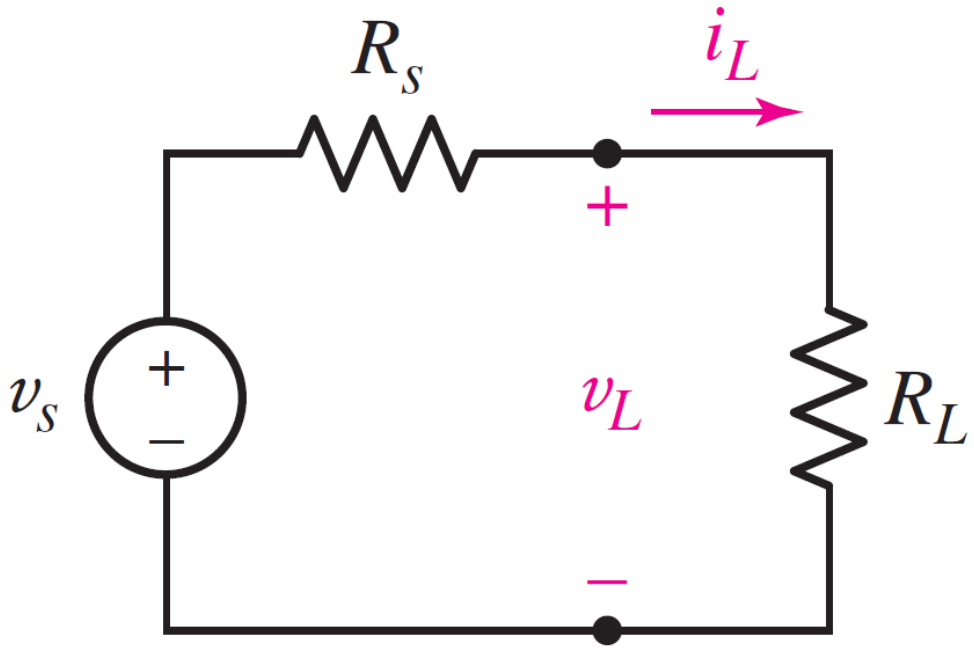

$$v_L = v_s - R_s i_L$$

Practical current source

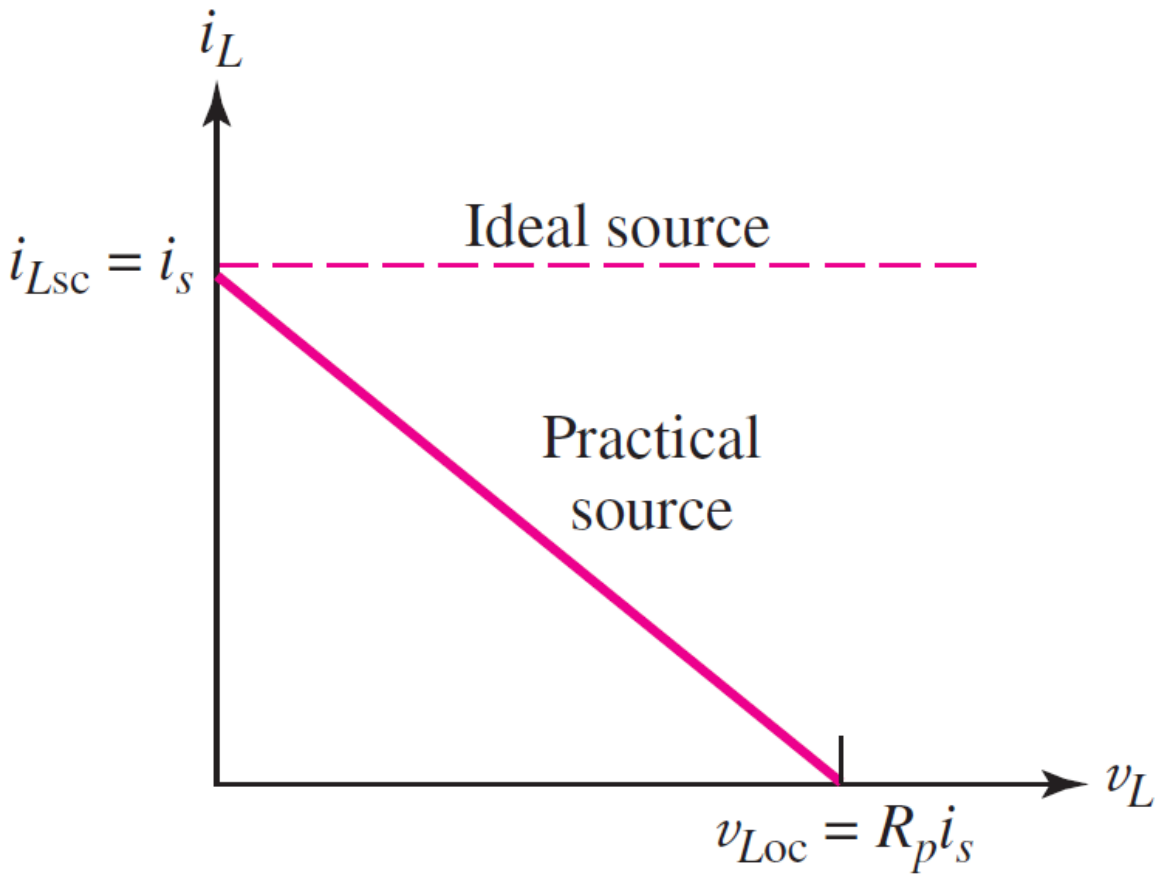

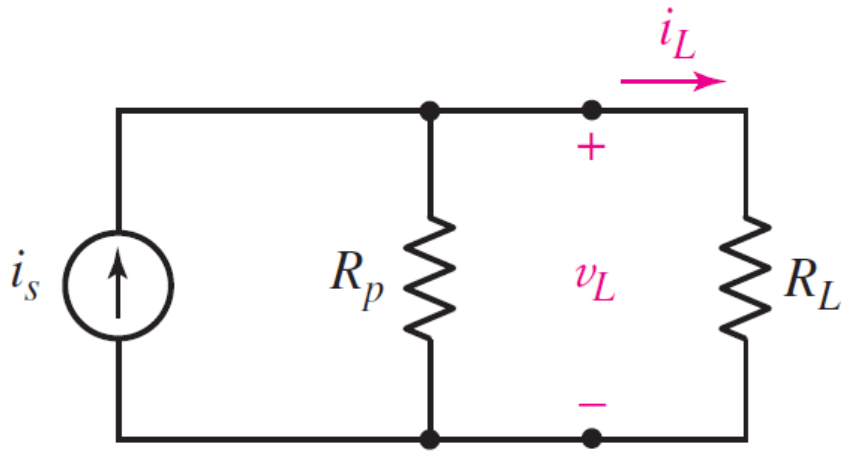

$$i_L = i_s - \frac{v_L}{R_p}$$

Source equivalence

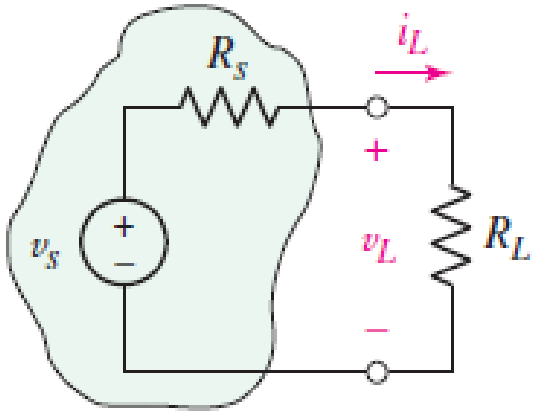

(a)

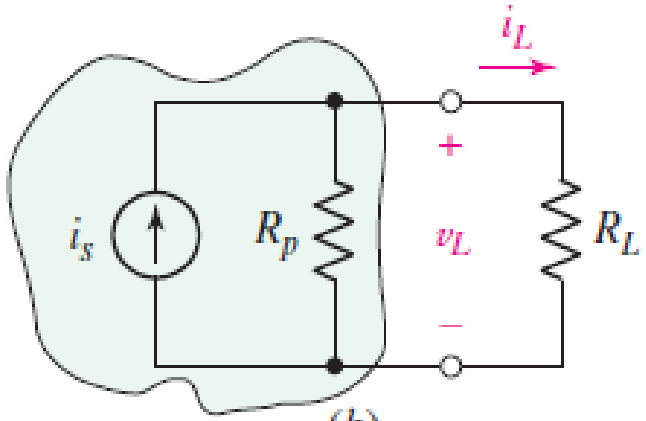

(b)

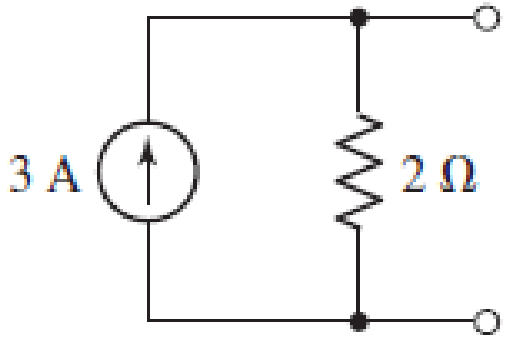

(a)

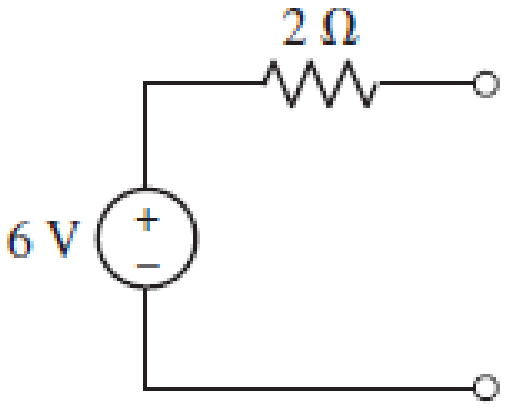

(b)

Thevenin's Theorem

- Any linear circuit containing several voltages and resistances can be replaced by just one single voltage in series with a single resistance connected across the load

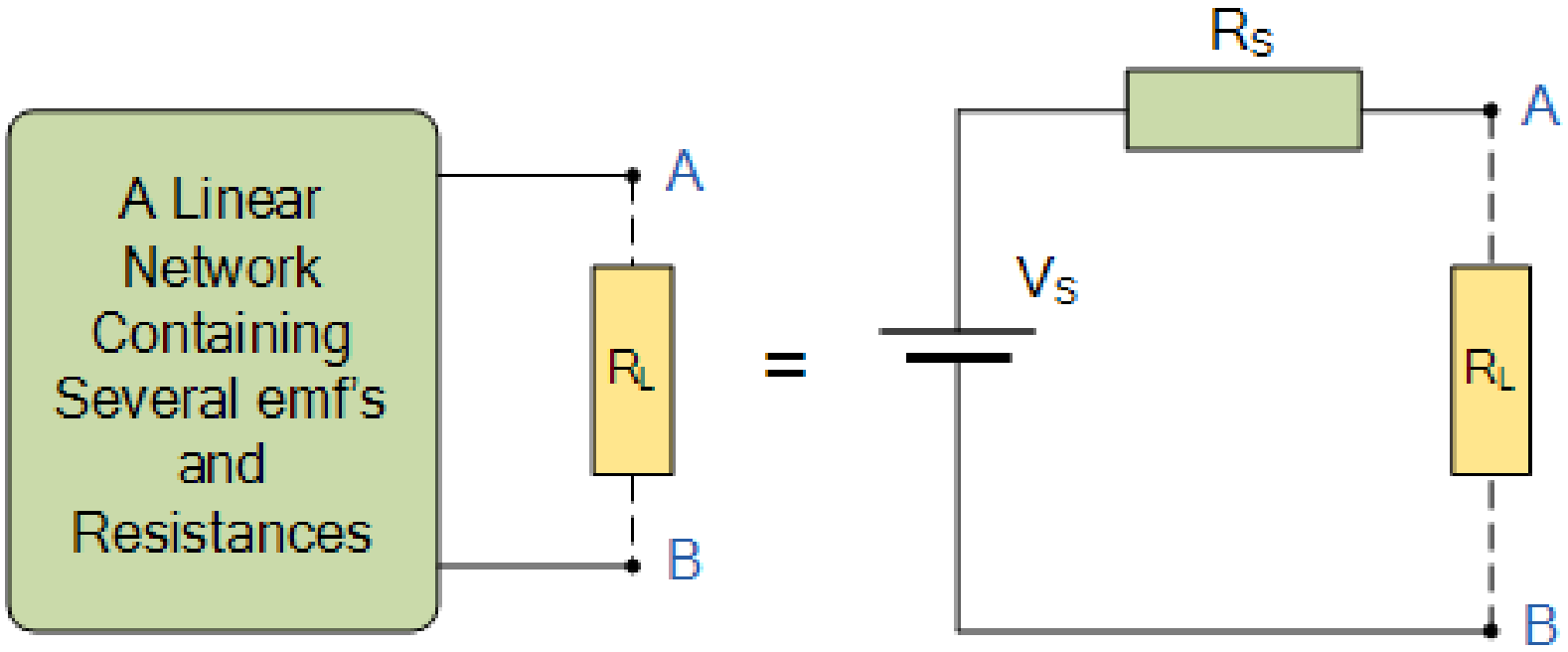

Thevenin's Theorem

1. **Given any linear circuit, rearrange it in the form of two networks, *A* and *B*, connected by two wires.** Network *A* is the network to be simplified; *B* will be left untouched.
2. **Disconnect network *B*.** Define a voltage v_{oc} as the voltage now appearing across the terminals of network *A*.
3. **Turn off or "zero out" every independent source in network *A* to form an inactive network.** Leave dependent sources unchanged.
4. **Connect an independent voltage source with value v_{oc} in series with the inactive network.** Do not complete the circuit; leave the two terminals disconnected.
5. **Connect network *B* to the terminals of the new network *A*.** All currents and voltages in *B* will remain unchanged.

Proof

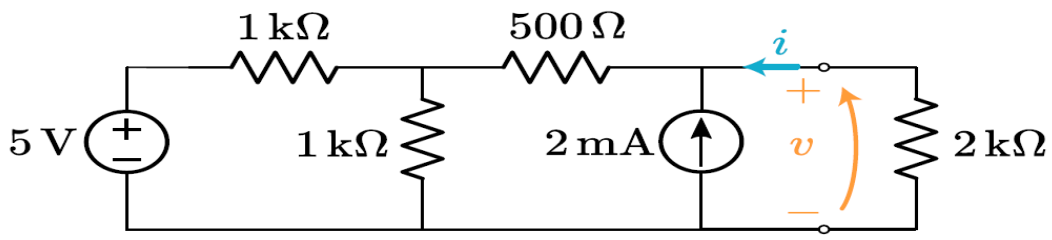

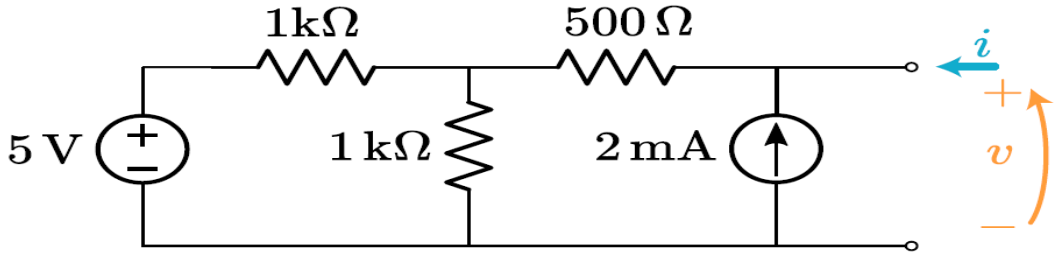

$v = V_T - i\,R_T$, where V_T and R_T are to be discovered

Add an external current source which does not change v

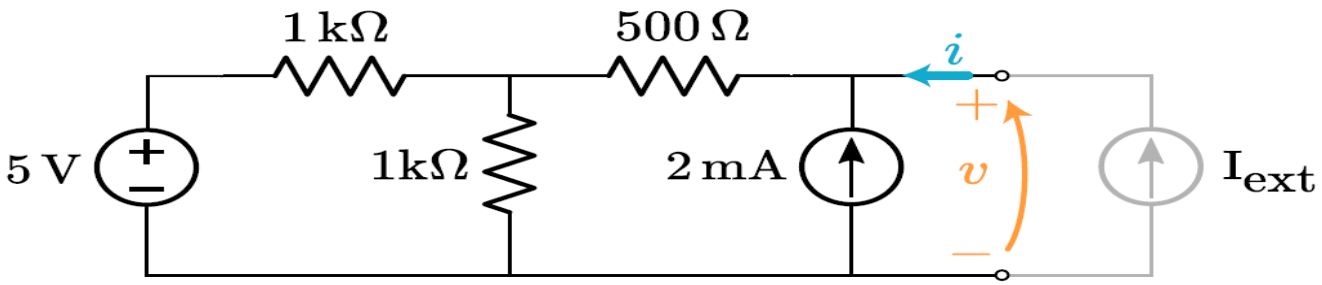

https://spinningnumbers.org/a/thevenin-proof.html

Proof

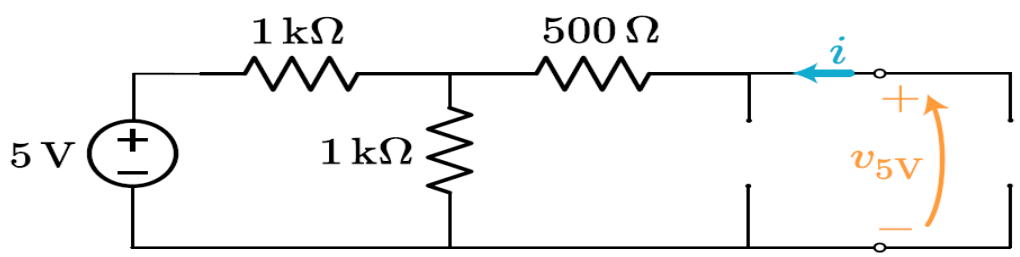

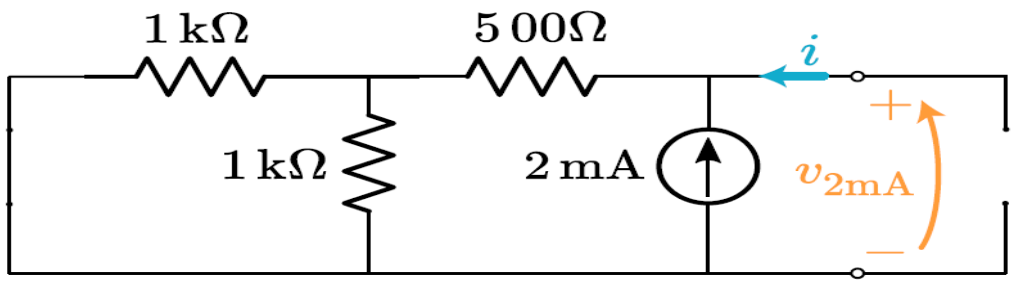

$$v_{5V} = 5\,\frac{1000}{1000 + 1000} = 2.5\ \mathrm{V}$$

$$R_{equiv} = 1000\ \Omega$$

$$v_{2\,mA} = 2\,mA \cdot R_{equiv} = 2\,mA \cdot 1000\Omega = 2\ V$$

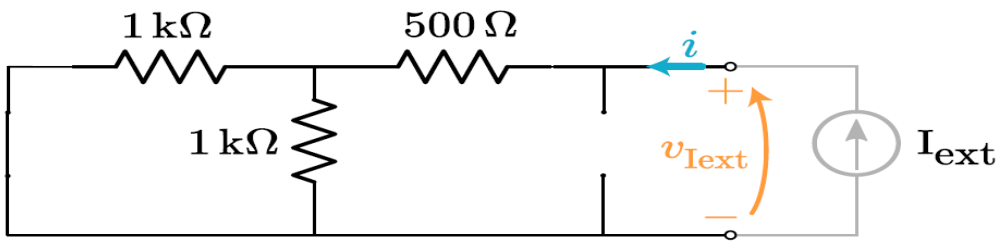

$$v_{Iext} = i\,R_{equiv} = I_{ext} \cdot 1000$$

Proof

$$v = v_{5\mathrm{V}} + v_{2\,\mathrm{mA}} + v_{\mathrm{Iext}}$$

$$v = 2.5 + 2 + 1000\,\mathrm{I_{ext}}$$

$$v = 4.5 + 1000\,i$$

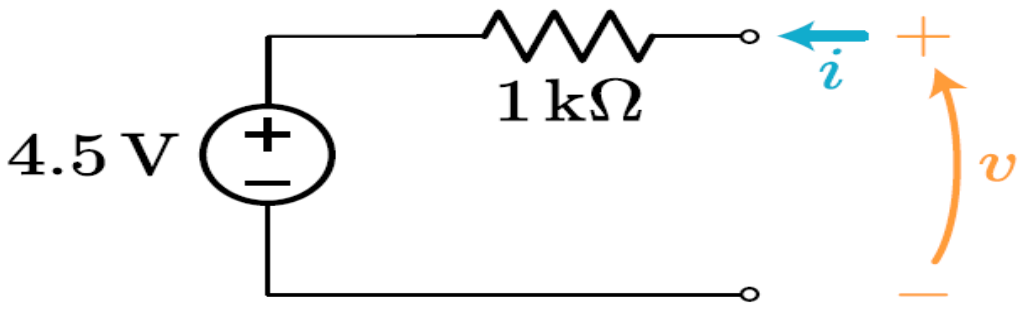

Equivalent circuit

Example: Find Thevenin Equivalent

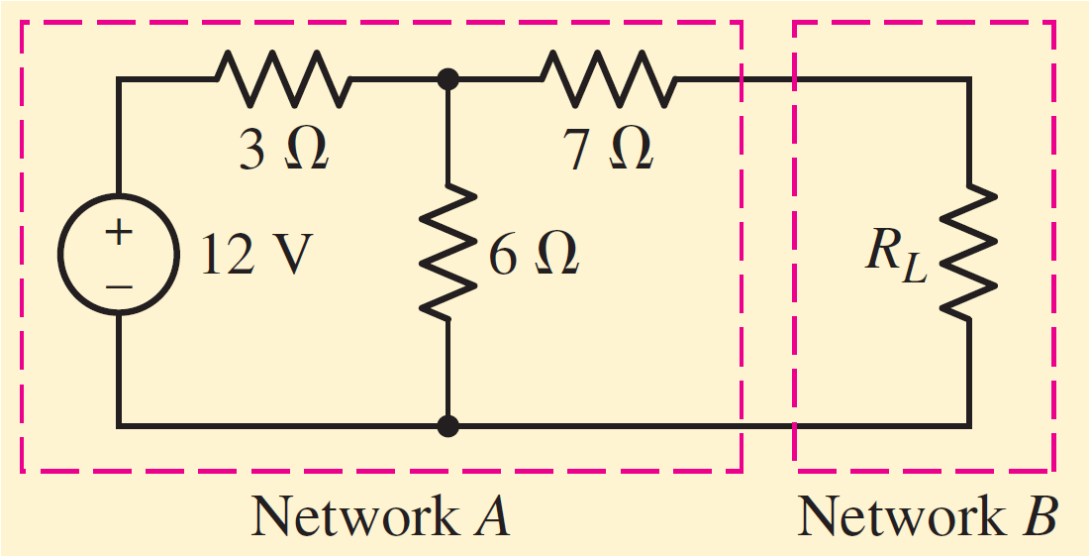

Ans: 9 ohm, 8V

Example: Find Thevenin Equivalent

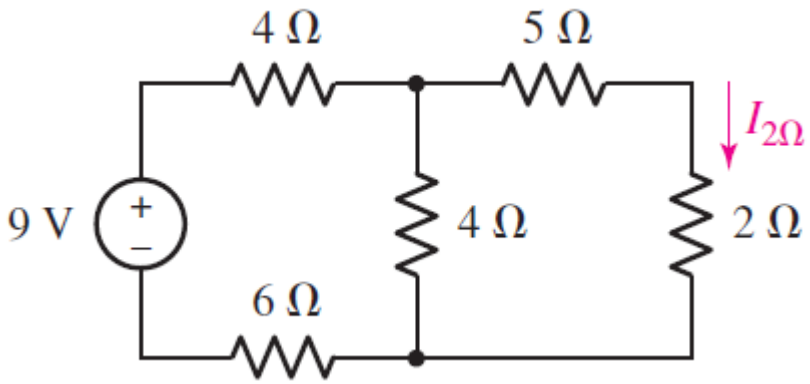

Ans: 7.857 ohm, 2.571 V, 260.8 mA

Norton's Theorem

Any linear circuit containing several energy sources and resistances can be replaced by a single Constant Current generator in parallel with a Single Resistor

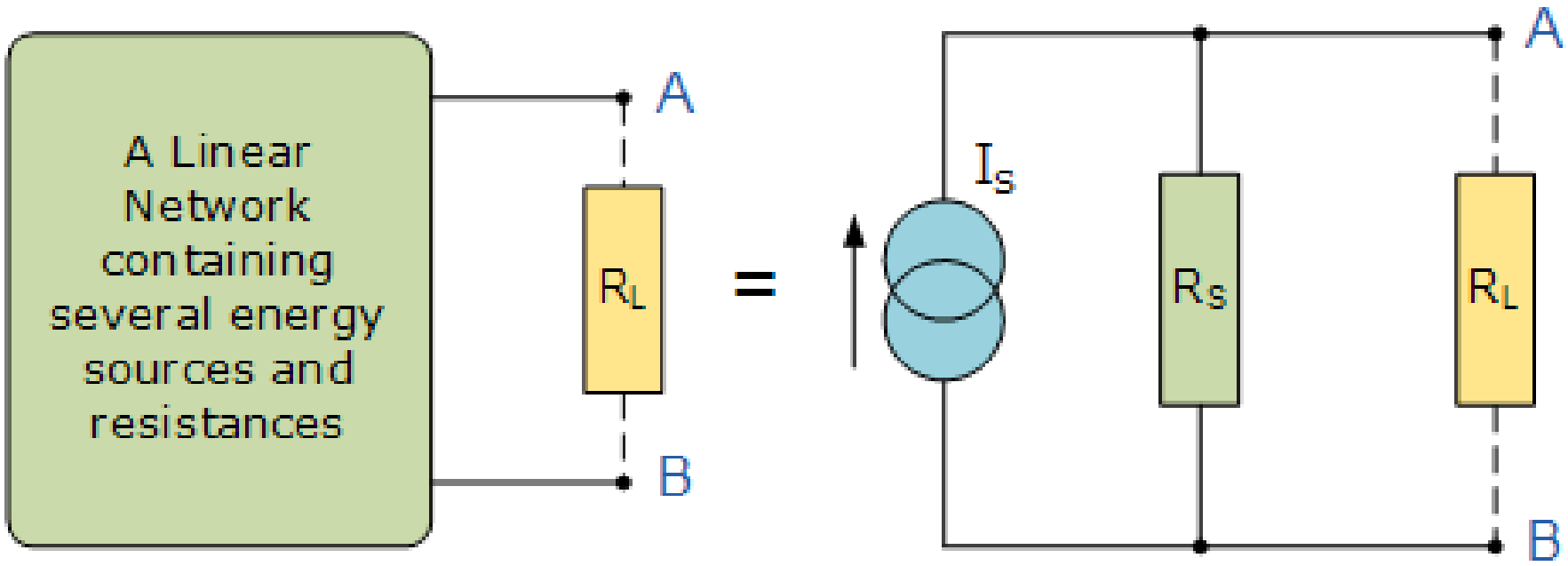

Norton's Theorem

1. **Given any linear circuit, rearrange it in the form of two networks, *A* and *B*, connected by two wires.** Network *A* is the network to be simplified; *B* will be left untouched. As before, if either network contains a dependent source, *its controlling variable must be in the same network*.
2. **Disconnect network *B*, and short the terminals of *A*.** Define a current i_{sc} as the current now flowing through the shorted terminals of network *A*.
3. **Turn off or "zero out" every independent source in network *A* to form an inactive network.** Leave dependent sources unchanged.
4. **Connect an independent current source with value i_{sc} in parallel with the inactive network.** Do not complete the circuit; leave the two terminals disconnected.
5. **Connect network *B* to the terminals of the new network *A*.** All currents and voltages in *B* will remain unchanged.

Example: Find Norton Equivalent

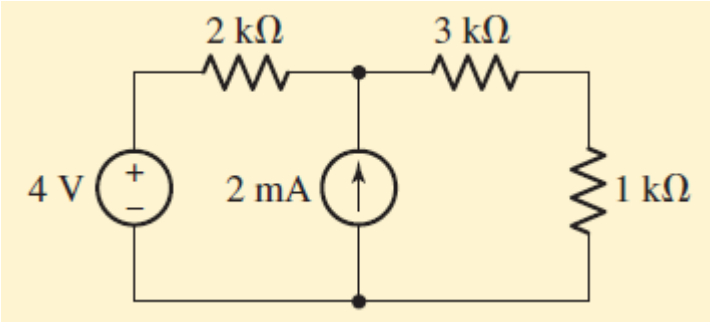

Ans: 1.6 mA, 5 kOhm

Example: Find Thevenin and Norton Equivalent

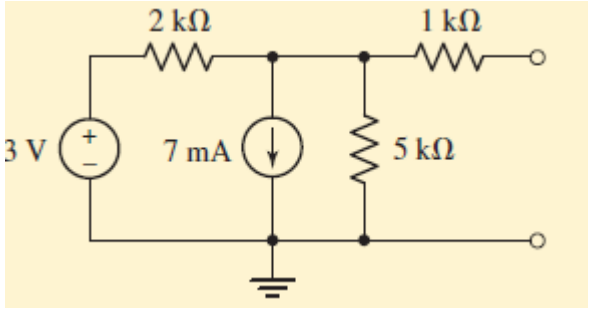

Ans: −7.857 V, −3.235 mA, 2.429 k.

Reference:

- Engineering Circuit analysis, William H. Hayt Jr., Jack E. Kemmerly and Steven M. Durbin, 8th Edition, Tata McGraw Hill.
- http://www.electronics-tutorials.ws/dccircuits/dcp_8.html
- http://www.electronics-tutorials.ws/dccircuits/dcp_7.html

ECE 113- Basic Electronics

Lecture 9: Maximum Power Transfer Theorem

Dr. Sanat K Biswas, Assistant Professor

Office: B602, Research and Development Block

Email: sanat@iiitd.ac.in

INDRAPRASTHA INSTITUTE *of*
INFORMATION TECHNOLOGY
DELHI

Thevenin equivalent when dependent source present:

- Find open circuit voltage
- Find Short circuit current
- From source equivalence find R_{th}

Thevenin equivalent when dependent source present:

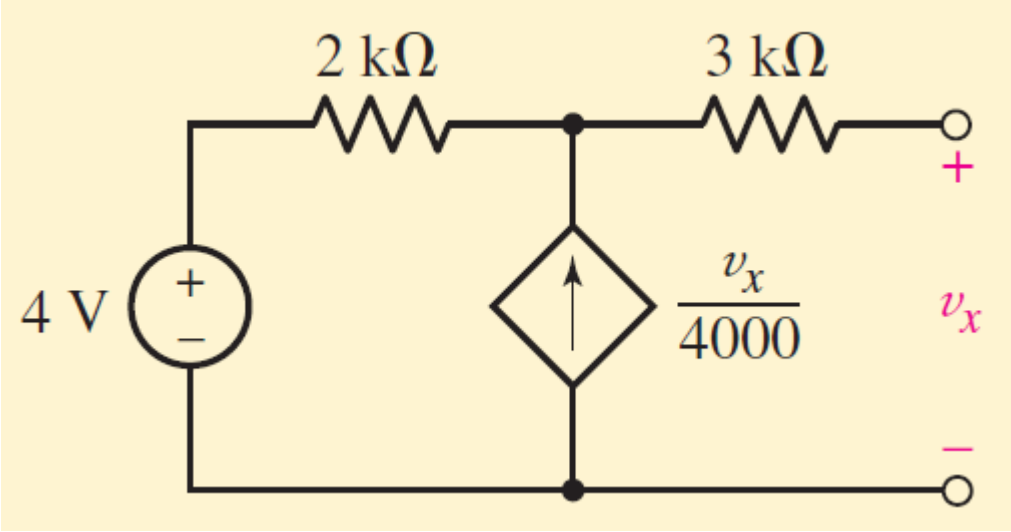

Example 5.9

Determine the Thevenin equivalent circuit

Ans: 8V, 10 K Ohm

Maximum Power Transfer Theorem

- An independent voltage source in series with a resistance R_s, or an independent current source in parallel with a resistance R_s, delivers maximum power to a load resistance R_L such that $R_s = R_L$.

Alternatively

- A network delivers maximum power to a load resistance R_L when R_L is equal to a the Thévenin equivalent resistance of the network.

Maximum Power Transfer Theorem

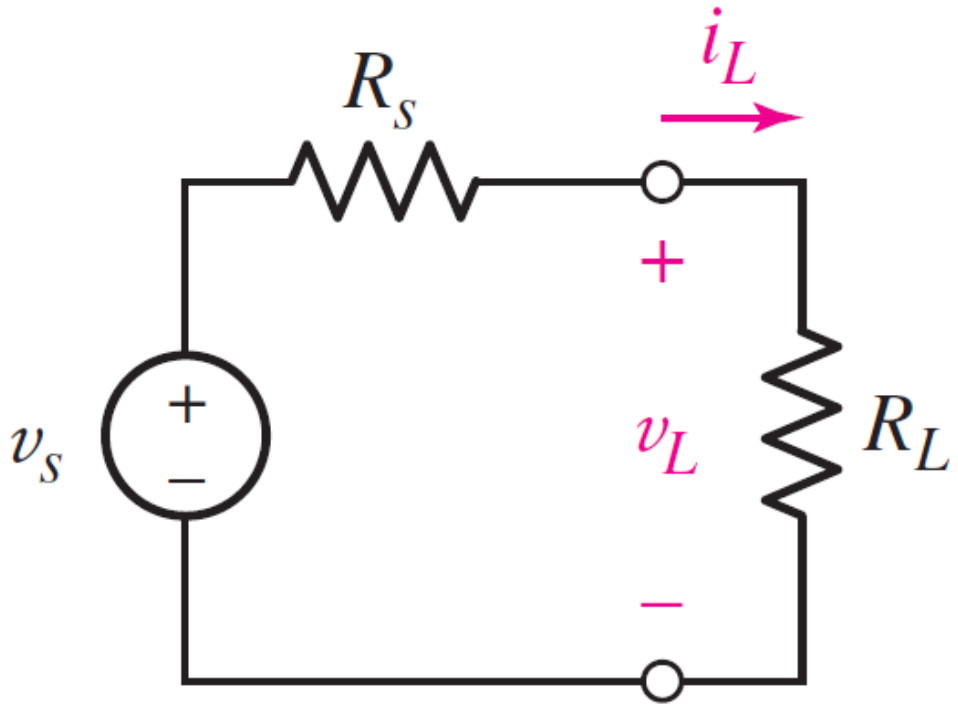

Example 5.11

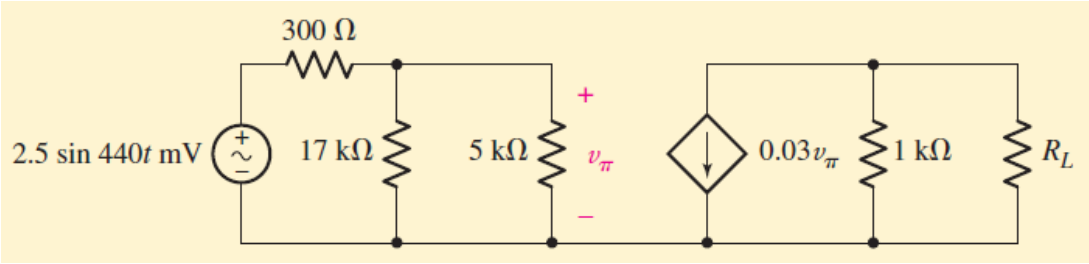

The circuit shown in Fig. is a model for the common-emitter bipolar junction transistor amplifier. Choose a load resistance so that maximum power is transferred to it from the amplifier, and calculate the actual power absorbed.

Ans: 1k, 1.211 sin^2 440*t muW*

Practice 5.10

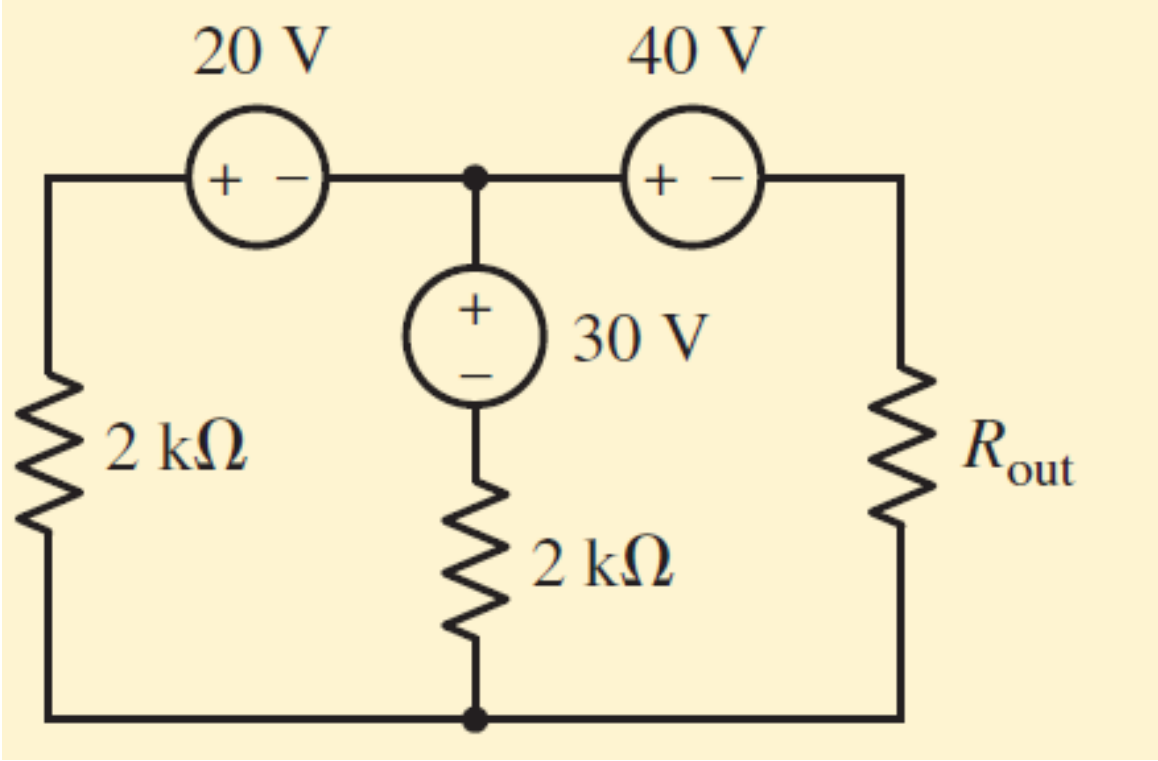

(*a*) If *R*out =3 k, find the power delivered to it.
(*b*) What is the maximum power that can be delivered to any *R*out?
(*c*) What two different values of *R*out will have exactly 20 mW
delivered to them?

Ans: 230 mW; 306 mW; 59.2 k and 16.88 k

ECE 113- Basic Electronics

Lecture 10: Capacitor, Inductor

Dr. Sanat K Biswas, Assistant Professor

Office: B602, Research and Development Block

Email: sanat@iiitd.ac.in

INDRAPRASTHA INSTITUTE *of*
INFORMATION TECHNOLOGY
DELHI

Capacitor and Inductor

- These elements store and deliver finite amount of energy
- Passive linear circuit elements
- The current-voltage relationships for these new elements are time dependent
- Ideal Capacitors and Inductors can neither generate nor dissipate energy

Capacitor

Capacitance: $C = \frac{dQ}{dv}$ or $Q = Cv$

Current through a capacitor: $i = C\frac{dv}{dt}$

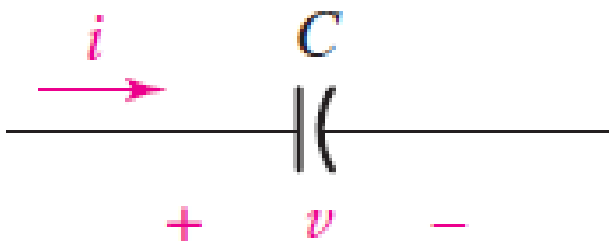

Zero current flowing when applied DC voltage

Unit : Farad (1 C/V)

Capacitor

- A capacitor constructed of two parallel conducting plates of area A, separated by a distance d, has a capacitance

$$C = \frac{\epsilon A}{d}$$

where ε is the permittivity of the material. The higher the permittivity, the greater the capacitance.

Capacitor

Determine the current *i* flowing through the capacitor of Fig. 7.1 for the two voltage waveforms of Fig. 7.3 if $C = 2$ F.

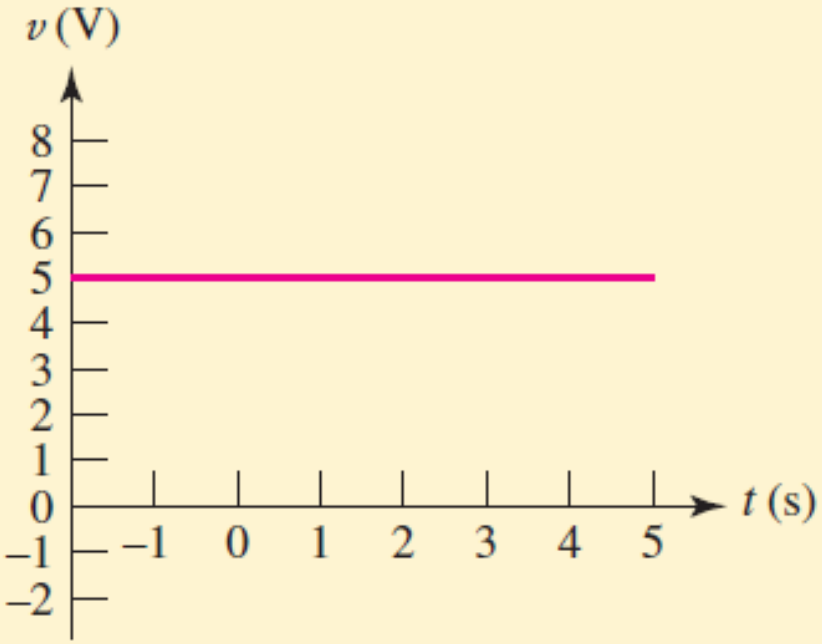

(*a*)

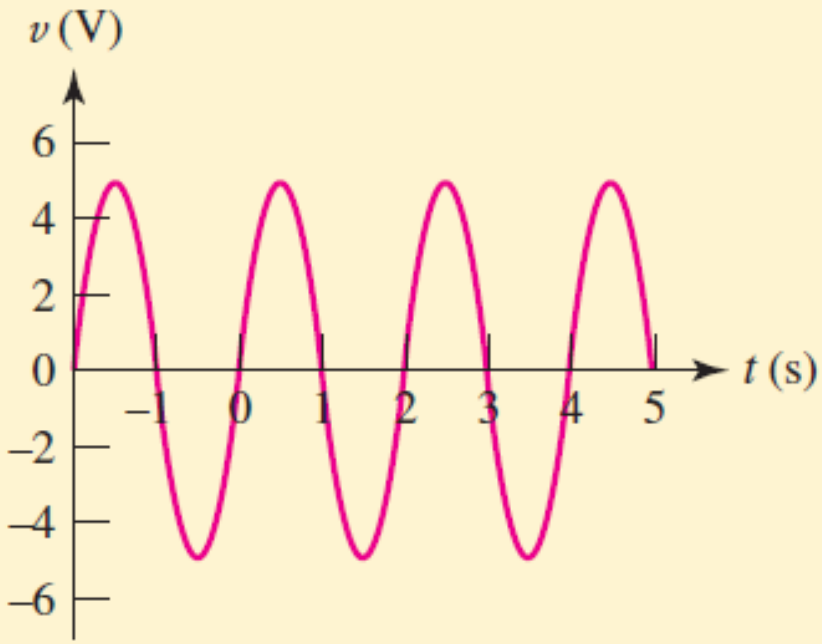

(*b*)

Capacitor

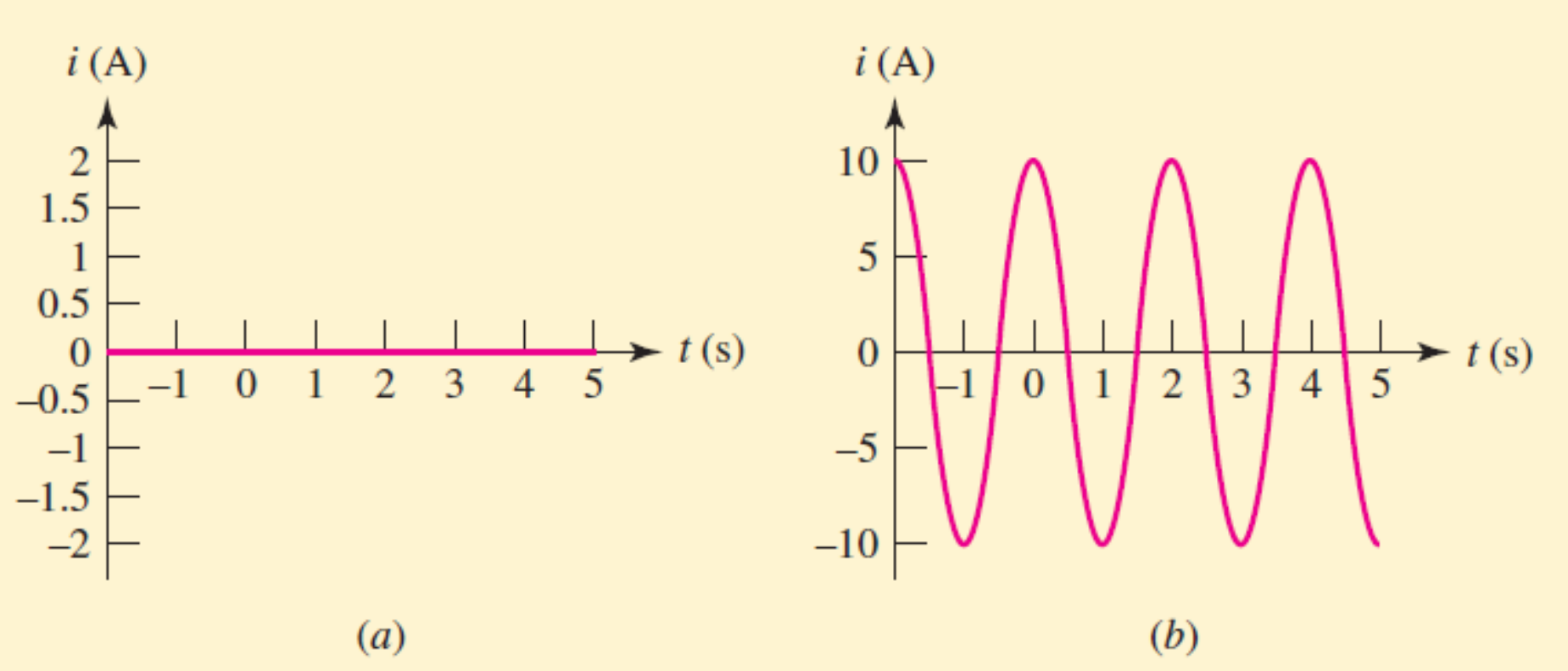

Capacitor

Current-voltage relationship

$$v(t) = \frac{1}{C}\int_{t_0}^{t} i(t')\,dt' + v(t_0)$$

Find the capacitor voltage that is associated with the current shown graphically in Fig. 7.5*a*. The value of the capacitance is 5 μF.

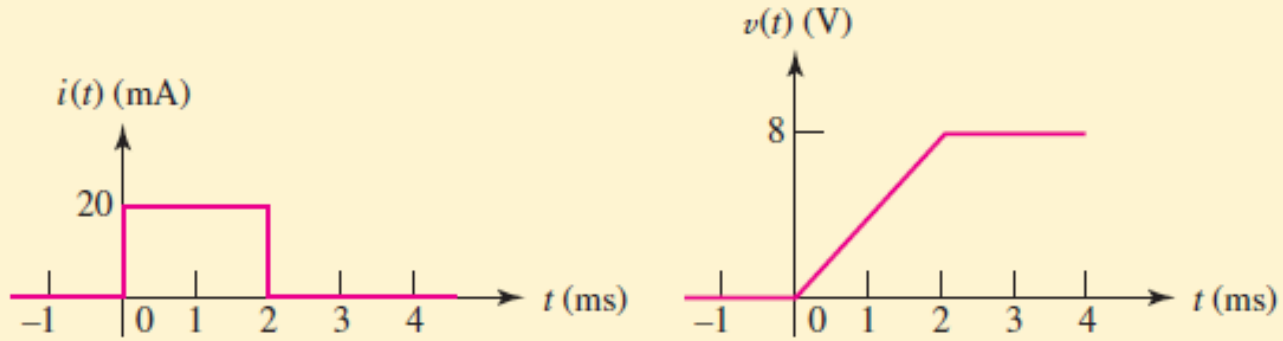

Capacitor

- Power:

$$p = vi = vC\frac{dv}{dt}$$

Stored energy can be calculated by integrating power considering zero initial voltage:

$$w_C(t) = \frac{1}{2}Cv(t)^2$$

Inductor

Magnetic flux:

$$\Phi = BScos\theta$$

Inductance

$$L = \frac{\Phi}{i}$$

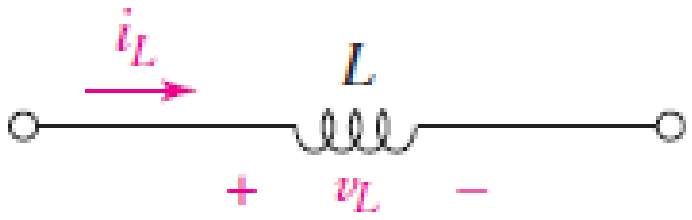

Induced voltage (Faraday's Law of induction)

$$v_L = \frac{d\Phi}{dt} = L\frac{di_L}{dt}$$

Inductor

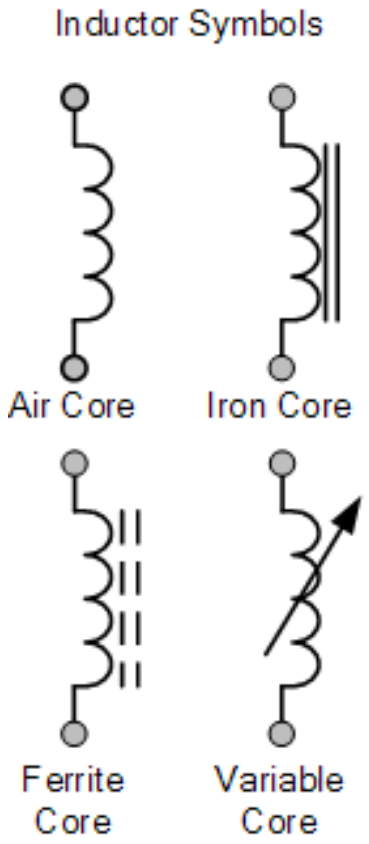

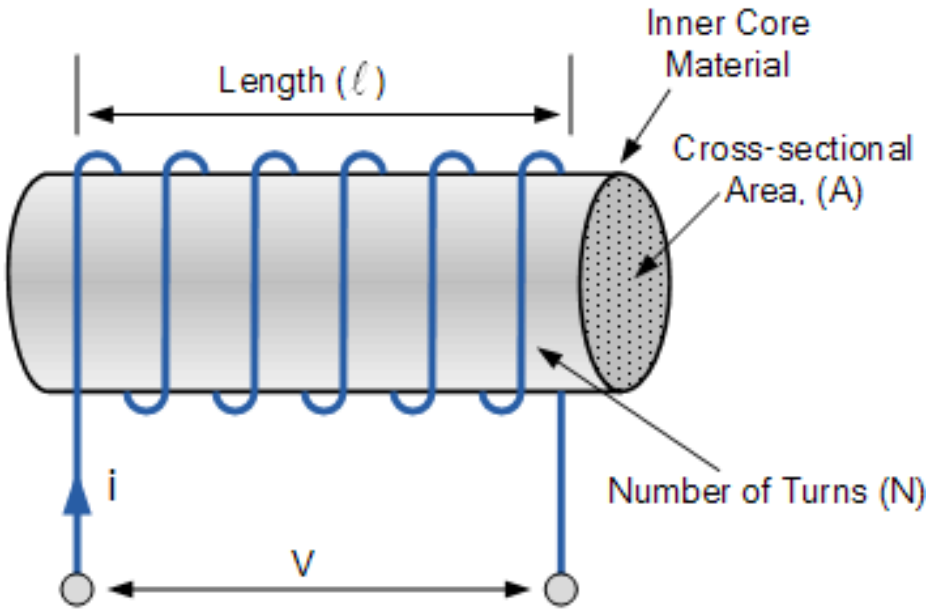

$$L = \frac{N^2 \mu A}{l}$$

μ is the permeability of the core

Figure from:
https://www.electronics-tutorials.ws/inductor/inductor.html

Inductor

Given the waveform of the current in a 3 H inductor as shown in Fig. 7.12*a*, determine the inductor voltage and sketch it.

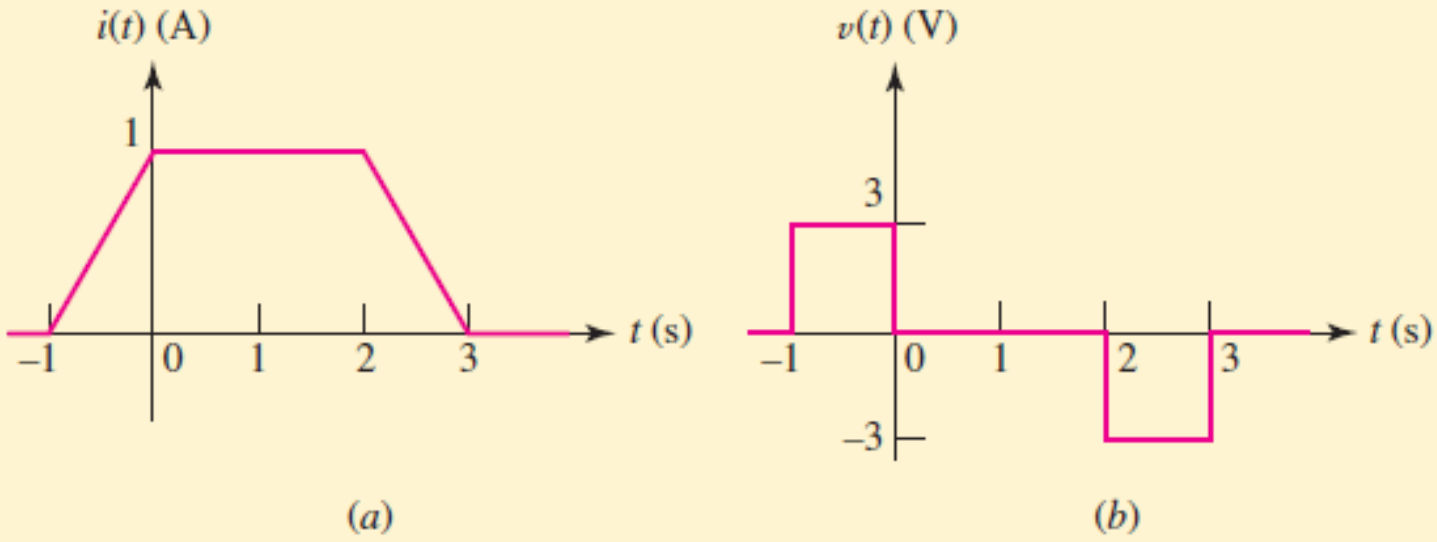

FIGURE 7.12 (*a*) The current waveform in a 3 H inductor. (*b*) The corresponding voltage waveform, $v = 3\, di/dt$.

Inductor

Voltage-current relationship

$$i(t) = \frac{1}{L}\int_{t_0}^{t} v\,dt' + i(t_0)$$

Power $p = vi = Li\frac{di}{dt}$

Energy (zero initial current): $w_L(t) = \frac{1}{2}Li(t)^2$

More reading: Permittivity vs. Permeability

Basis For Comparison	Permittivity	Permeability
Definition	The Permittivity measures the resistance offer by the material in the formation of an electric field.	The permeability measures the ability of the material to allow the magnetic lines of force to pass through it.
Symbol	ε	μ
Formula	Ratio of displacement field strength to the electric field strength.	Ratio of magnetic field density and magnetic field strength.
SI Unit	Faraday/meter	Henry/meter
Physical Basis	Polarization	Magnetization
Free Space	The permittivity of the free space is 8.85 F/m.	The permeability of the free space is 1.26 H/m.
Field	Electric Field	Magnetic Field
Used in	Capacitor	Inductor and Transformer core

Applicability of KCL and KVL

- L and C are linear elements
- Kirchhoff's laws can be applied (are not restricted to only resistance)

Inductors in series

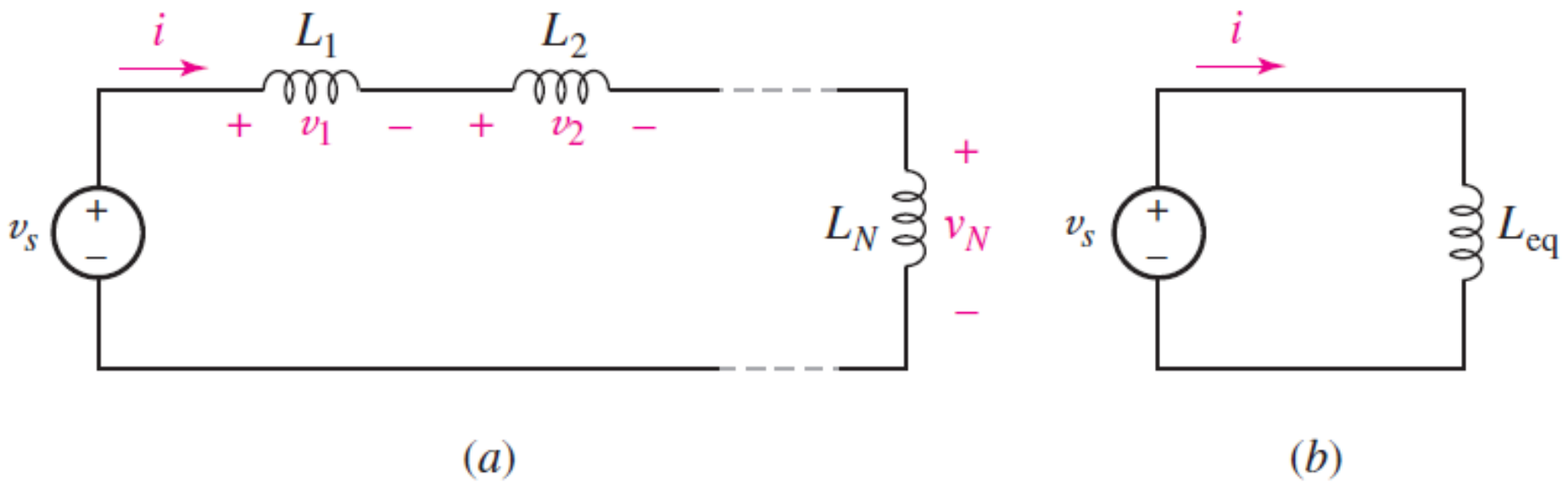

Inductors in parallel

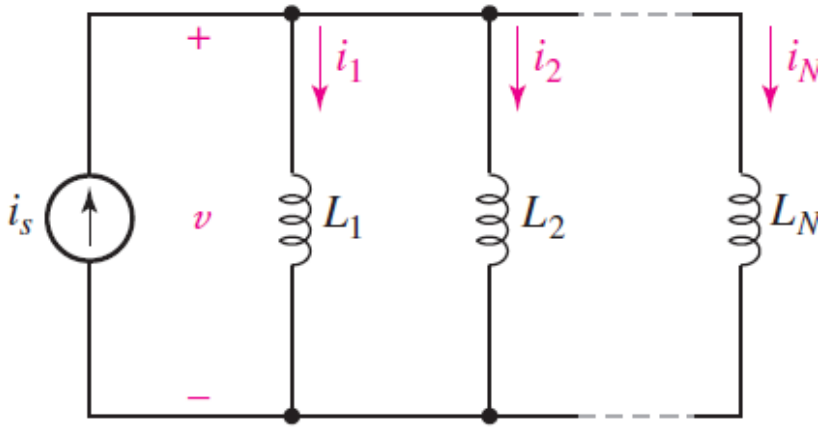

(a)

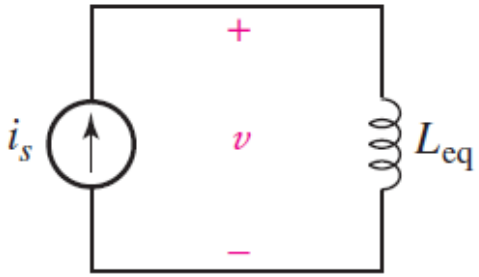

(b)

Capacitors in series

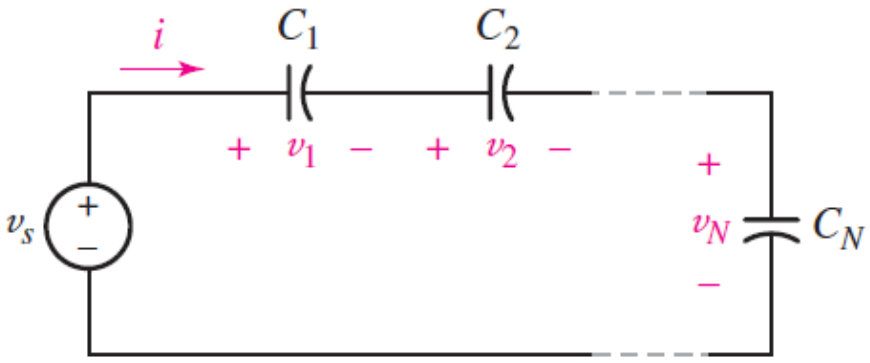

(a)

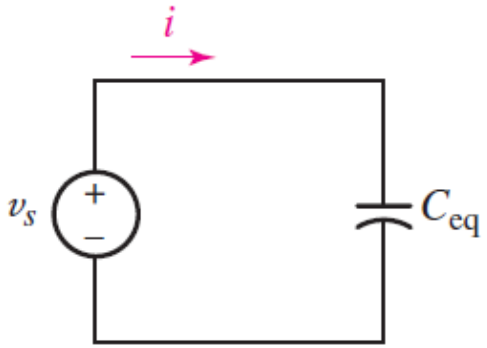

(b)

Capacitors in parallel

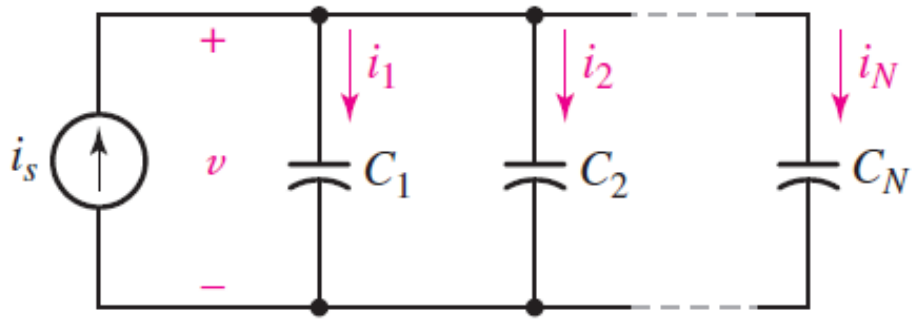

(a)

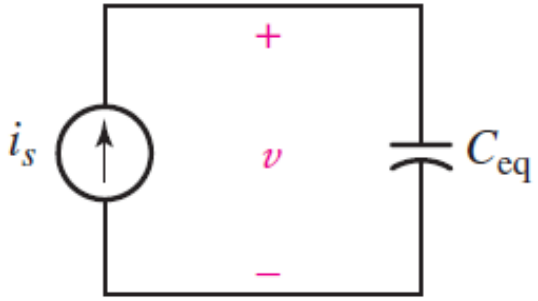

(b)

Example 7.8

- Simplify the network

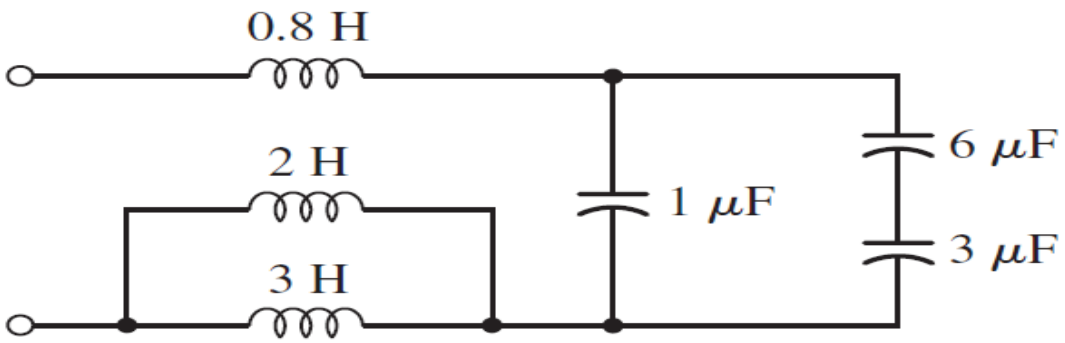

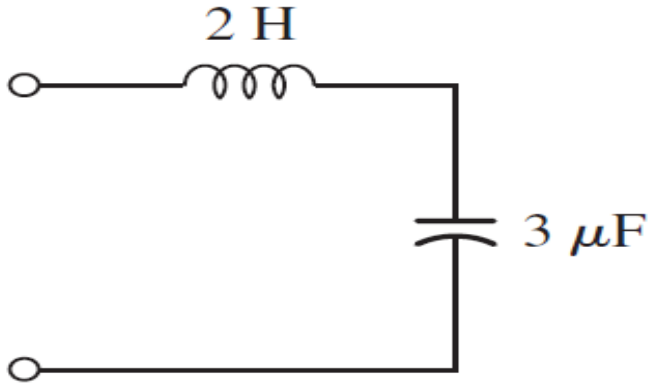

Nodal equations for RLC circuit- Example

Example 7.9: Write appropriate nodal equations for the circuit

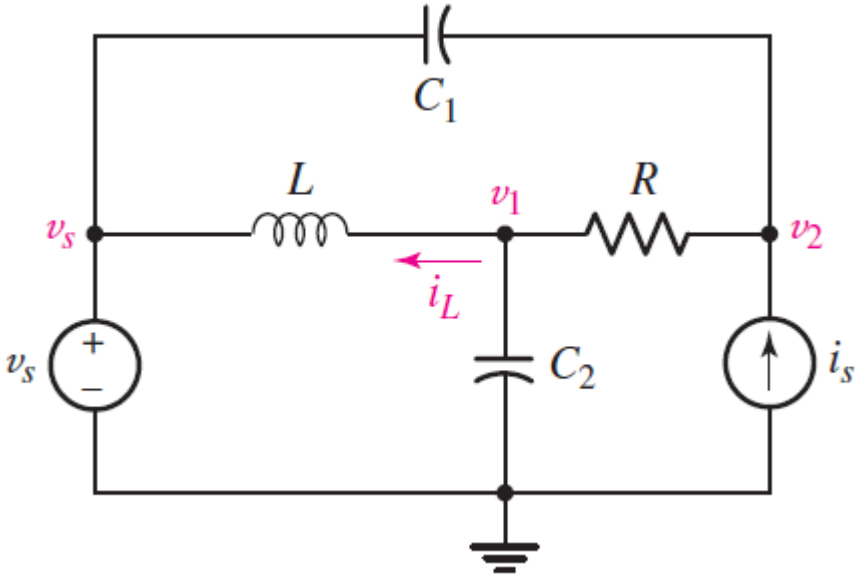

ECE113-Basic Electronics

Lecture 11: RL and RC circuit – Part 1

Dr. Sanat K Biswas, Assistant Professor

Office: B602, Research and Development Block

Email: sanat@iiitd.ac.in

INDRAPRASTHA INSTITUTE *of*
INFORMATION TECHNOLOGY
DELHI

Response of a circuit

- In presence of L and C, a circuit's behavior is expressed using differential equation
- Equations obtained by applying KCL and KVL are homogeneous linear differential equations
- Solution of this type of equation is voltage or current as a function of time (in electrical circuit context)
- The solution is also called as **response** of a circuit

Natural response

- It is the response of a circuit when there is no source.
- Depends entirely on the initial condition (i.e. energy stored in either L or C).
- This response dies out due to the internal resistance of L/C and hence called the **transient response.**
- The mathematical counterpart is called the complementary function

Forced Response

- It is the response of a circuit when there is an independent source is acting on
- The part of response resembles the nature of the particular source
- Mathematical counterpart is called the particular solution
- This is added on the natural response of the circuit

Natural response of a RL circuit

Initial condition: $i(0) = I_0$

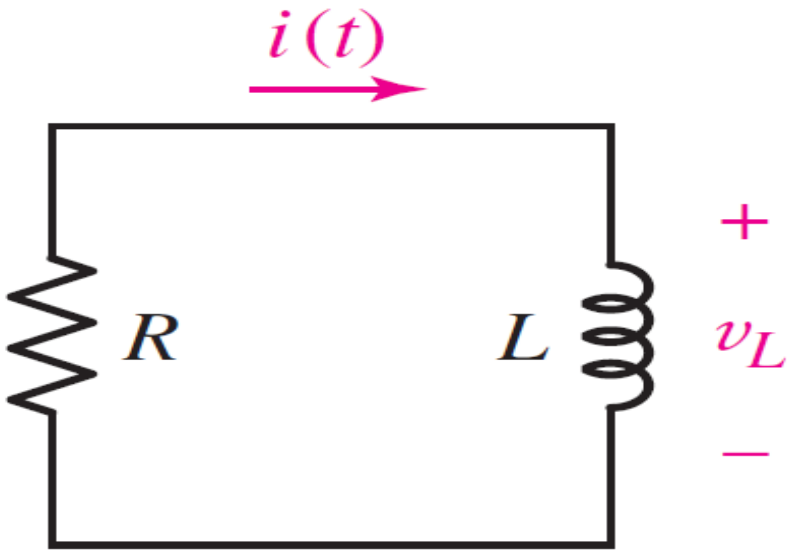

$$Ri + v_L = Ri + L\frac{di}{dt} = 0$$

$$\frac{di}{dt} + \frac{R}{L}i = 0$$

$$i(t) = I_0 e^{-\frac{R}{L}t}$$

Example 8.1

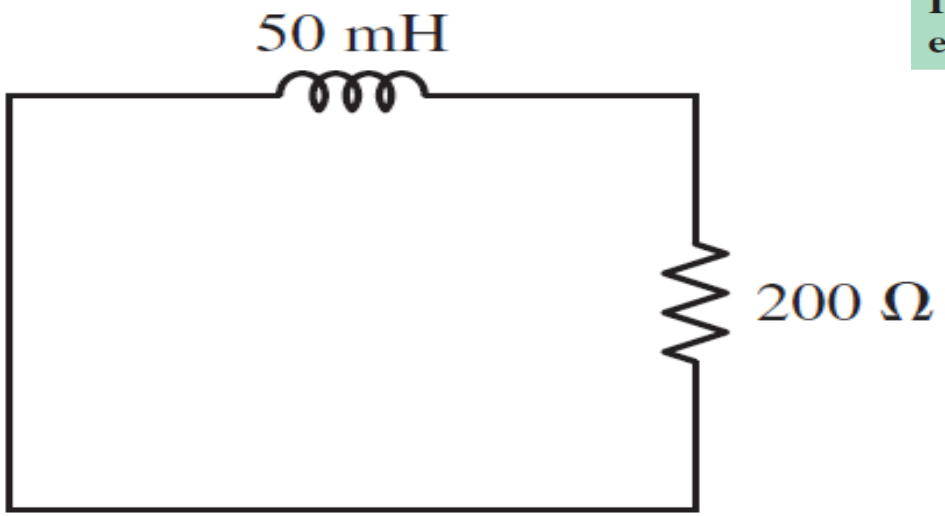

If the inductor of Fig. 8.2 has a current $i_L = 2$ A at $t = 0$, find an expression for $i_L(t)$ valid for $t > 0$, and its value at $t = 200\ \mu s$.

Ans: 898.66 mA

Example 8.2

For the circuit in the left, find the voltage labeled v at t = 200 ms.

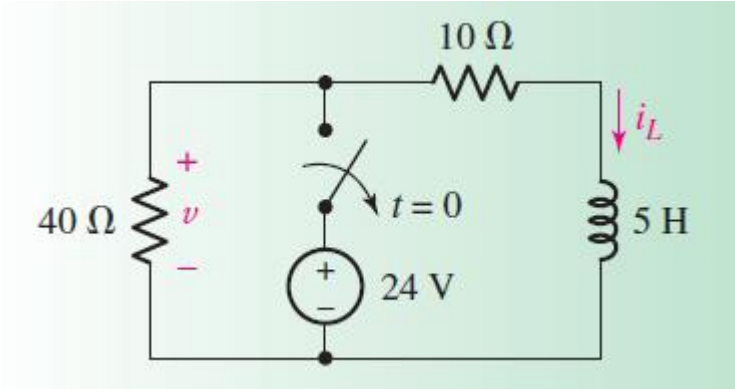

t <0

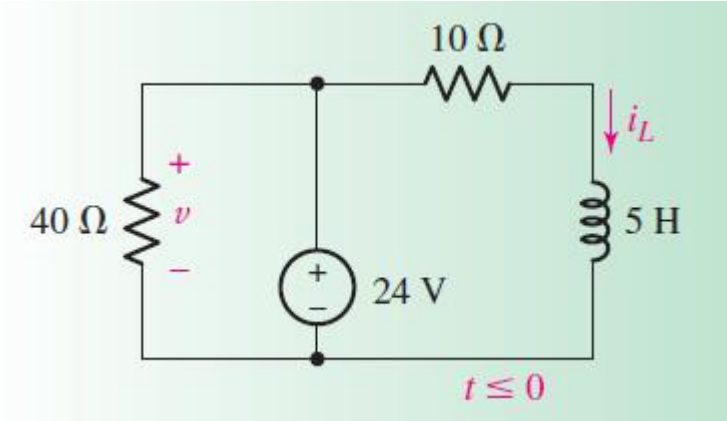

Ans: -12.99 V

t>=0

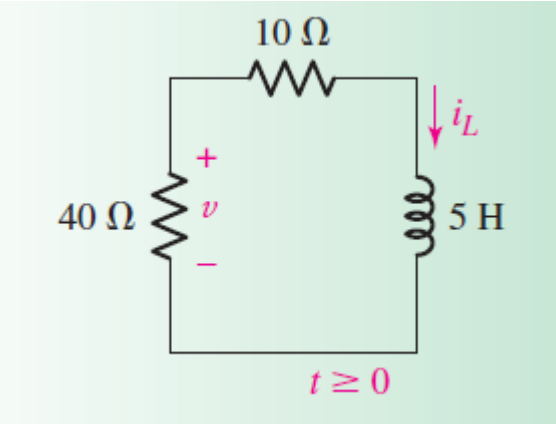

Example - natural response

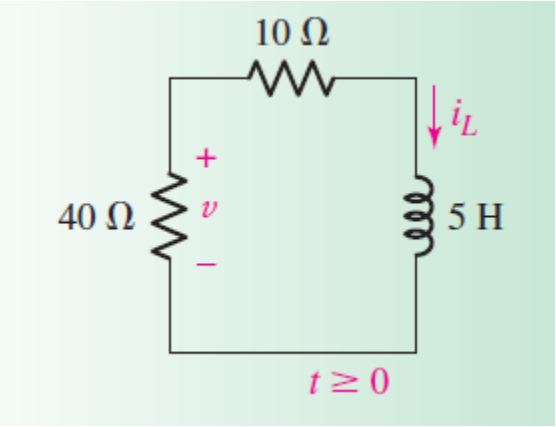

Energy dissipation

- $p_R = i^2 R = I_0^2 R e^{-\frac{2Rt}{L}}$
- $w_R = \int_0^\infty p_R dt = \frac{1}{2} L I_0^2$
- Implies energy stored in the inductor is dissipated

Properties of the exponential response

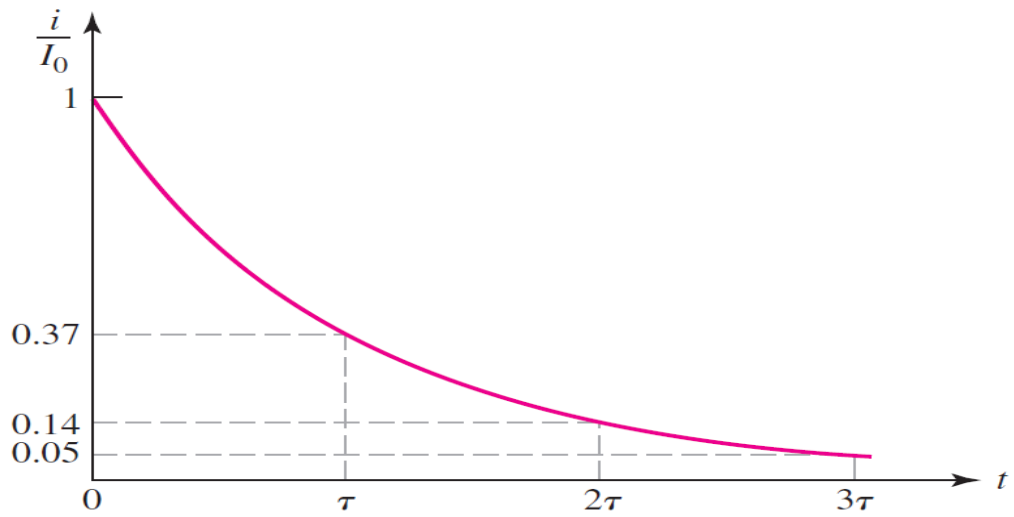

$$\frac{i}{I_0} = e^{-\frac{R}{L}t}$$

At $t = \frac{L}{R}$

$$\frac{i}{I_0} = e^{-1} = 0.3679$$

$\frac{L}{R}$ is called the time constant and denoted as τ

That means

$$i = I_0 e^{-\frac{t}{\tau}}$$

Natural response of a RC circuit

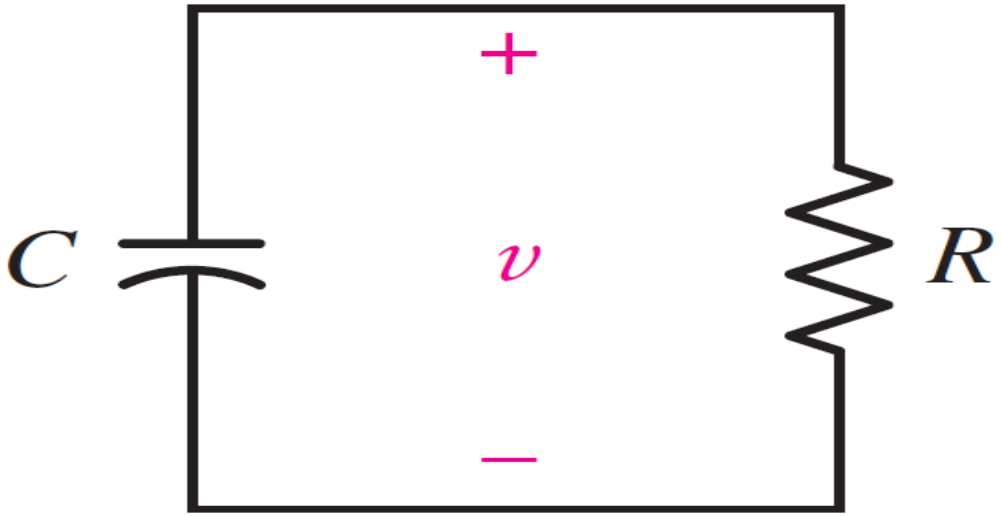

Initial condition: $v(0) = V_0$

$$C\frac{dv}{dt} + \frac{v}{R} = 0$$

Or

$$\frac{dv}{dt} + \frac{v}{RC} = 0$$

$$v(t) = V_0 e^{-\frac{t}{RC}}$$

Time constant $\tau = RC$

Example 8.3

For the circuit of Fig., find the voltage labeled v at t = 200 µs.

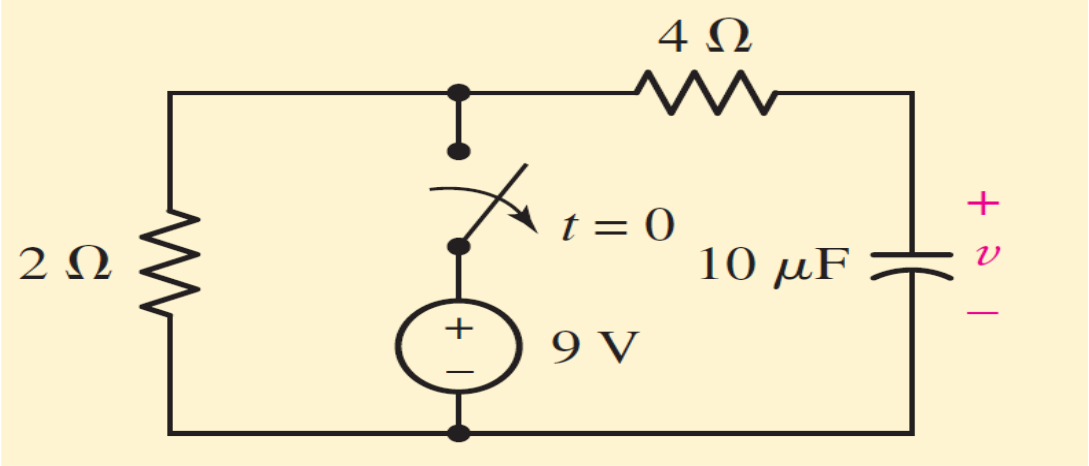

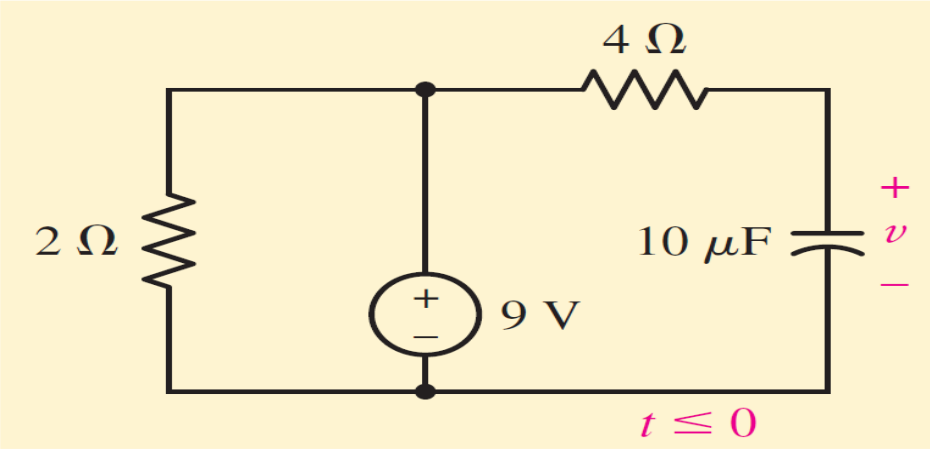

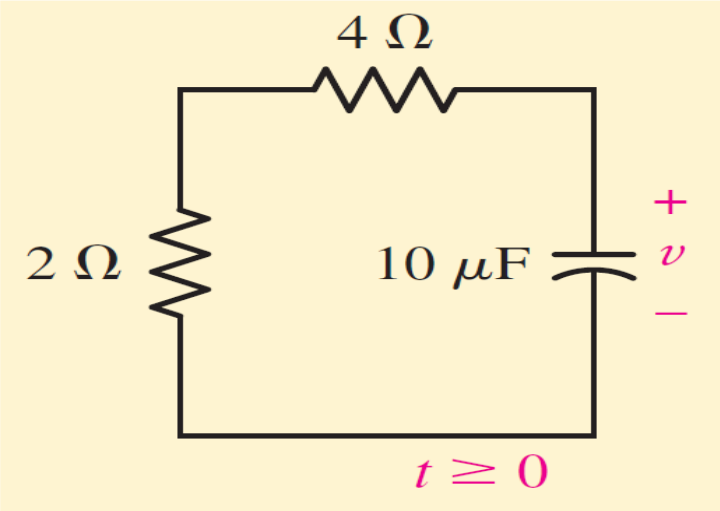

Ans: 321.06 mV

Example 8.3

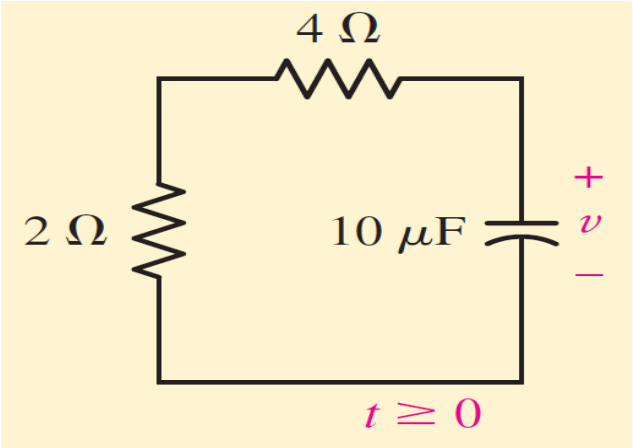

ECE113- Basic Electronics

Lecture 12: RL and RC circuits part 2

Dr. Sanat K Biswas, Assistant Professor

Office: B602, Research and Development Block

Email: sanat@iiitd.ac.in

INDRAPRASTHA INSTITUTE *of*
INFORMATION TECHNOLOGY
DELHI

Unit step function

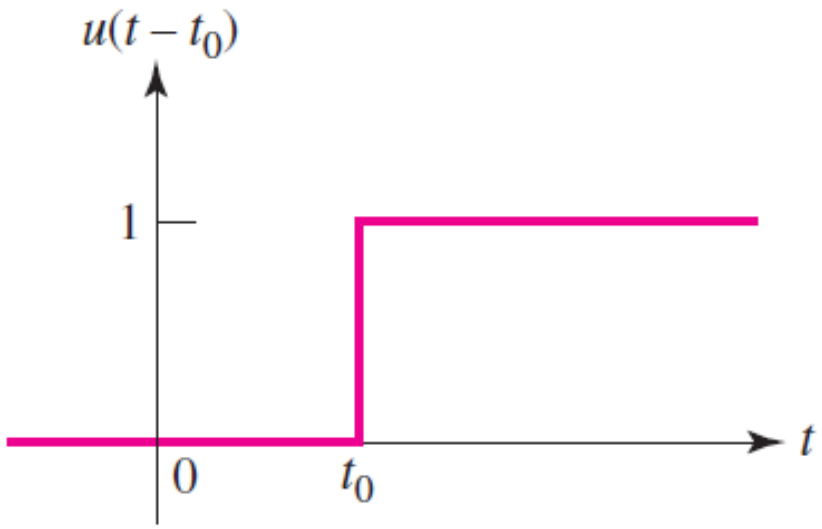

$$u(t - t_0) = \begin{cases} 0 & t < t_0 \\ 1 & t > t_0 \end{cases}$$

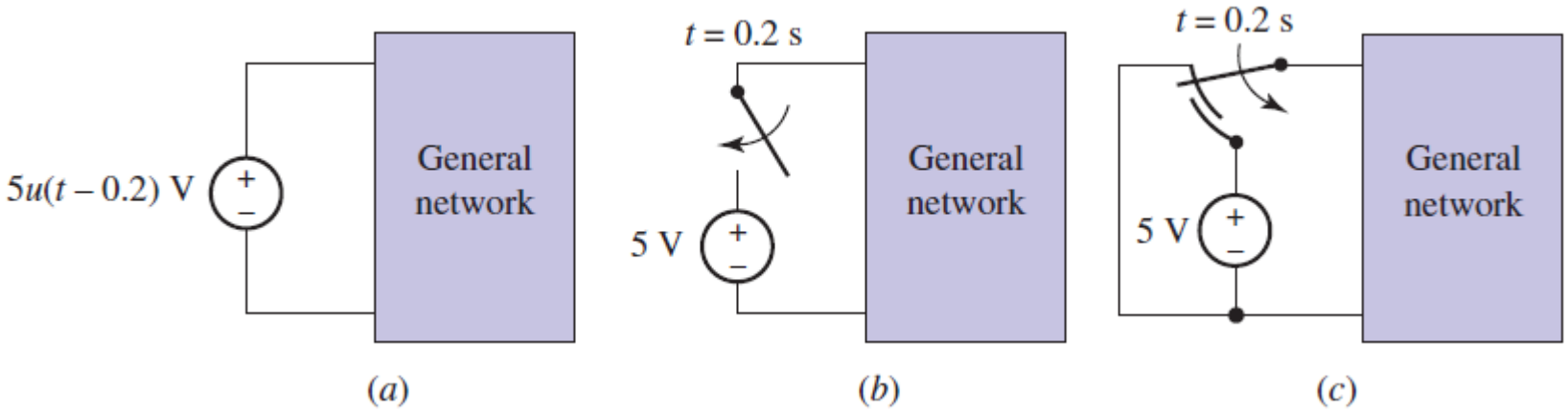

The Rectangular Pulse Function

$$v(t) = \begin{cases} 0 & t < t_0 \\ V_0 & t_0 < t < t_1 \\ 0 & t > t_1 \end{cases}$$

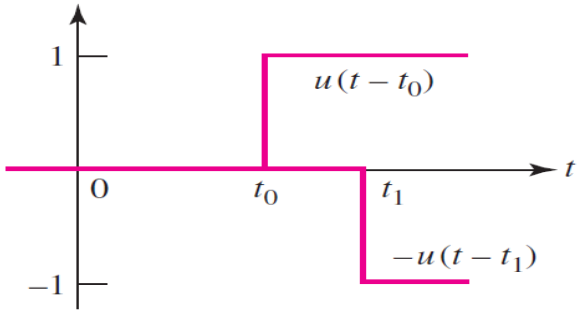

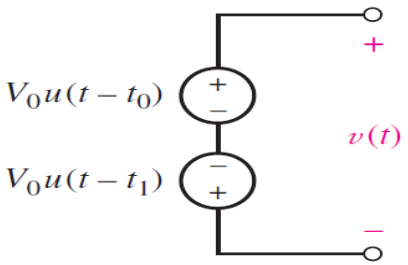

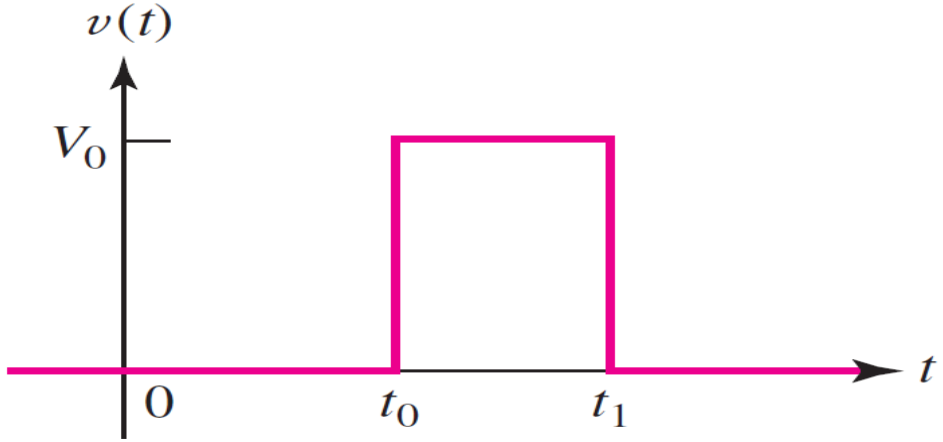

First order Circuits

- Combination of resistive elements and a capacitor or inductor
- ‘First-order’ refers to the order of the differential equation describing the circuit

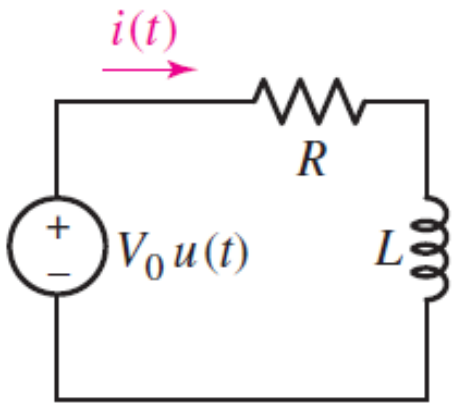

A driven RL circuit

$$L\frac{di}{dt} + Ri = V_0 u(t)$$

First order Circuits

- General form for first order, (linear) ordinary differential equation:

$$\frac{dx(t)}{dt} + ax(t) = f(t)$$

- x(t) is a circuit quantity (voltage, current)
- a is a constant, some function of the circuit elements
- $f(t)$ is a forcing function, usually the source voltage or current

First order Circuits

- Solution process:
  - Find the solution to the homogeneous equation
    - The solution is called the natural response (independent of the source applied)
    - A general solution has the form $x(t) = Ae^{-at}$
    - Often we write $x_n(t) = Ae^{-at}$
  - Look for a solution to the forced response
    - assume a forced response solution of the form $x_f(t)$
  - The complete solution is $x(t) = x_n(t) + x_f(t)$
  - Use initial conditions (i.e. x(0)) to determine constants

Complete response

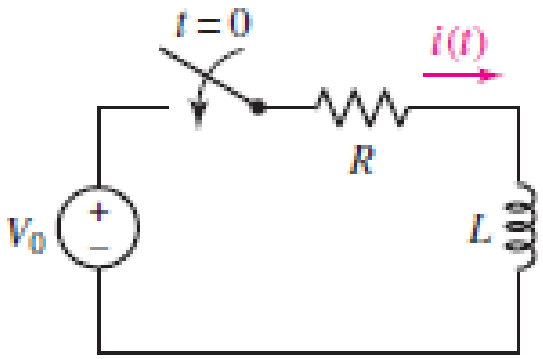

(a)

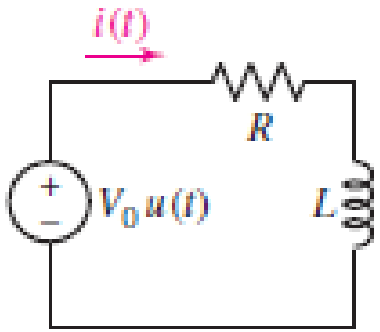

(b)

$$L\frac{di}{dt} + Ri = V_0 u(t)$$

$$i = \frac{V_0}{R} - \frac{V_0}{R} e^{-\frac{R}{L}t}$$

Complete response- General Approach

$$\frac{dx(t)}{dt} + Px(t) = Q$$

- For constant P and Q

$$x(t) = \frac{Q}{P} + Ae^{-Pt}$$

Forced response

Natural response

Intuitive understanding of responses

- Consider the previous forced RL circuit
- The circuit will eventually assume the forced response
- That means, After the natural response has died out, there can be no voltage across the inductor. Hence

$$i_f = \frac{V_0}{R}$$

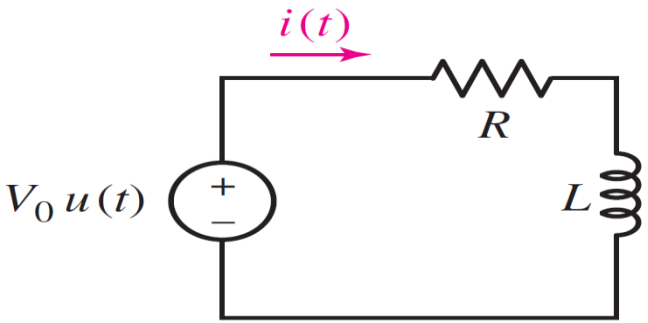

$$i = Ae^{-\frac{R}{L}t} + \frac{V_0}{R}$$

Intuitive understanding of responses

- The current is zero prior to t = 0, and it cannot change value instantaneously since it is the current flowing through an inductor. Thus, the current is zero immediately after t = 0

$$0 = A + \frac{V_0}{R}$$

$$i = \frac{V_0}{R}(1 - e^{-\frac{R}{L}t})$$

Characteristics of unit step response

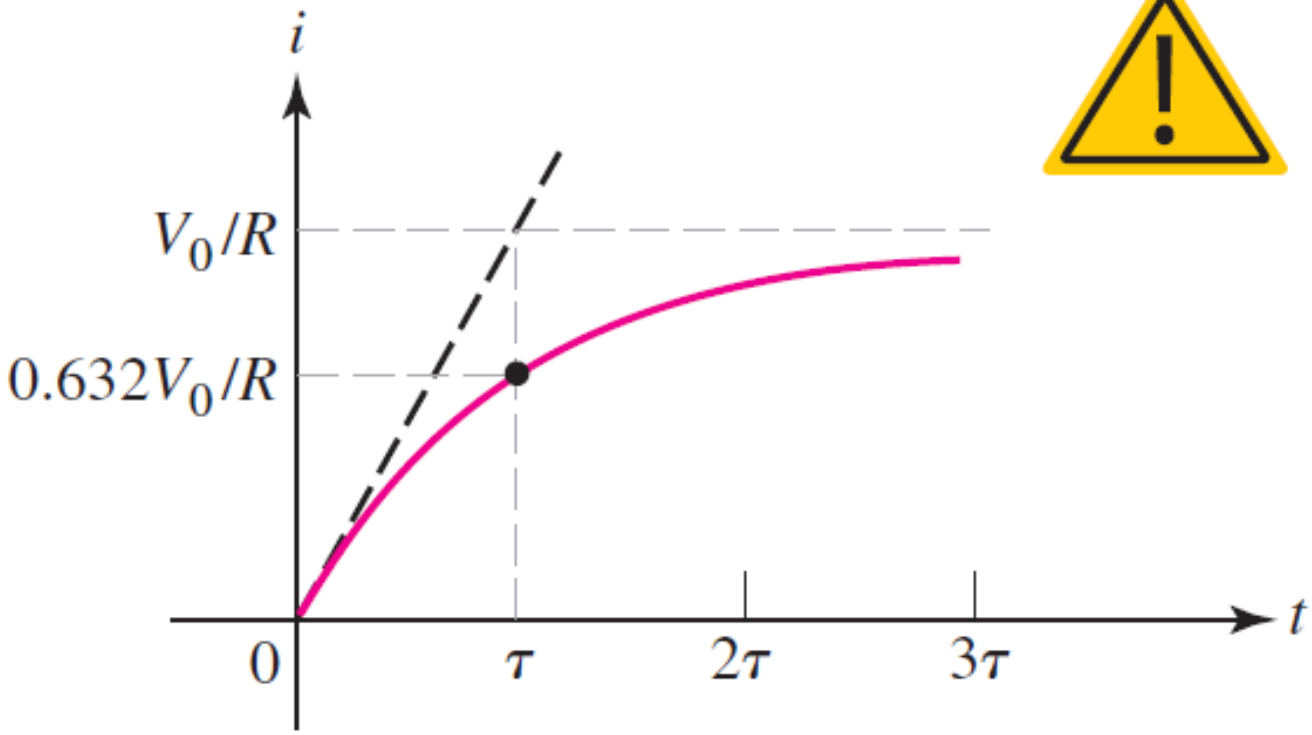

$$i = \frac{V_0}{R}(1 - e^{-Rt/L})$$

Example 8.7

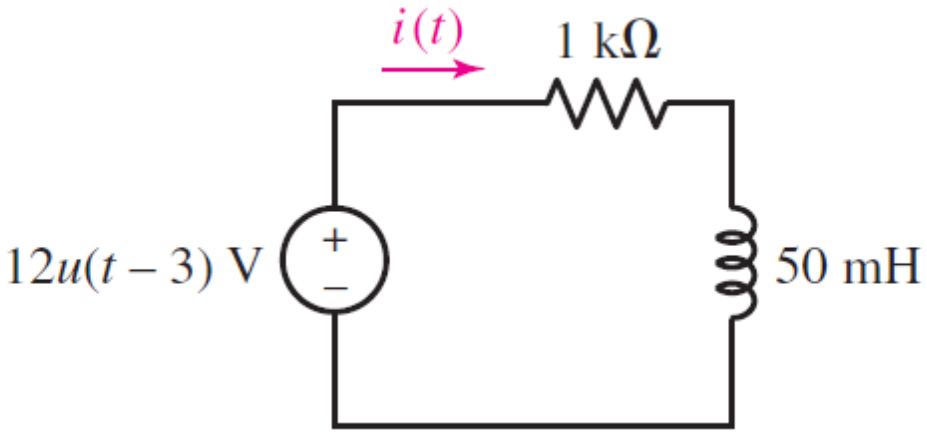

Find i(t) for $t = \infty, 3^-, 3^+, 100\mu s$ after the source changes value

Example 8.8

Determine i(t) for all values of time in the circuit

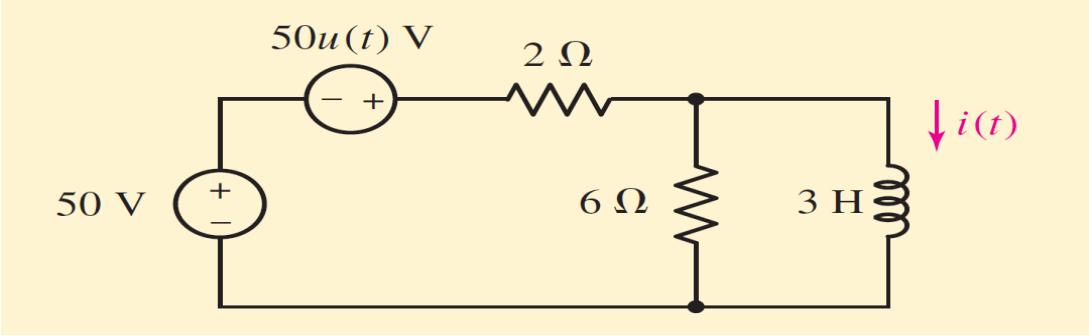

Example 8.9

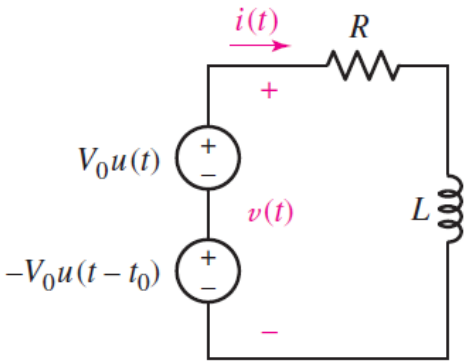

Find the current response in a simple series *RL* circuit when the forcing function is a rectangular voltage pulse of amplitude V_0 and duration t_0.

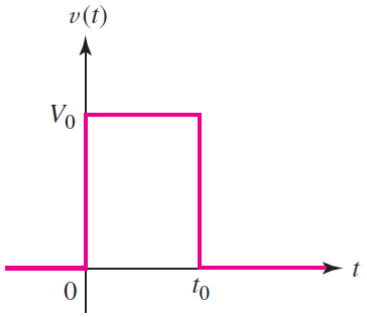

Example 8.9

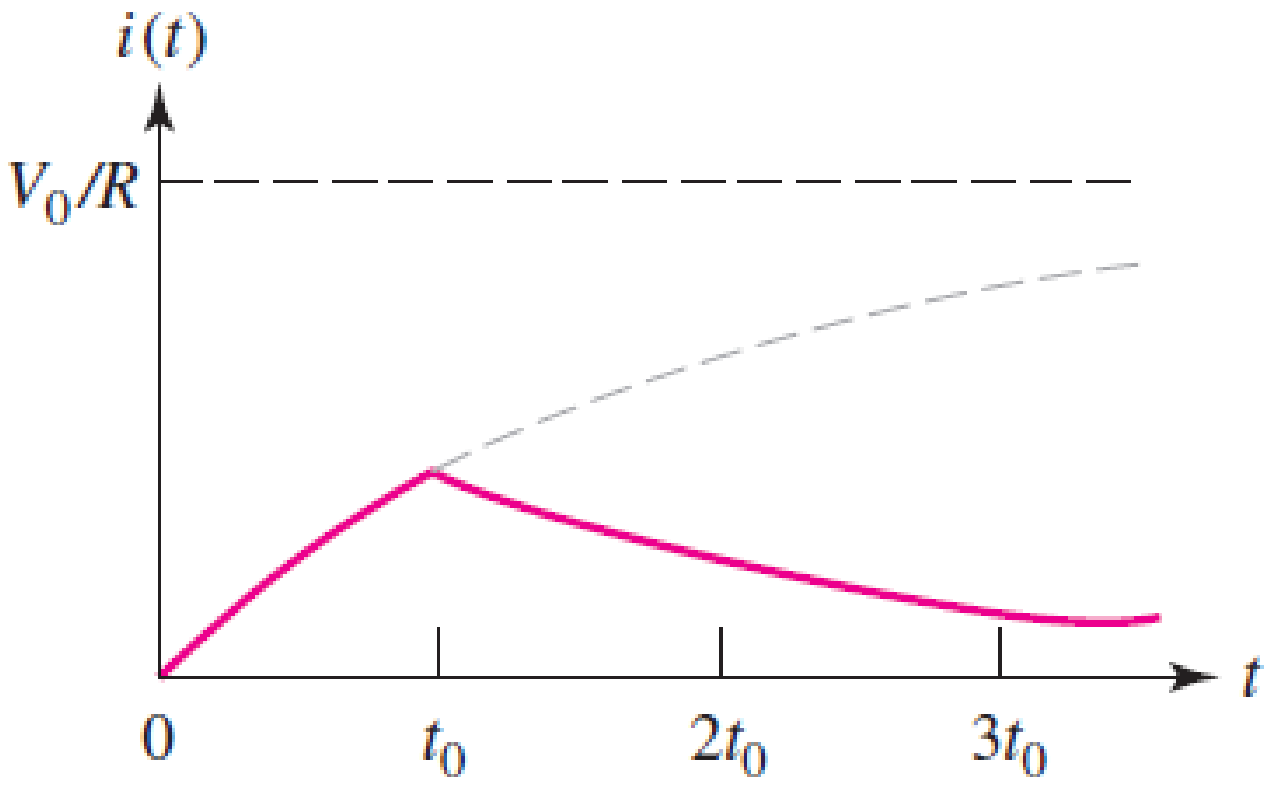

ECE113- Basic Electronics

Lecture 13: RLC circuits part 1

Dr. Sanat K Biswas, Assistant Professor

Office: B602, Research and Development Block

Email: sanat@iiitd.ac.in

INDRAPRASTHA INSTITUTE *of*
INFORMATION TECHNOLOGY
DELHI

Example 8.10

Find the capacitor voltage $v_C(t)$ and the current $i(t)$ in the 200 Ω resistor of Fig. 8.42 for all time.

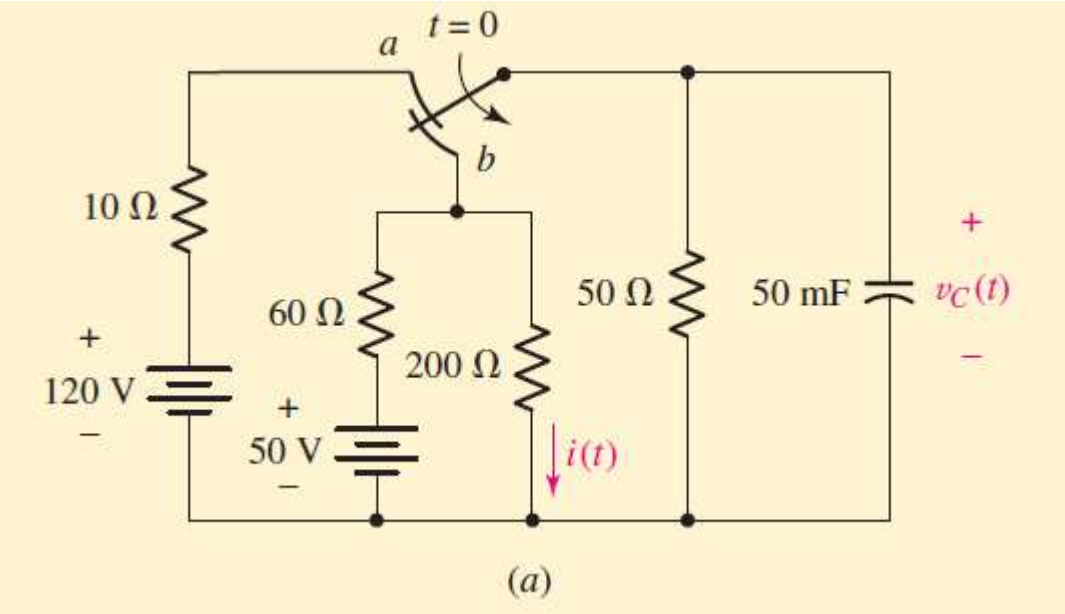

(a)

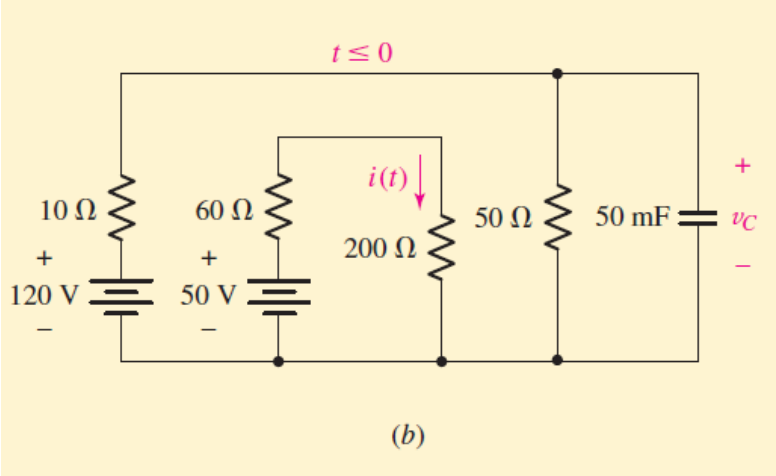

(b)

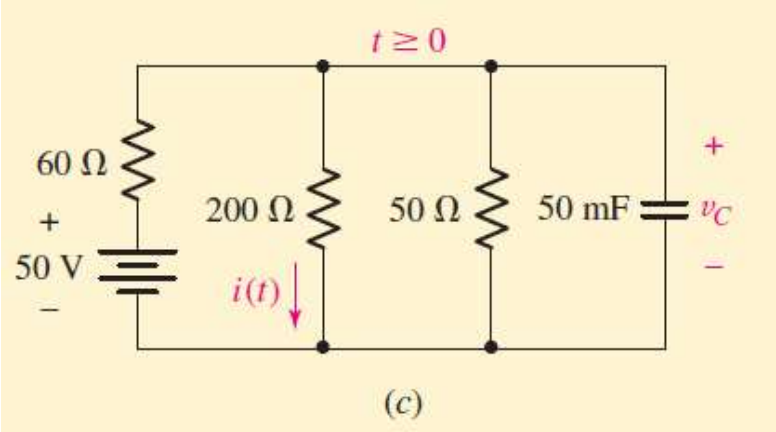

(c)

Example 8.10

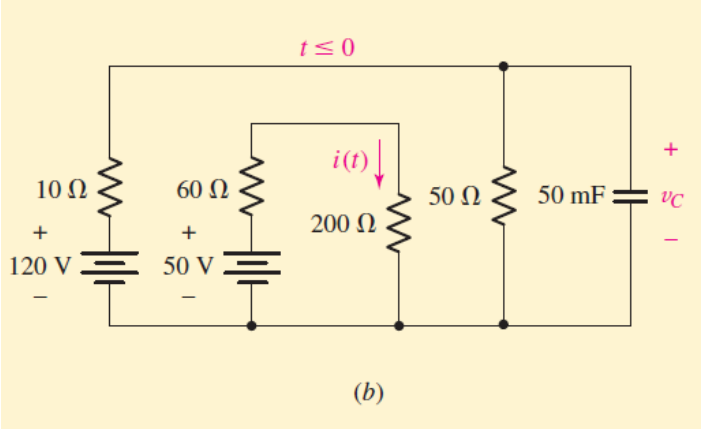

(b)

Example 8.10

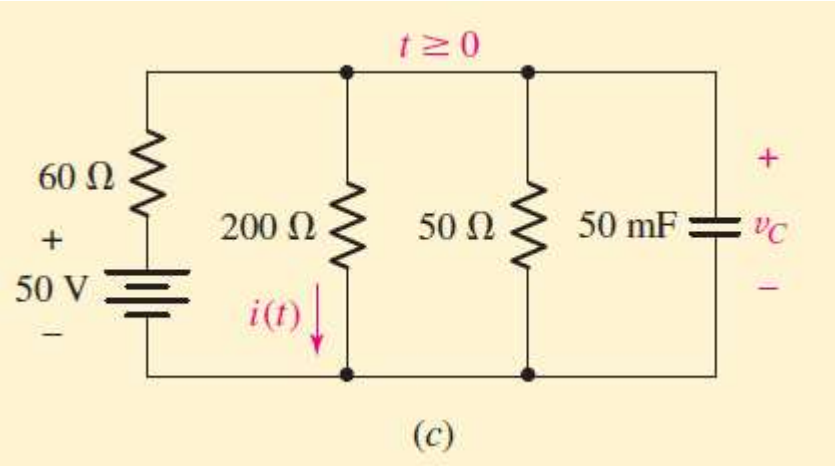

(c)

Example 8.10

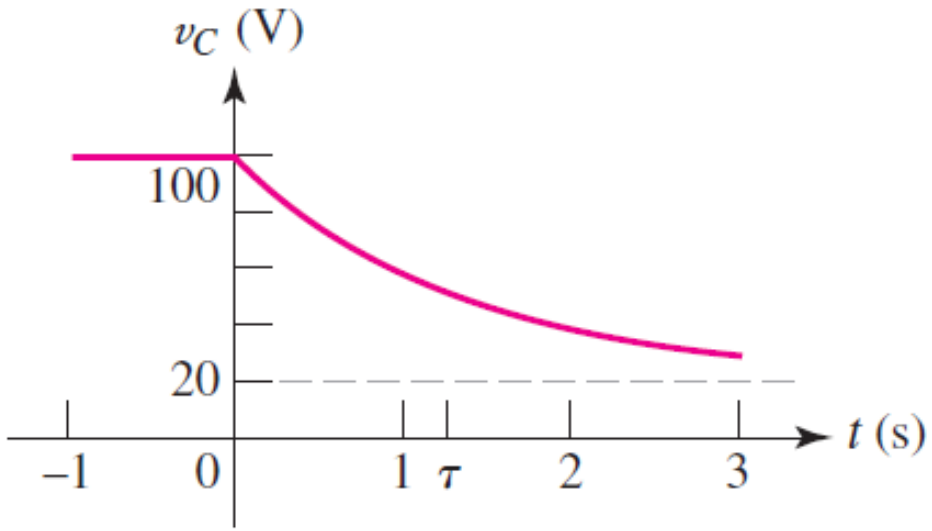

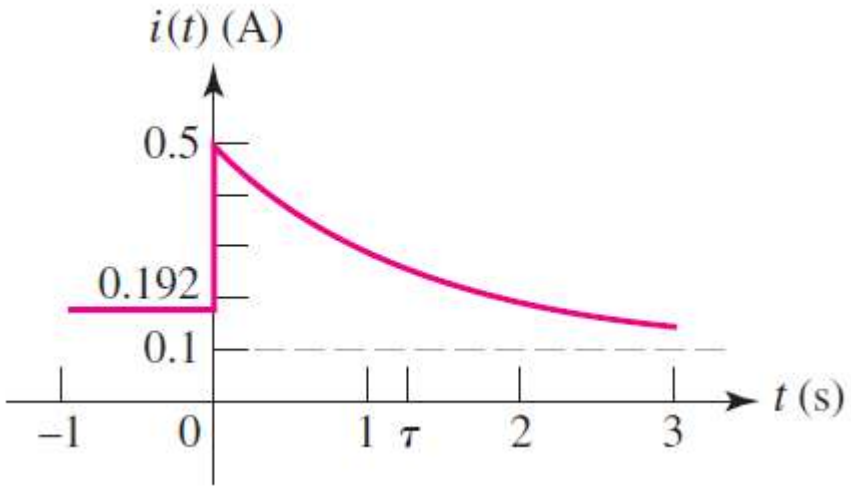

Parallel RLC circuit – Natural response

Sign of i(t0) is –ve because of initial assumption

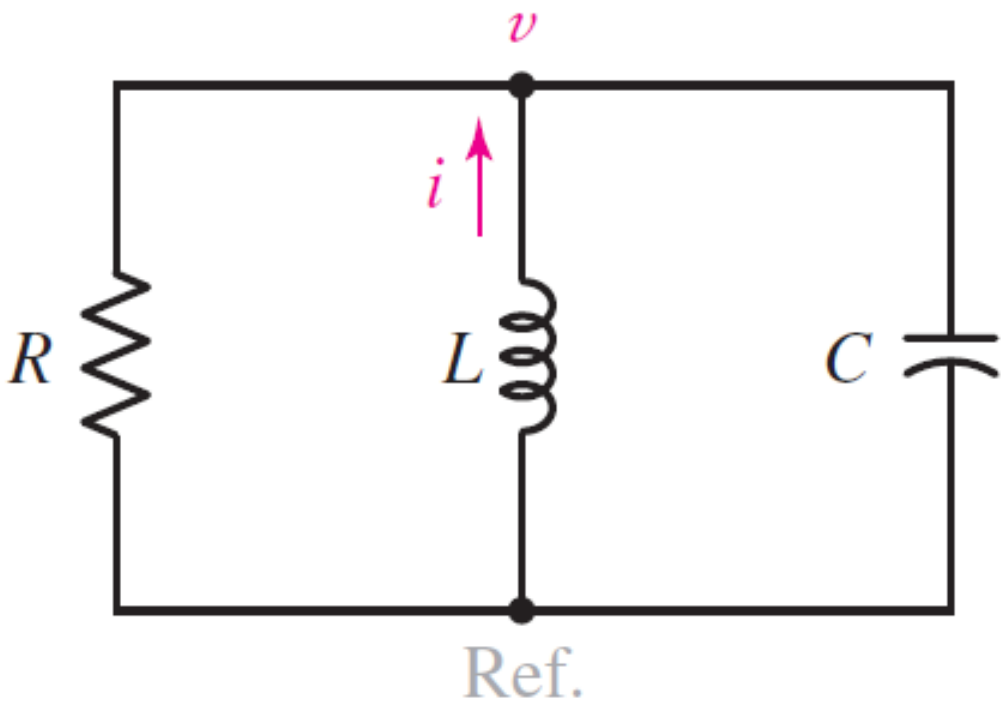

$$\frac{v}{R} + \frac{1}{L}\int_{t_0}^{t} v\,dt' - i(t_0) + C\frac{dv}{dt} = 0$$

Second order Circuits

$$C\frac{d^2v}{dt^2}+\frac{1}{R}\frac{dv}{dt}+\frac{1}{L}v=0$$

Initial condition is 0

- Combination of resistive elements and two energy storage elements (capacitor(s) and/or inductor(s))
- ‘Second-order’ refers to the order of the differential equation describing the circuit

Solution of a Linear Homogeneous 2nd order ordinary differential equation

- General form for second-order, (linear) ordinary differential equation:

$$\frac{d^2x}{dt^2} + a_1\frac{dx}{dt} + a_0x = f(t)$$

✓ x(t) is a circuit quantity (voltage, current)

✓ a0, a1 are constants, functions of the circuit elements

✓ f(t) is a forcing function, usually the source voltage or current

✓ For source free case: f(t) = 0

Solution of a Linear Homogeneous 2nd order ordinary differential equation

- This equation is often rewritten:

$$\frac{d^2x}{dt^2} + 2\alpha\frac{dx}{dt} + \omega_n^2 x = f(t)$$

$$\alpha = \frac{a_1}{2}$$

$$\omega_n = \sqrt{a_0}$$

  - ✓ α is called damping factor
  - ✓ ω_n is called the natural frequency
  - ✓ $\omega_d^2 = \omega_n^2 - \alpha^2$ is called the damped frequency

- Characteristic equation:

$$m^2 + 2\alpha m + \omega_n^2 = 0$$

  - ✓ Quadratic roots:

$$m_1, m_2 = \frac{-2\alpha \pm 2\sqrt{\alpha^2 - \omega_n^2}}{2} = -\alpha \pm j\omega_d$$

Solution of a Linear Homogeneous 2nd order ordinary differential equation

Solution process:

1. Find the solution to the homogeneous equation
   - The solution is called the natural response (independent of the source applied)
   - Has the form

$$x_n(t) = A_1 e^{m_1 t} + A_2 e^{m_2 t}$$

   - Nature depends on m_1 and m_2

Solution of a Linear Homogeneous 2nd order ordinary differential equation

- Case 1:
  - ✓ $\alpha > \omega_n, \sqrt{(\alpha^2 - \omega_n^2)} \Rightarrow m_1, m_2 \in R$, i.e. real distinct roots. This is called an **overdamped** case

$$x_n(t) = A_1 e^{(-\alpha+\omega_d)t} + A_2 e^{(-\alpha-\omega_d)t}$$

- Case 2:
  - ✓ $\alpha < \omega_n \Rightarrow m_1, m_2 \in C$, i.e. distinct complex roots. This is called an underdamped case

$$x_n(t) = e^{-\alpha t}(B_1 \cos \omega_d t + B_2 \sin \omega_d t)$$

- Case 3:
  - ✓ $\alpha = 0 \Rightarrow m_1, m_2 = \pm j\omega_d = \pm j\omega_n$, i.e. equal complex roots. Solution is pure sinusoidal. It is an **undamped case**

$$x_n(t) = (B_1 \cos \omega_d t + B_2 \sin \omega_d t)$$

- Case 4:
  - ✓ $\alpha = \omega_n \Rightarrow \alpha^2 - \omega_n^2 = 0, m_1, m_2 \in R$, i.e. coincidental roots. This is a **critically damped** case

$$x_n(t) = (A_1 + A_2)e^{-\alpha t}$$

Solution of a Linear Homogeneous 2nd order ordinary differential equation

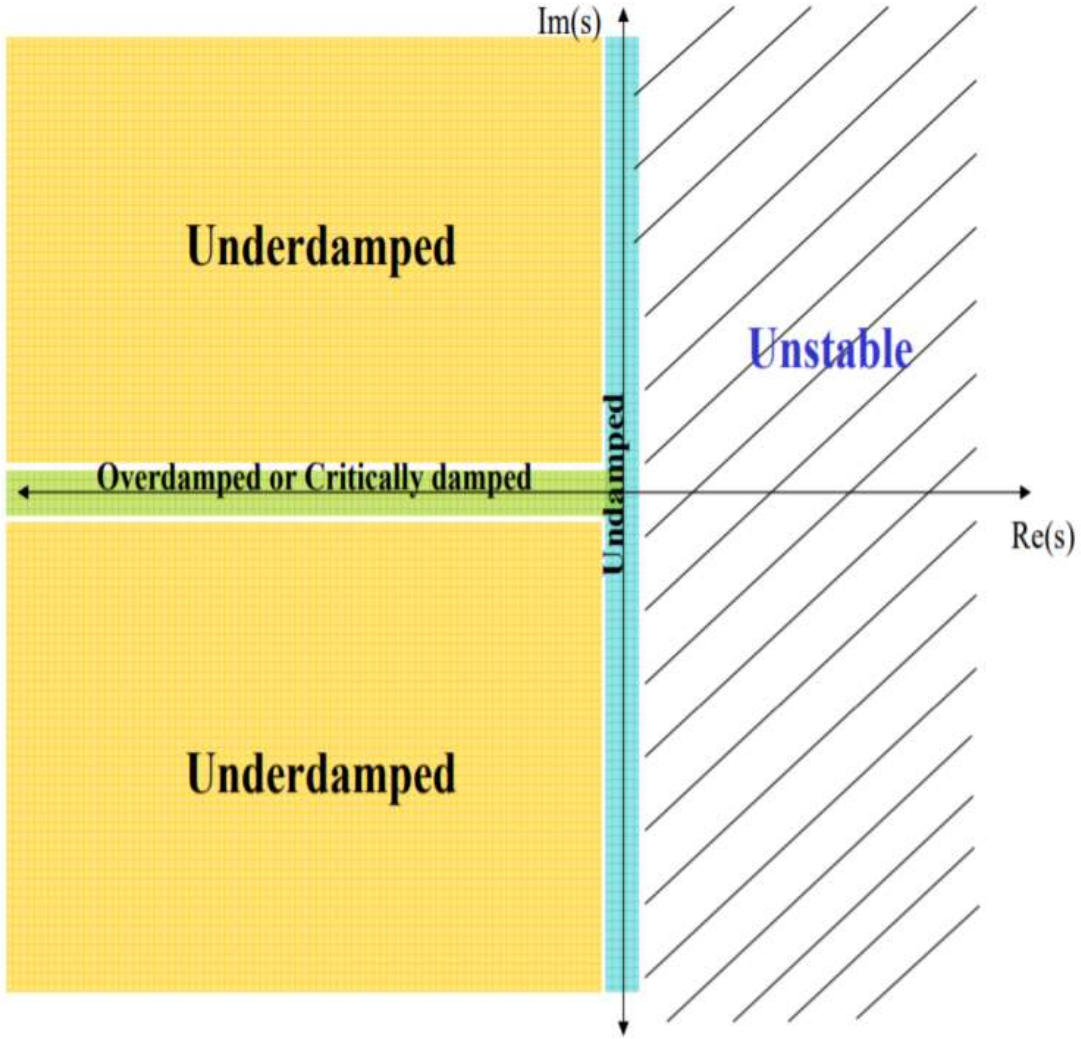

Solution of a Linear Homogeneous 2nd order ordinary differential equation

2. Look for a solution to the forced response
3. The complete solution is

$$x(t) = x_n(t) + x_f(t)$$

4. Use initial conditions to determine the constants.

Back to the parallel RLC circuit

$$C\frac{d^2v}{dt^2}+\frac{1}{R}\frac{dv}{dt}+\frac{1}{L}v=0$$

- Characteristic equation?
- m_1, m_2?
- $\omega_n, \alpha, \omega_d$?

Example 9.1

Consider a parallel RLC circuit having an inductance of 10 mH and a capacitance of 100 µF. Determine the resistor values that would lead to overdamped and underdamped responses.

Parallel RLC circuit

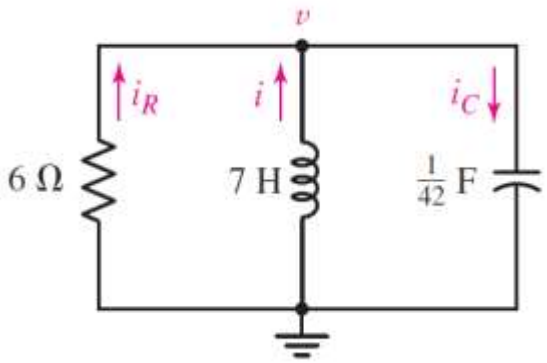

V(0) = 0
i(0) = 10 A

Find v(t)

Example 9.2

Find an expression for *vC*(*t*) valid for *t* > 0 in the circuit

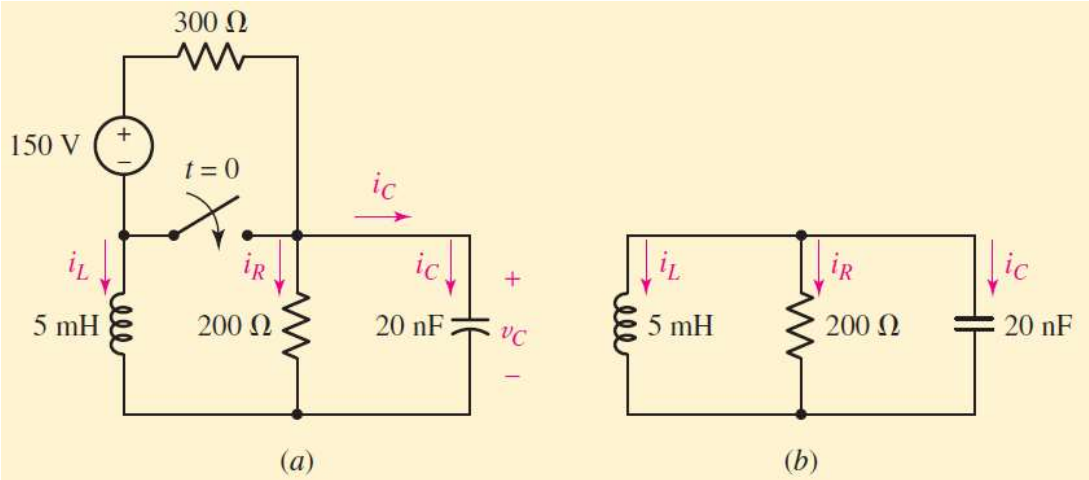

ECE113- Basic Electronics

Lecture 15: RLC circuits part 2

Dr. Sanat K Biswas, Assistant Professor

Office: B602, Research and Development Block

Email: sanat@iiitd.ac.in

INDRAPRASTHA INSTITUTE *of*
INFORMATION TECHNOLOGY
DELHI

Example 9.3

The circuit of Fig. a reduces to a simple parallel RLC circuit after t = 0. Determine an expression for the resistor current iR valid for all time.

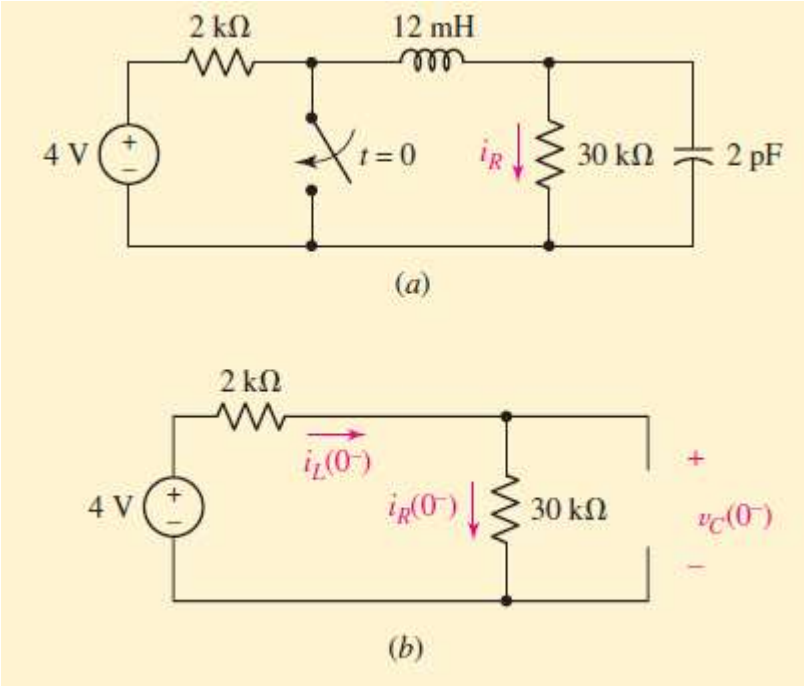

Graphical representation of response

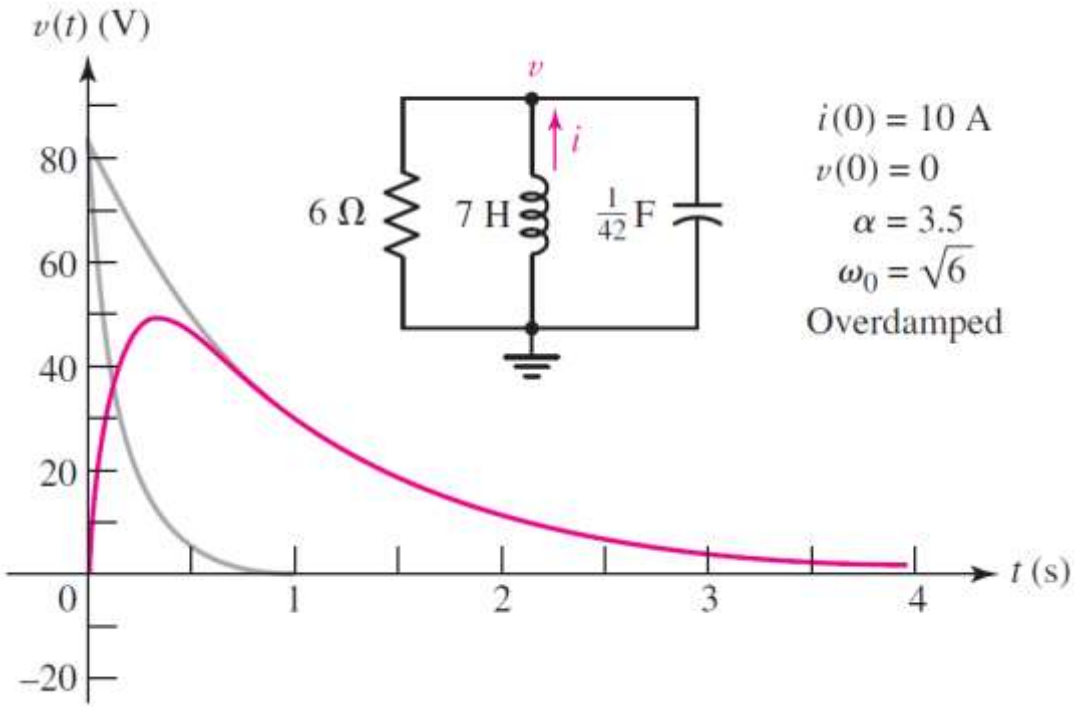

Settling time

- Time required to reduce the response magnitude to less than 1% of the maximum response magnitude is called the settling time.
- For the previous problem, find maximum V, time when V is max and the settling time.

Settling time Example

For *t* > 0, the capacitor current of a certain source-free parallel *RLC* circuit is given by $i_c(t) = 2e^{-2t} - 4e^{-t}$ A. Sketch the current in the range 0 < *t* < 5 s, and determine the settling time.

Settling time Example

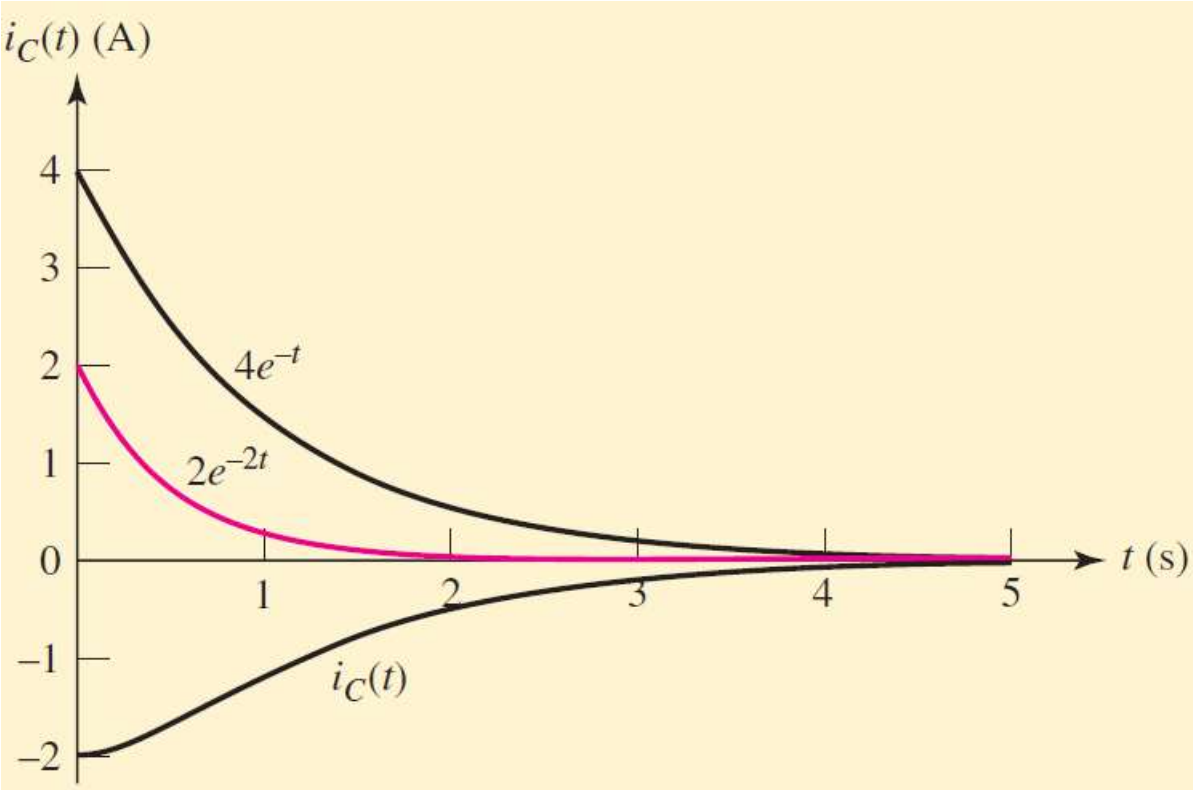

Critically Damped Parallel RLC

$$LC = 4R^2C^2$$
$$L = 4R^2C$$

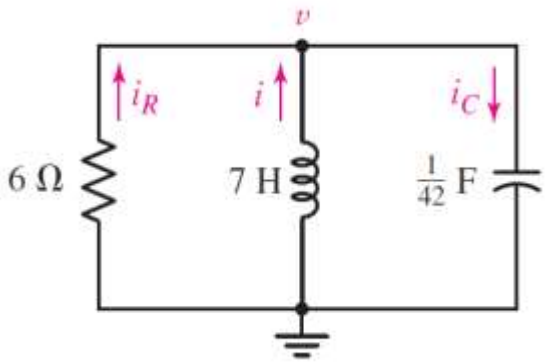

V(0) = 0
i(0) = 10 A

Find a resistance for which this circuit
Response will be critically damped

Critically Damped Parallel RLC

Critically Damped Parallel RLC

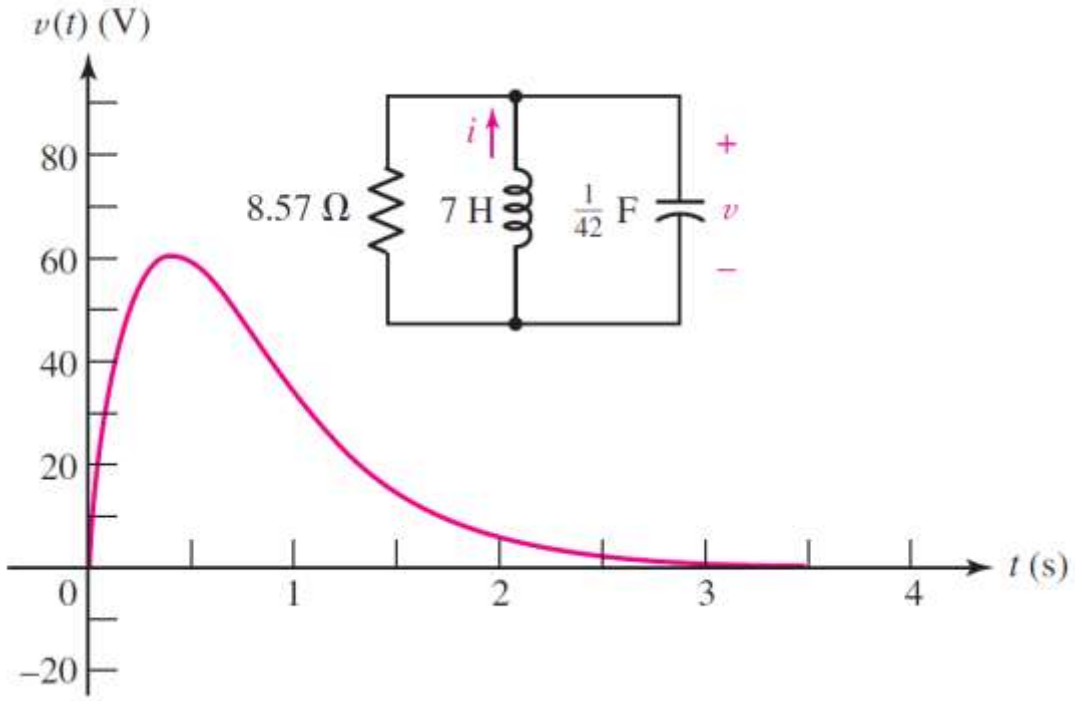

ECE113 – Basic Electronics

Lecture 16: RLC circuits part 3

Dr. Sanat K Biswas, Assistant Professor

Office: B602, Research and Development Block

Email: sanat@iiitd.ac.in

INDRAPRASTHA INSTITUTE *of*
INFORMATION TECHNOLOGY
DELHI

Undamped parallel RLC Circuits

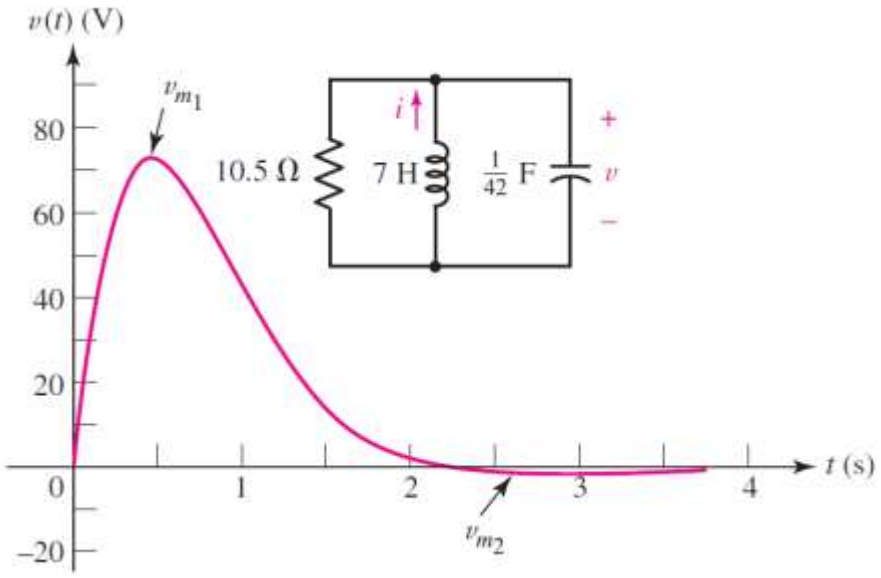

Effect of resistance

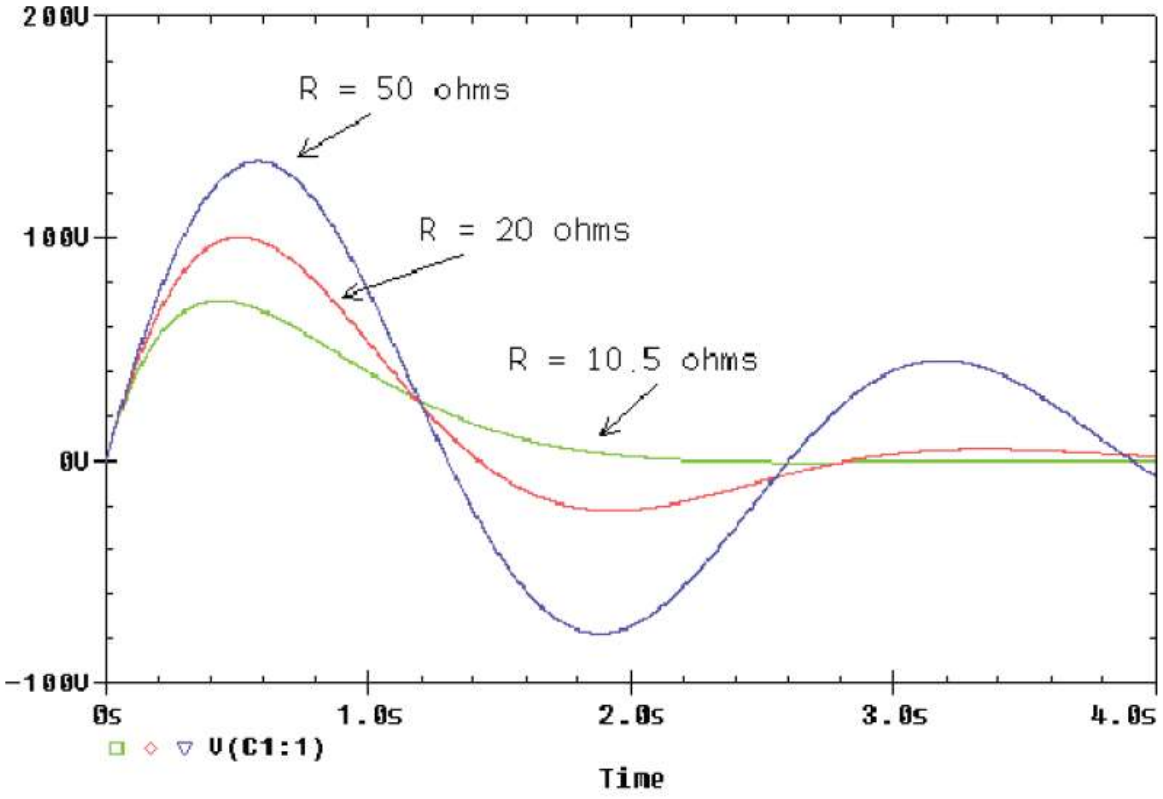

Series RLC

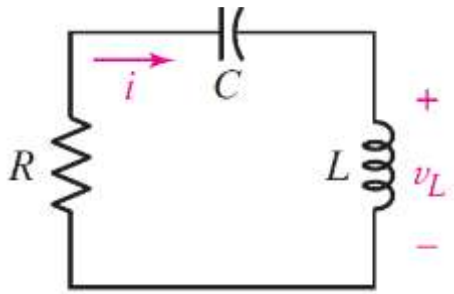

TABLE **9.1** Summary of Relevant Equations for Source-Free *RLC* Circuits

Type	Condition	Criteria	α	ω_0	Response
Parallel Series	Overdamped	$\alpha > \omega_0$	$\frac{1}{2RC}$ $\frac{R}{2L}$	$\frac{1}{\sqrt{LC}}$	$A_1 e^{s_1 t} + A_2 e^{s_2 t}$, where $s_{1,2} = -\alpha \pm \sqrt{\alpha^2 - \omega^2}$
Parallel Series	Critically damped	$\alpha = \omega_0$	$\frac{1}{2RC}$ $\frac{R}{2L}$	$\frac{1}{\sqrt{LC}}$	$e^{-\alpha t}(A_1 t + A_2)$
Parallel Series	Underdamped	$\alpha < \omega_0$	$\frac{1}{2RC}$ $\frac{R}{2L}$	$\frac{1}{\sqrt{LC}}$	$e^{-\alpha t}(B_1 \cos \omega_d t + B_2 \sin \omega_d t)$, where $\omega_d = \sqrt{\omega_0^2 - \alpha^2}$

Example 9.10

Determine the initial conditions in the circuit of the Fig., and also find values at t = 0+ for the first derivatives of i_L and v_C. Then find $v_C(t)$

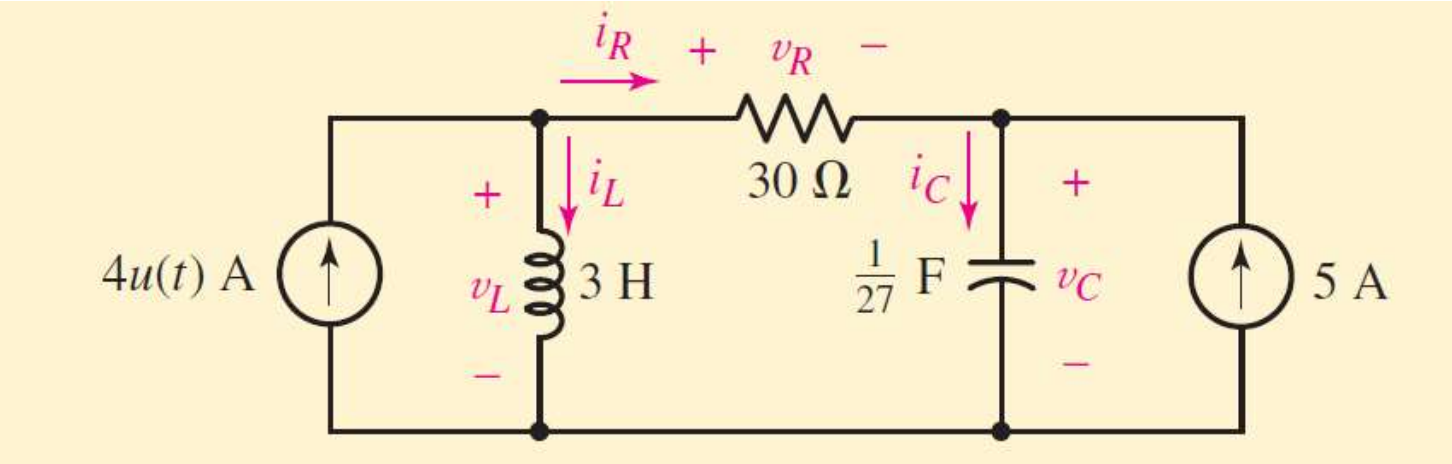

At t(0-)

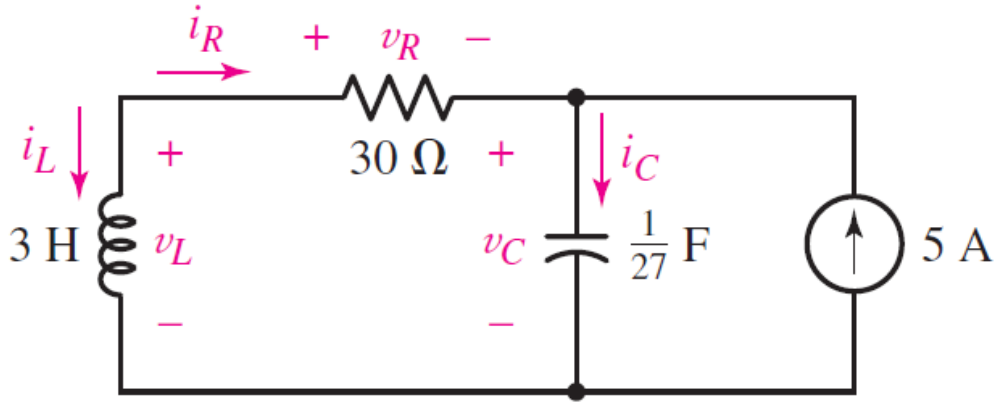

At t(0+)

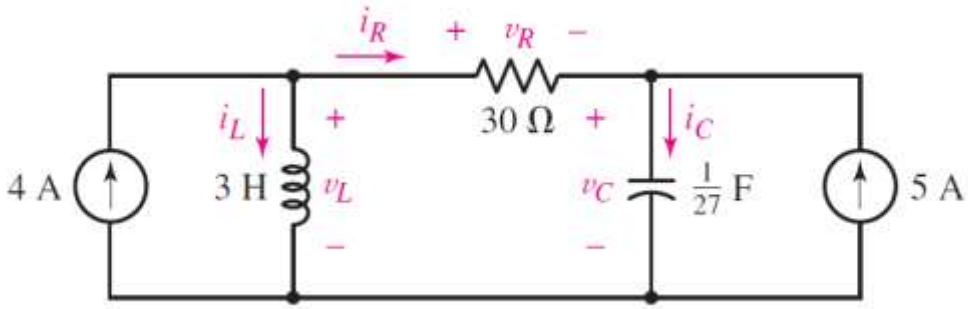

Loss-less LC

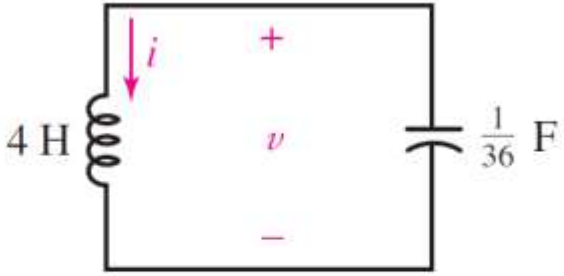

FIGURE 9.34 This circuit is lossless, and it provides the undamped response $v = 2 \sin 3t$ V, if $v(0) = 0$ and $i(0) = -\frac{1}{6}$ A.

ECE 113- Basic Electronics

Lecture 17: AC analysis

Dr. Sanat K Biswas, Assistant Professor

Office: B602, Research and Development Block

Email: sanat@iiitd.ac.in

INDRAPRASTHA INSTITUTE *of*
INFORMATION TECHNOLOGY
DELHI

Sinusoidal input

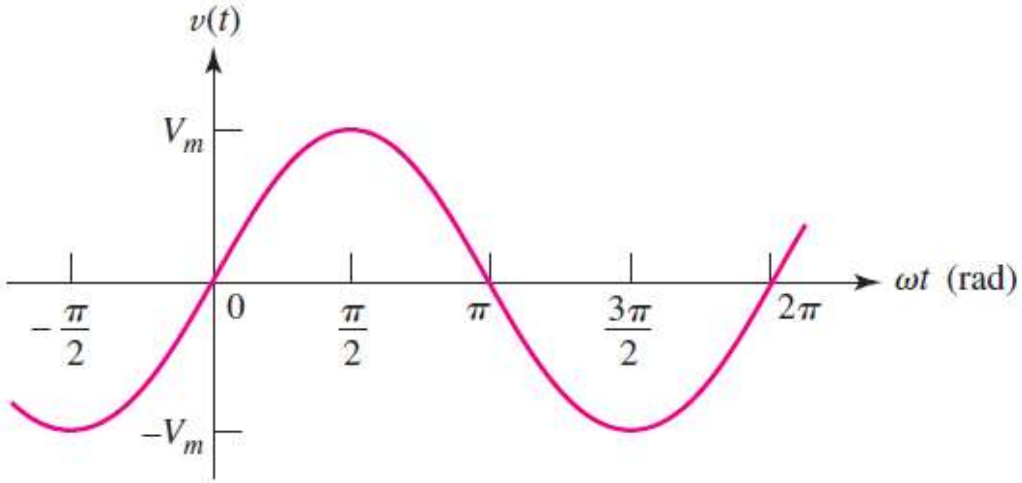

Lead and Lag

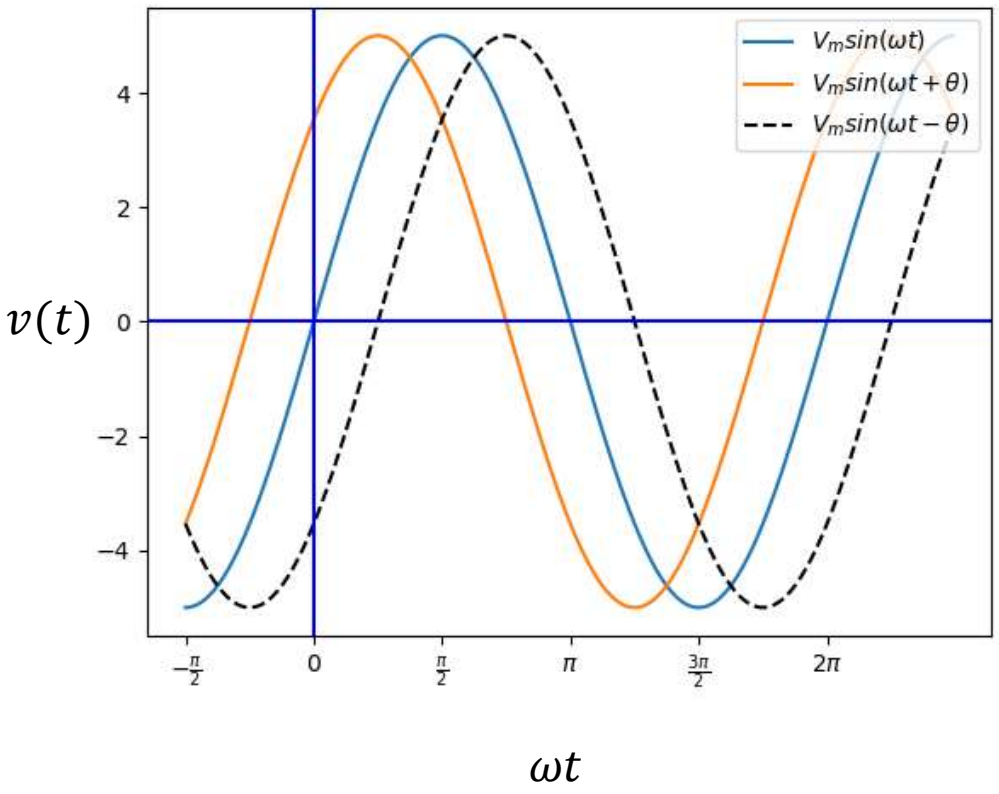
$V_m sin(\omega t)$
$V_m sin(\omega t + \theta)$
$V_m sin(\omega t - \theta)$
$v(t)$
ωt

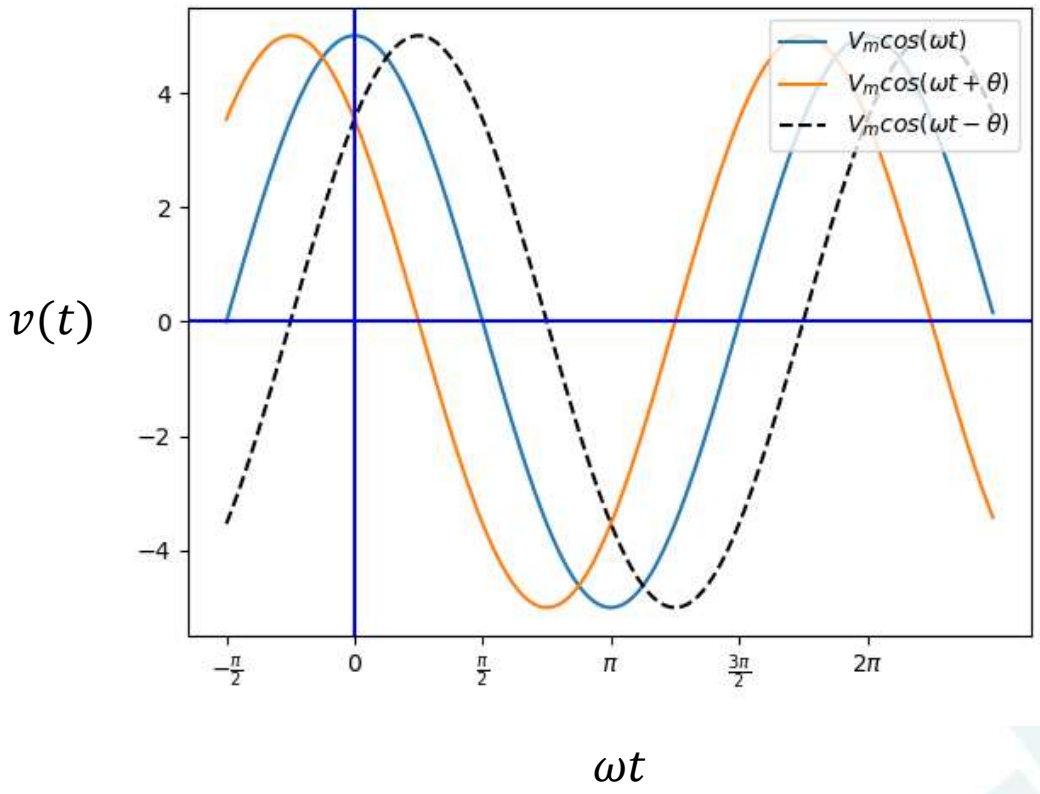
$V_m cos(\omega t)$
$V_m cos(\omega t + \theta)$
$V_m cos(\omega t - \theta)$
$v(t)$
ωt

Steady State response

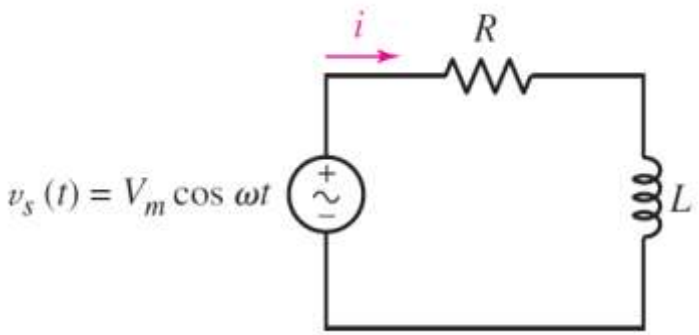

Complex forcing function

- Simplifies the analysis process
- An algebraic alternative to differential equation
- Superposition principle applies: which implies, real part of the complex response is the real response and the imaginary part is the imaginary response

Phasor Notation

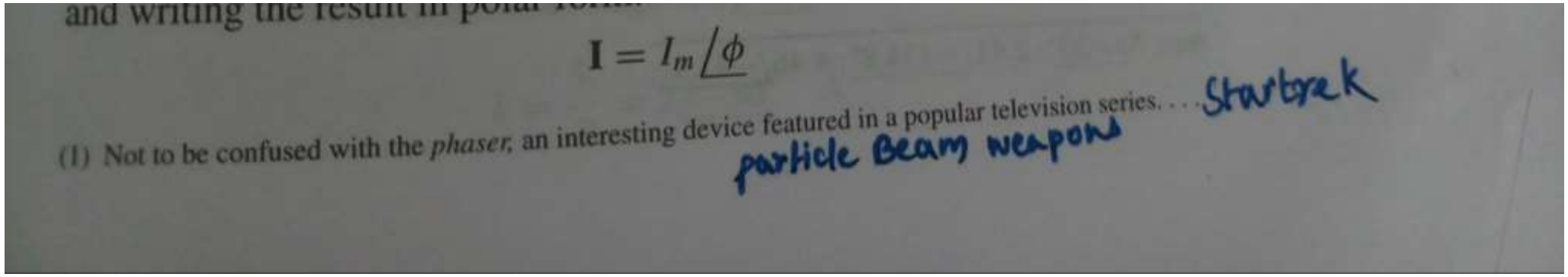

and writing the result in polar form

$$\mathbf{I} = I_m \angle \phi$$

(1) Not to be confused with the *phaser*, an interesting device featured in a popular television series. . . . Startrek

particle Beam weapons

Phasor notation

- $\cos \omega t$ or $\sin \omega t$ term does not change
- $e^{j\omega t}$ term cancels out in the intermediate step of the analysis
- Magnitude and phase are of interest
- Phasor notation shortens the analysis by skipping the ωt term (it is always there but we will be requiring it only at the end to provide the real solution)

Phasor notation

$$i(t) = I_m \cos(\omega t + \phi)$$

$$i(t) = \mathrm{Re}\{I_m e^{j(\omega t + \phi)}\}$$

$$\mathbf{I} = I_m e^{j\phi}$$

$$\mathbf{I} = I_m \underline{/\phi}$$

Impedance

- Ratio of phasor voltage and current
- It is a complex quantity
- The imaginary part is called reactance
- Reactance part comes due to the energy storage elements (L/C)
- Inverse of Impedance is admittance
- Series and parallel combination follows same formulation of resistance
- Phasor notation and concept of impedance eventually leads to simple analysis of Ac response (No need to solve ODE, apply KCL, KVL, voltage division, current division etc)

ECE113- Basic Electronics

Lecture 18: AC analysis

Dr. Sanat K Biswas, Assistant Professor

Office: B602, Research and Development Block

Email: sanat@iiitd.ac.in

INDRAPRASTHA INSTITUTE *of*
INFORMATION TECHNOLOGY
DELHI

Impedance

Example 10.6

Determine the equivalent impedance of the network shown in The Fig, given an operating frequency of 5 rad/s.

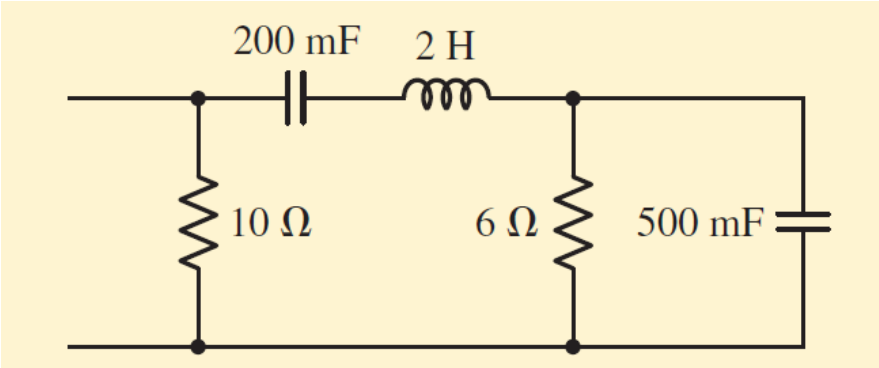

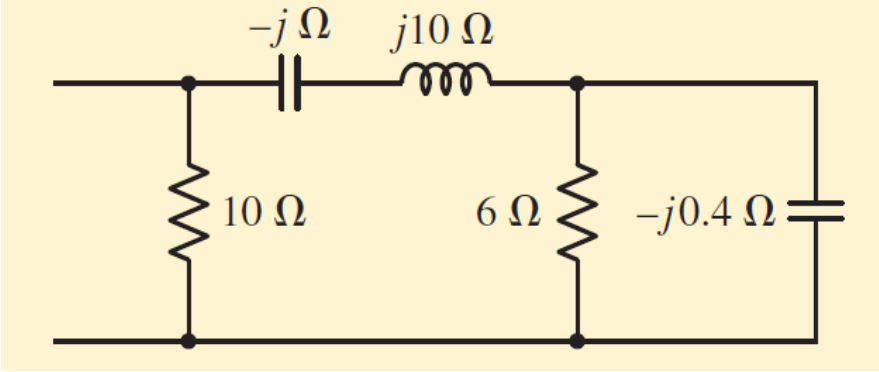

Example 10.6

Example 10.7

Find the current i_L in the circuit shown in the fig. , if the transients have already died out.

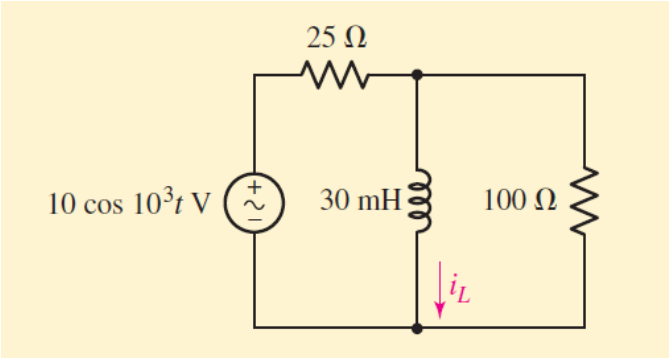

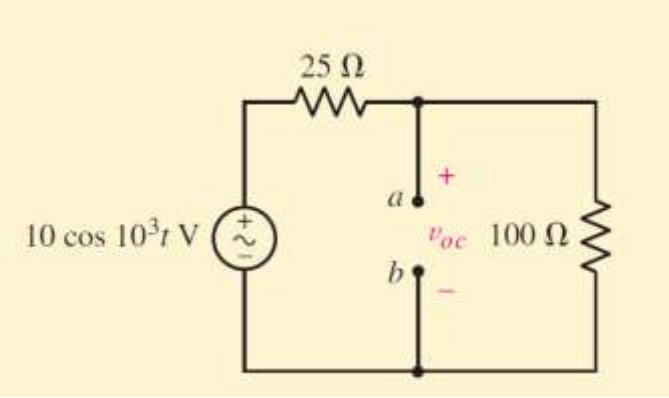

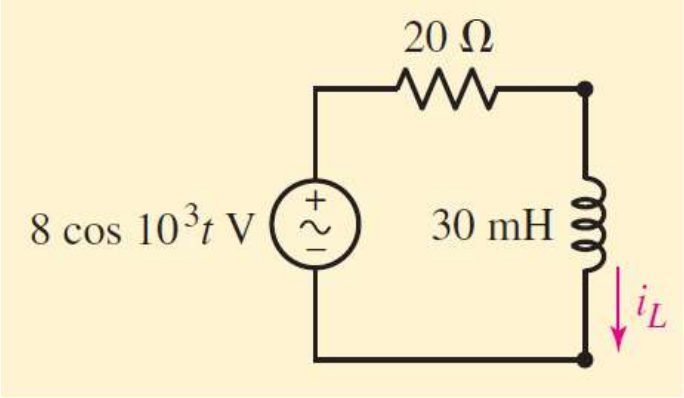

Example 10.7

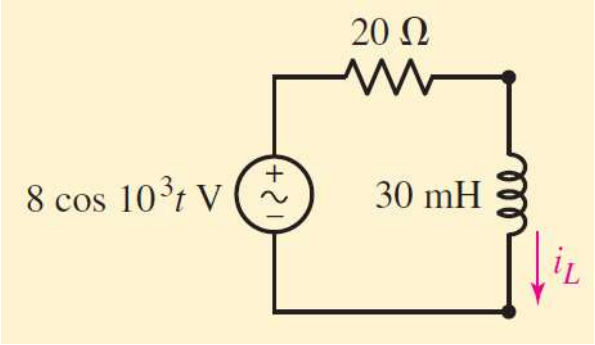

Example 10.8

Find the time-domain node voltages *v*1(*t*) and *v*2(*t*) in the circuit shown in the Fig

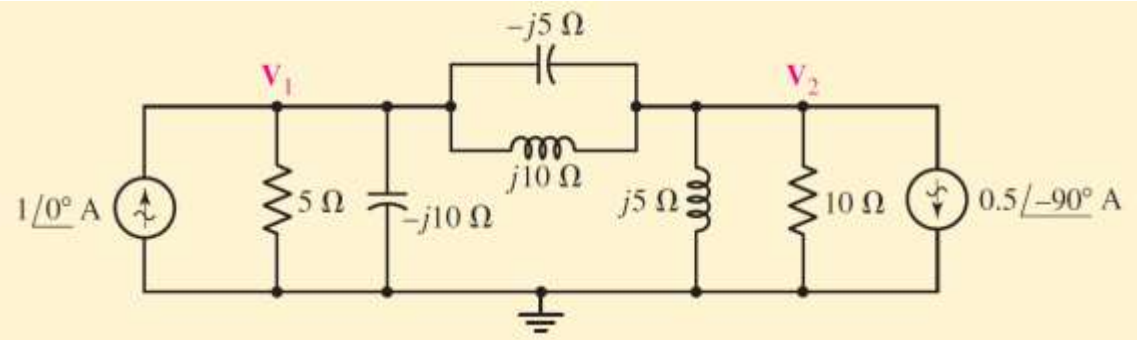

Example 10.9

Obtain expressions for the time-domain currents *i*1 and *i*2 in the circuit given as the Fig

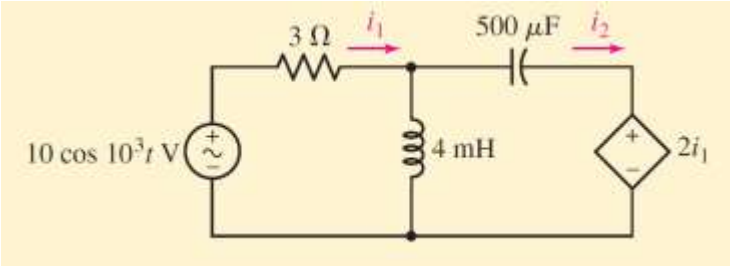

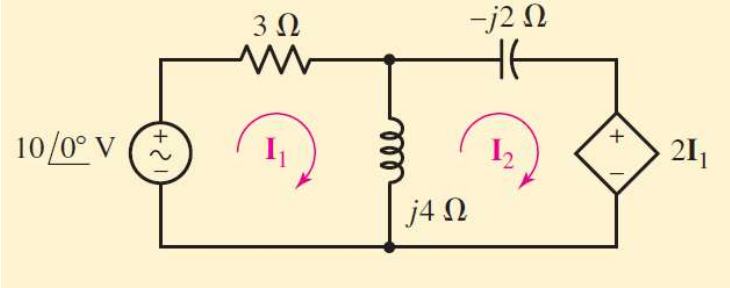

Example 10.9

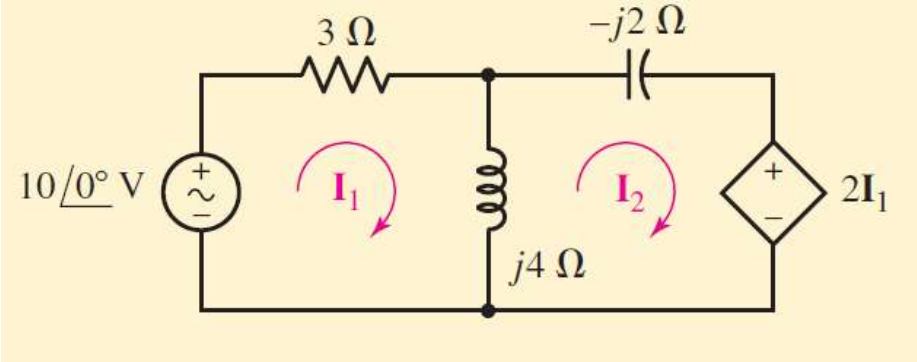

Phasor diagram

- A sketch in the complex plane showing the relationship of the phasor voltage and current
- Can be drawn using rectangular or polar co-ordinates

Example:

V1 = 6+j8

Phasor diagram

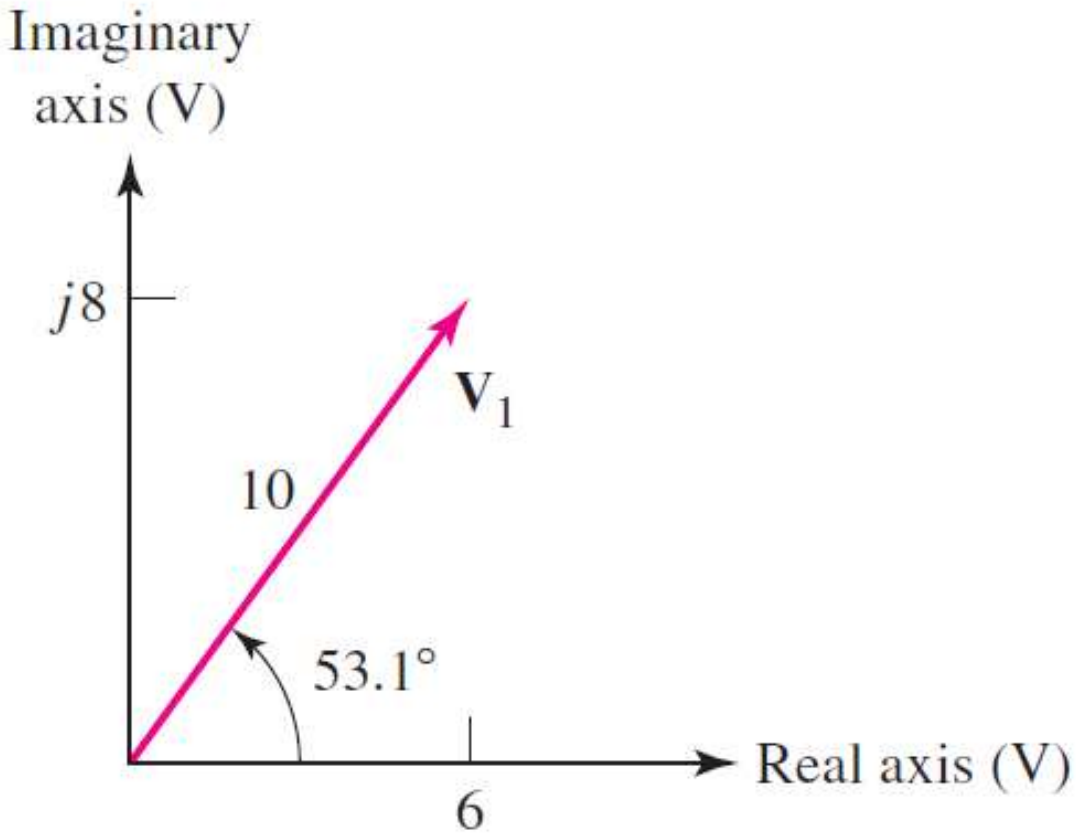

Phasor diagram

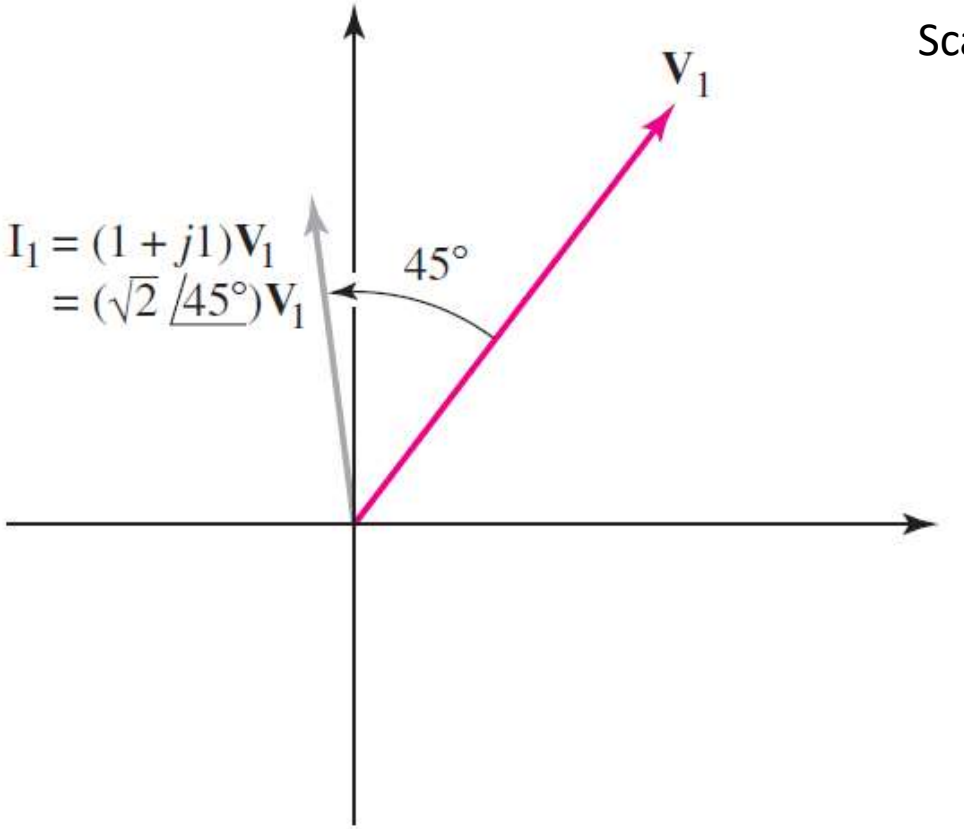

Current and voltage amplitude
Scales are different

Time domain interpretation

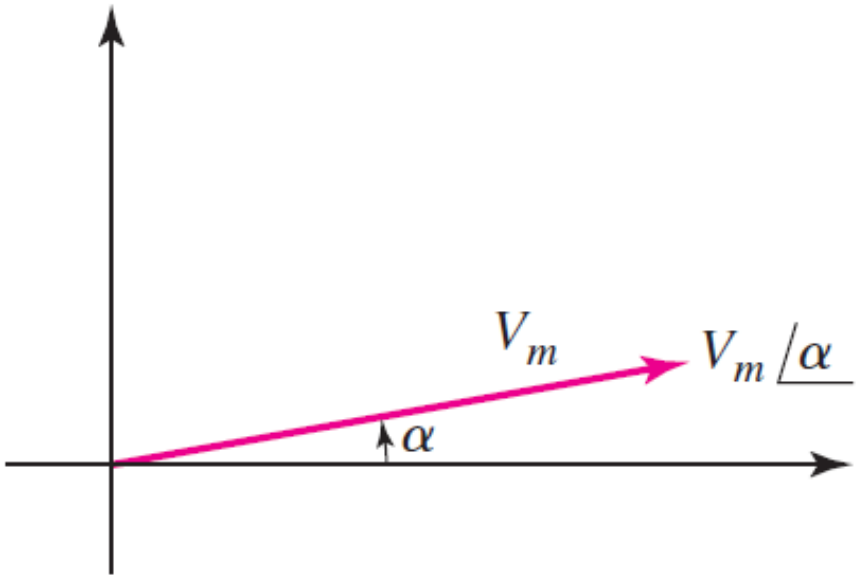

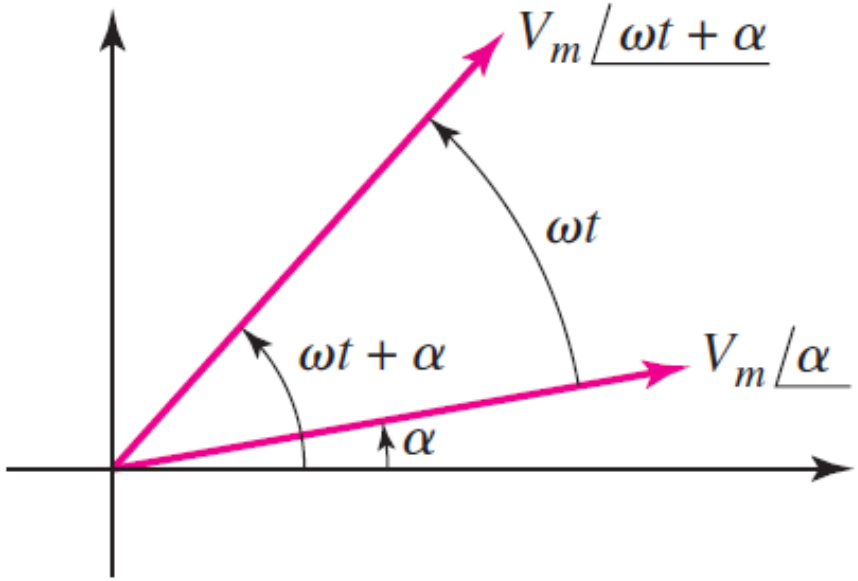

Example 10.13

Construct a phasor diagram showing $\boldsymbol{I_R}$, $\boldsymbol{I_L}$, and $\boldsymbol{I_C}$ for the circuit in the figure. Considering V = 1 + j0 Volt, find $\boldsymbol{I_S}$ and determine the angle by which Is leads $\boldsymbol{I_R}$, $\boldsymbol{I_x}$, and $\boldsymbol{I_C}$.

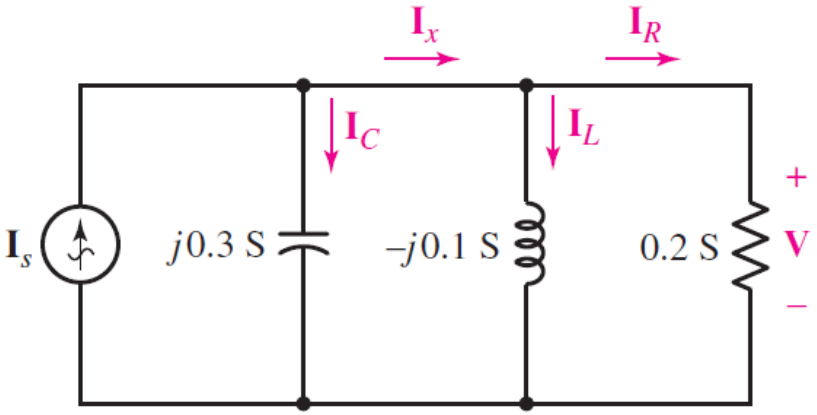

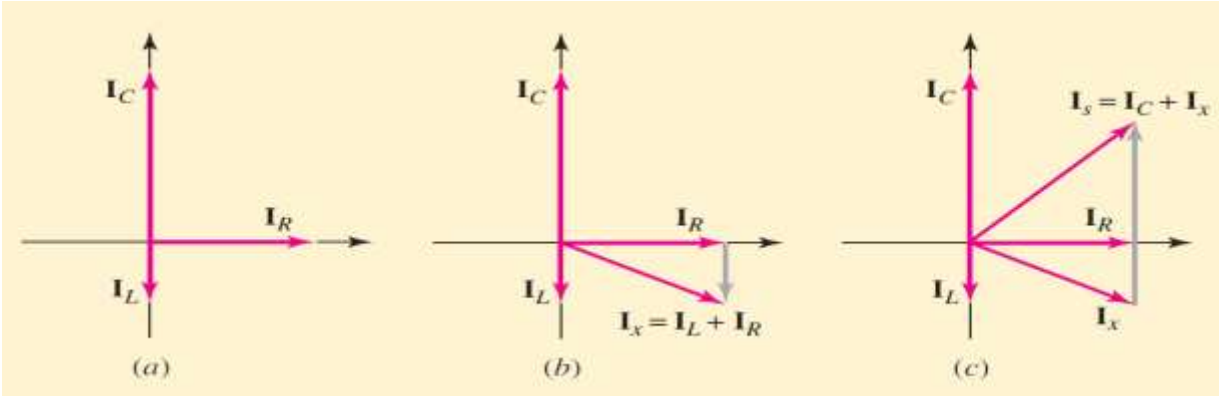

ECE113- Basic Electronics

Lecture 19: Operational Amplifiers

Dr. Sanat K Biswas, Assistant Professor

Office: B602, Research and Development Block

Email: sanat@iiitd.ac.in

INDRAPRASTHA INSTITUTE *of*
INFORMATION TECHNOLOGY
DELHI

Operational Amplifiers (Op amp)

- Analog integrated circuit (IC)
- Developed to perform mathematical operations
- Earlier op-amps were vacuum tube based
- Enabled construction of analog computers

Applications:

✓Amplifier

✓Analog computation – comparator, sum, integration, differentiation

✓Analog Filter

✓Instrumentation amplifier

✓Oscillator

✓Controller

Op-amp

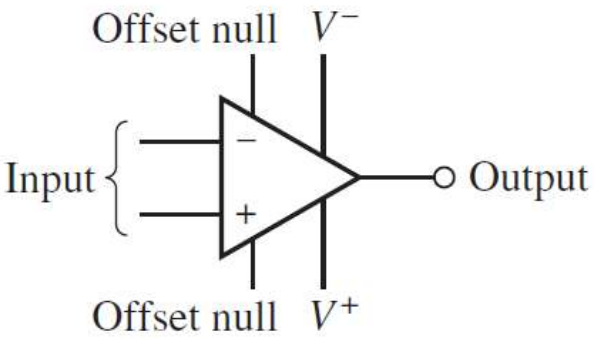

(a)

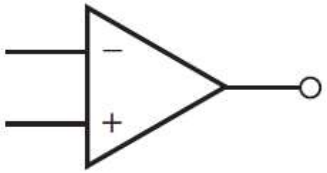

(b)

741

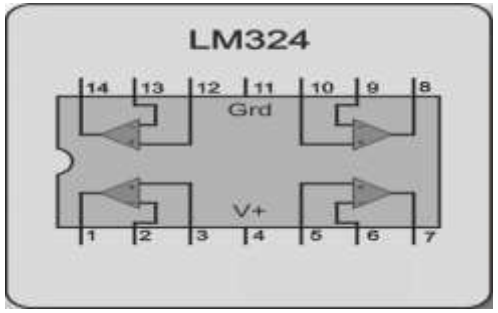

324

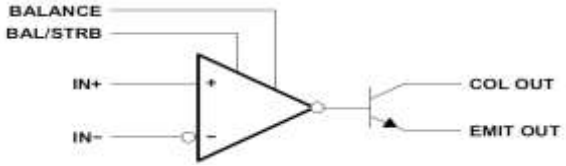

111

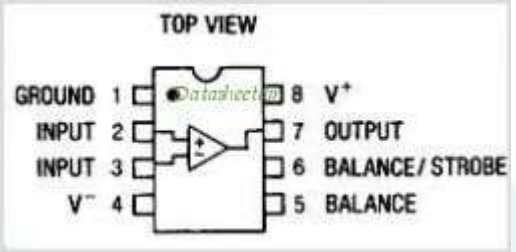

111

LM741 op amp

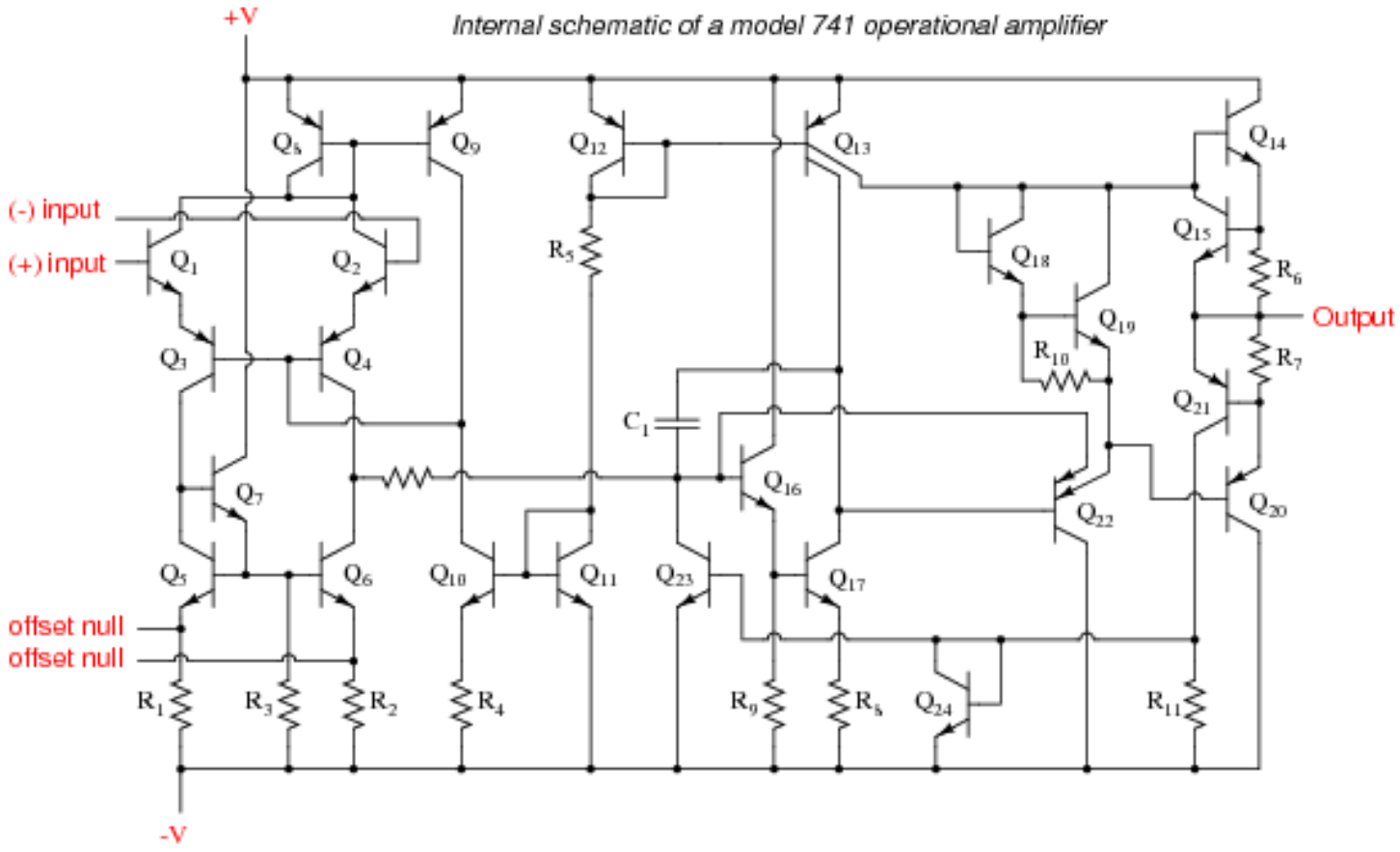
Internal schematic of a model 741 operational amplifier
+V
-V
(-) input
(+) input
offset null
offset null
Output
Q1
Q2
Q3
Q4
Q5
Q6
Q7
Q8
Q9
Q10
Q11
Q12
Q13
Q14
Q15
Q16
Q17
Q18
Q19
Q20
Q21
Q22
Q23
Q24
R1
R2
R3
R4
R5
R6
R7
R8
R9
R10
R11
C1

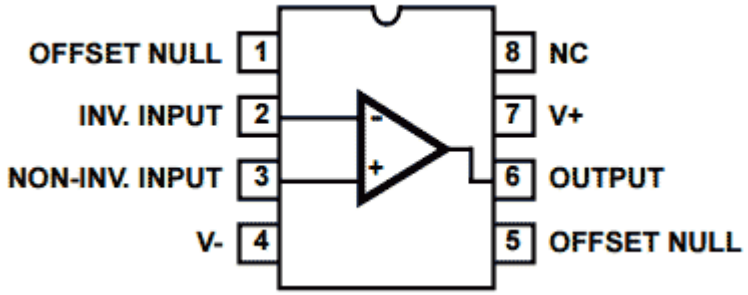
OFFSET NULL
INV. INPUT
NON-INV. INPUT
V-
1
2
3
4
8
7
6
5
NC
V+
OUTPUT
OFFSET NULL

Operation

$$V_{out} = A_{ol}(V_+ - V_-)$$

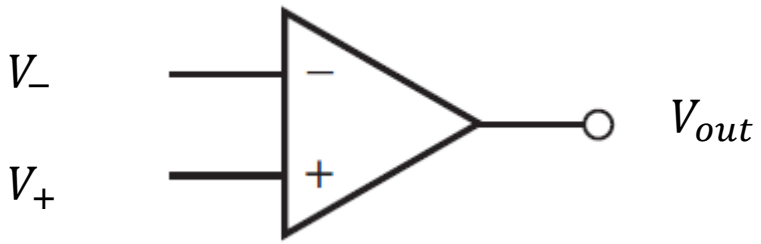

Properties of an ideal op amp

- Infinite open loop gain
- Infinite input impedance
- Zero output impedance
- Infinite bandwidth i.e. can amplify any signal (from DC to highest possible frequency in AC)
- Zero output offset voltage

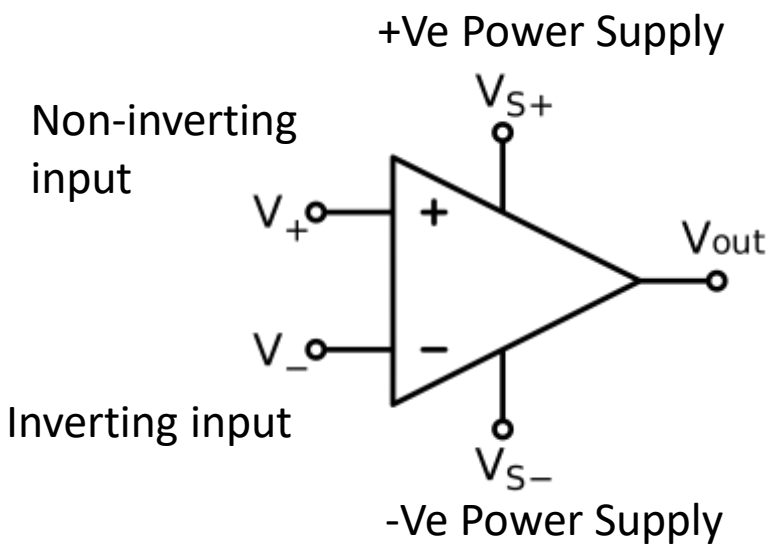

Ideal op amp rules

1. No current flows into either input terminals
2. There is no voltage difference between the two input terminals in closed loop

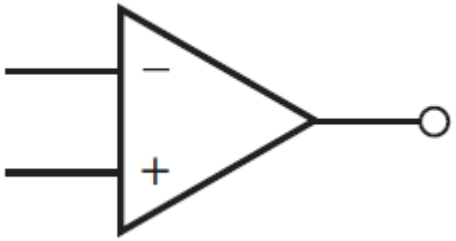

Inverting amplifier

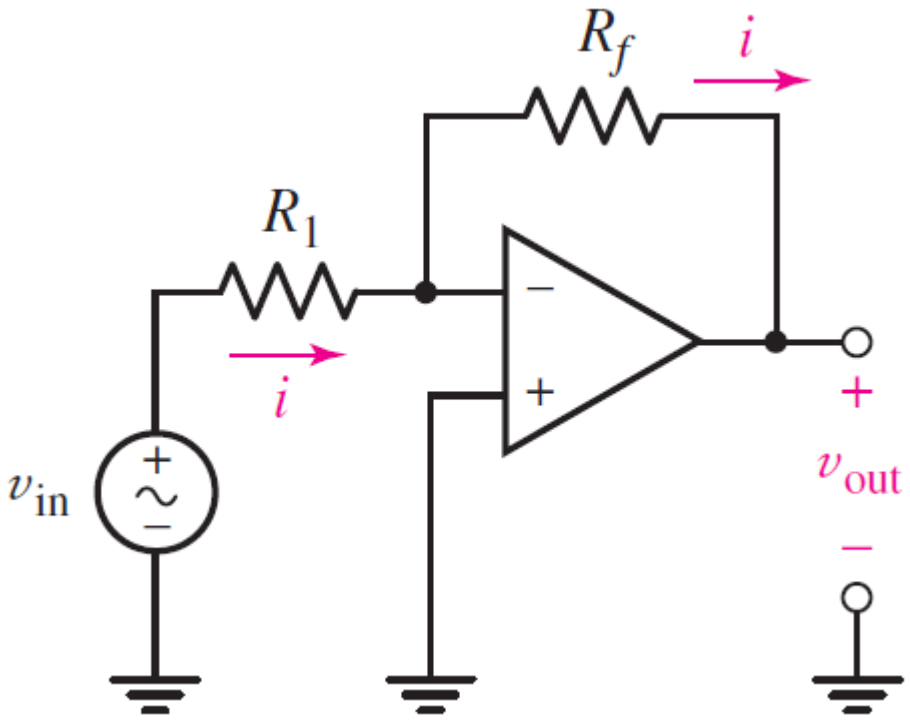

Inverting amplifier

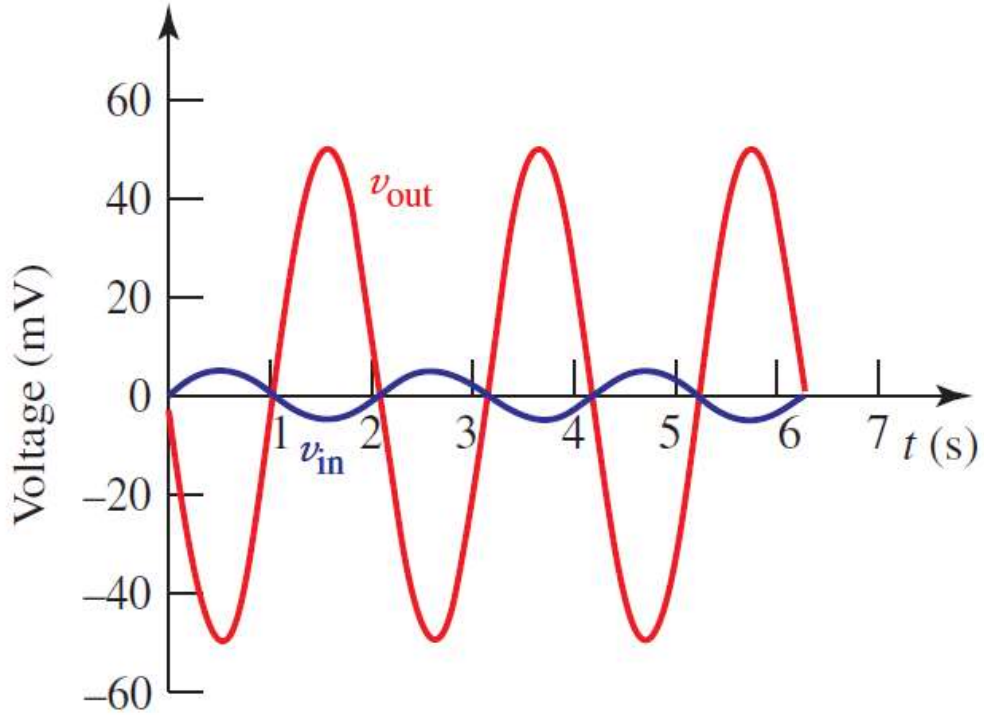

Non-inverting amplifier

$v_{in} = 5 \sin 3t$ mV, $R_1 = 4.7$ kΩ, and $R_f = 47$ kΩ

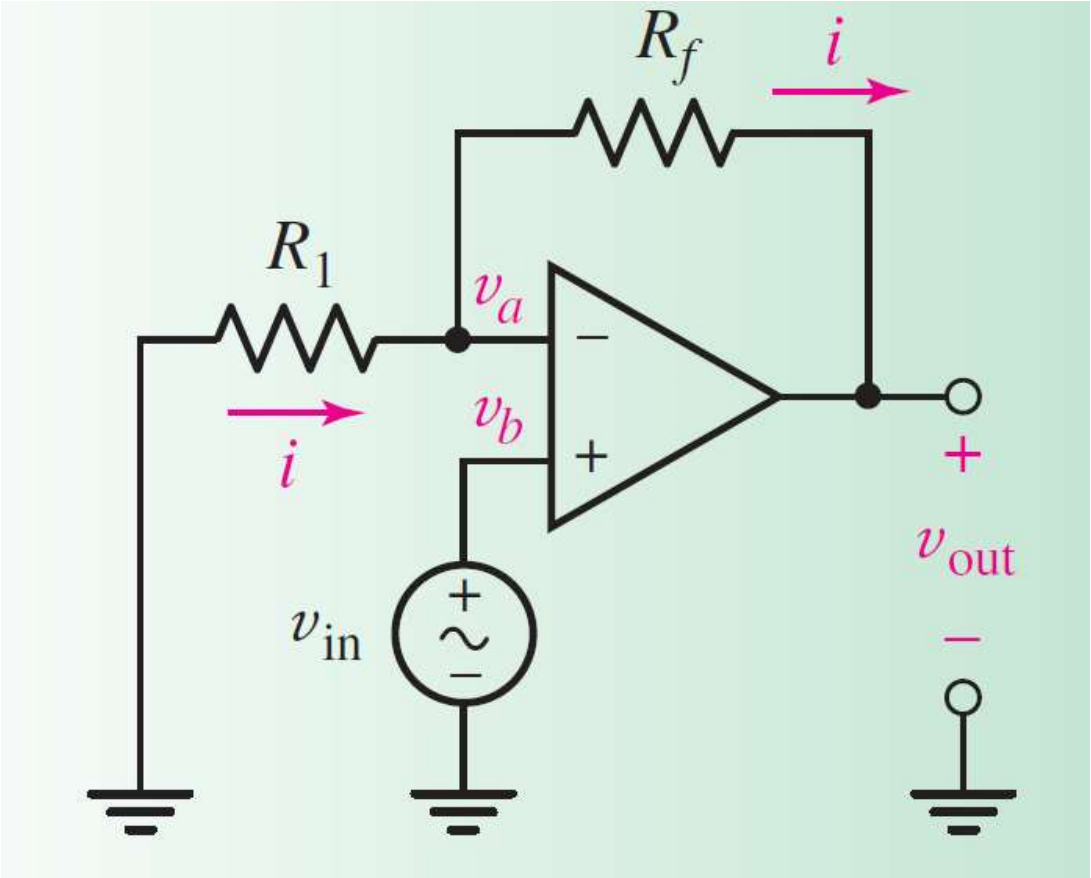

Non-inverting amplifier

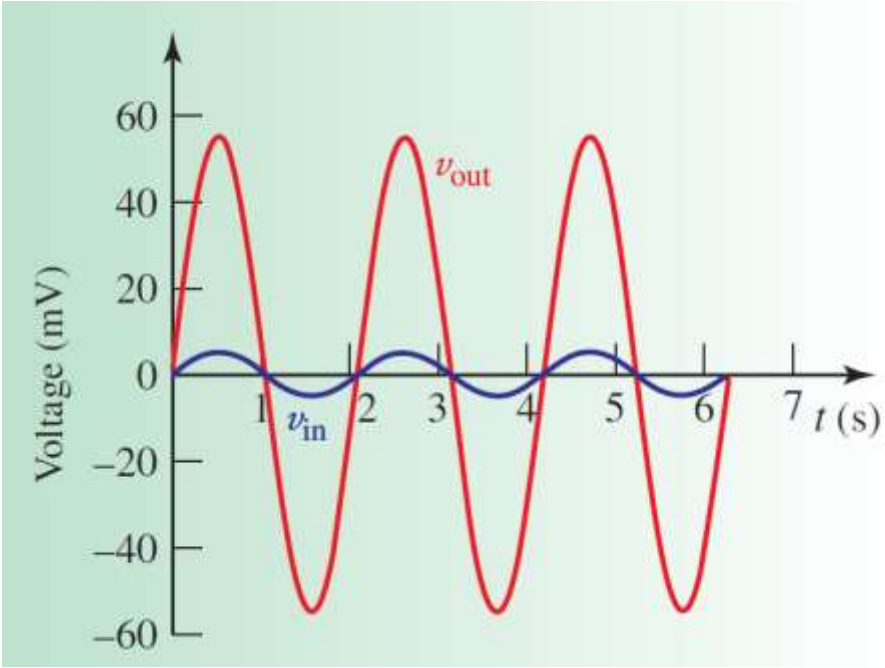

Voltage follower

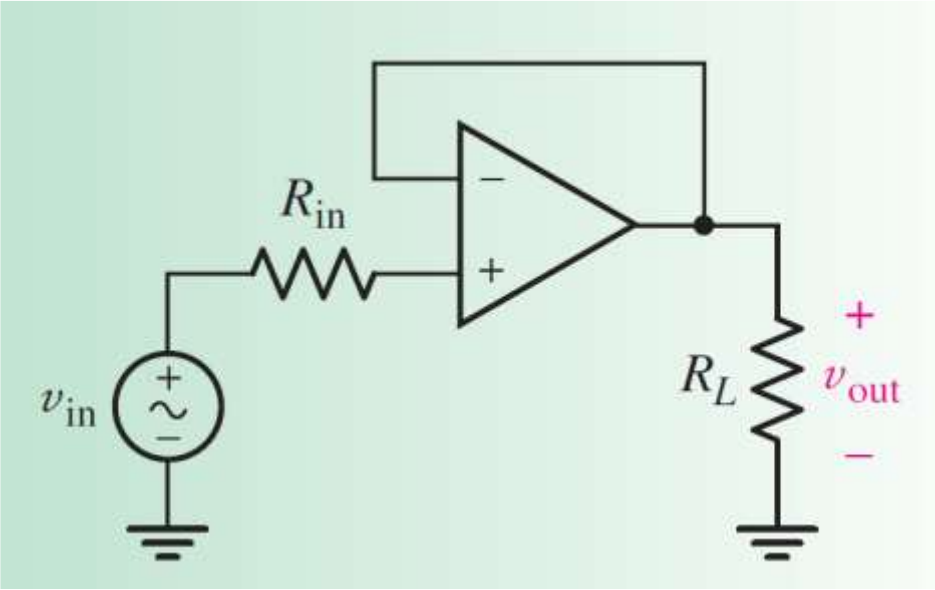

Summing amplifier – Inverting config.

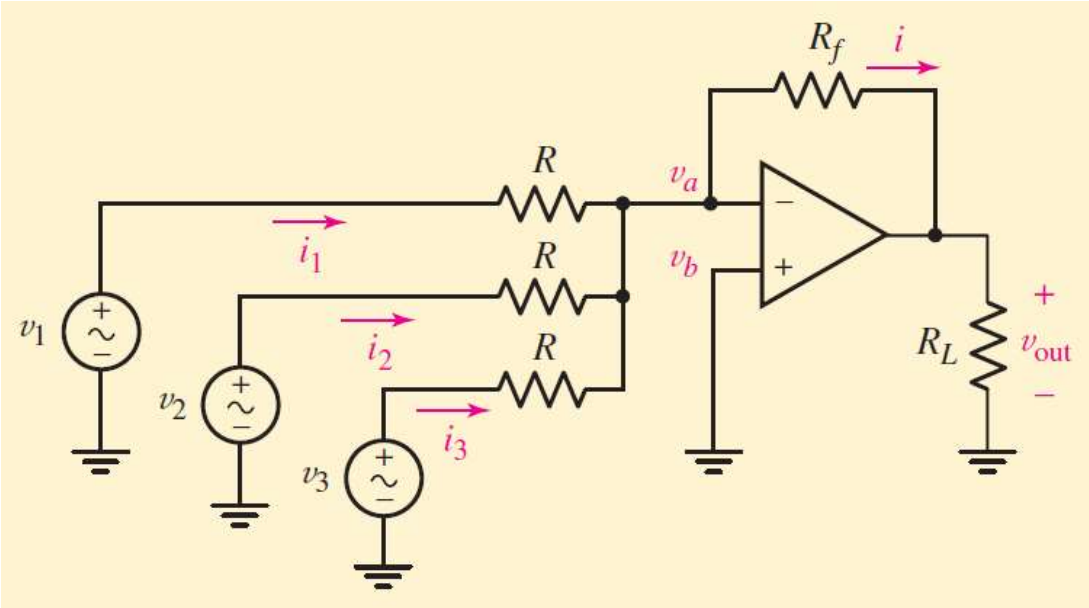

Summing amplifier – Non-inverting config.

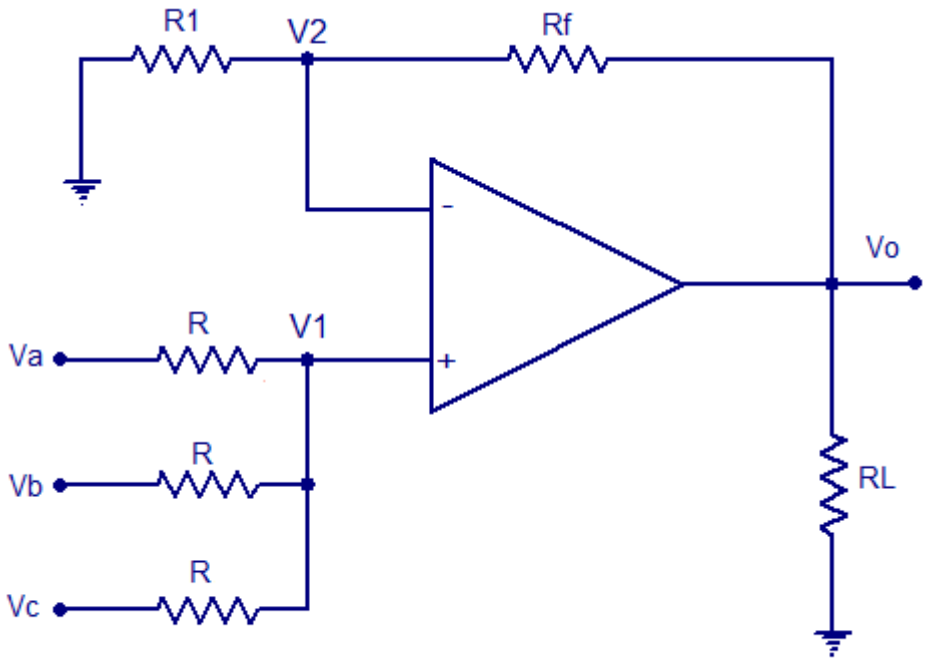

Summing amplifier non inverting configuration

Difference amplifier

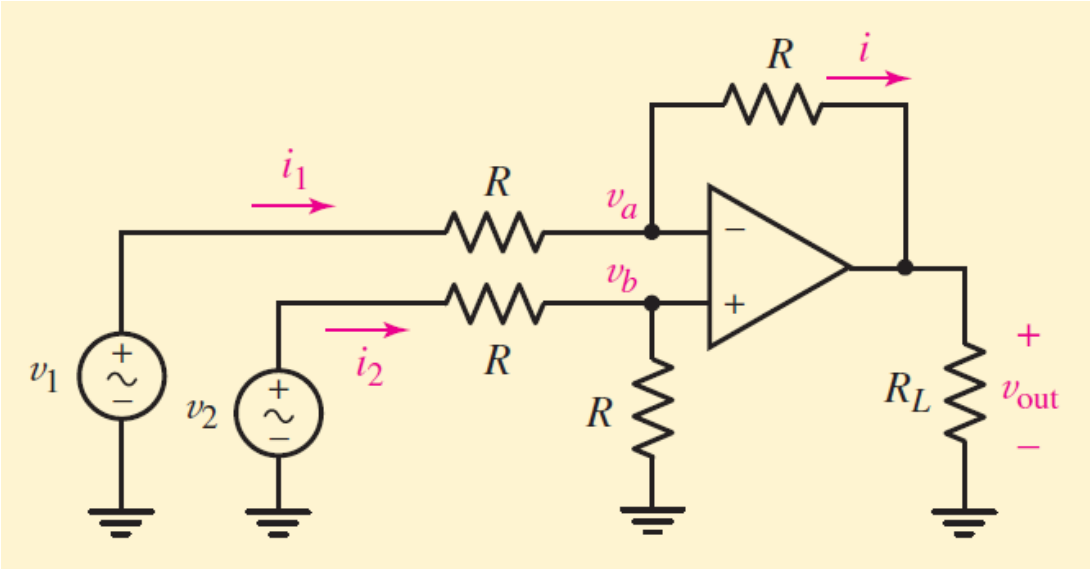

Voltage follower

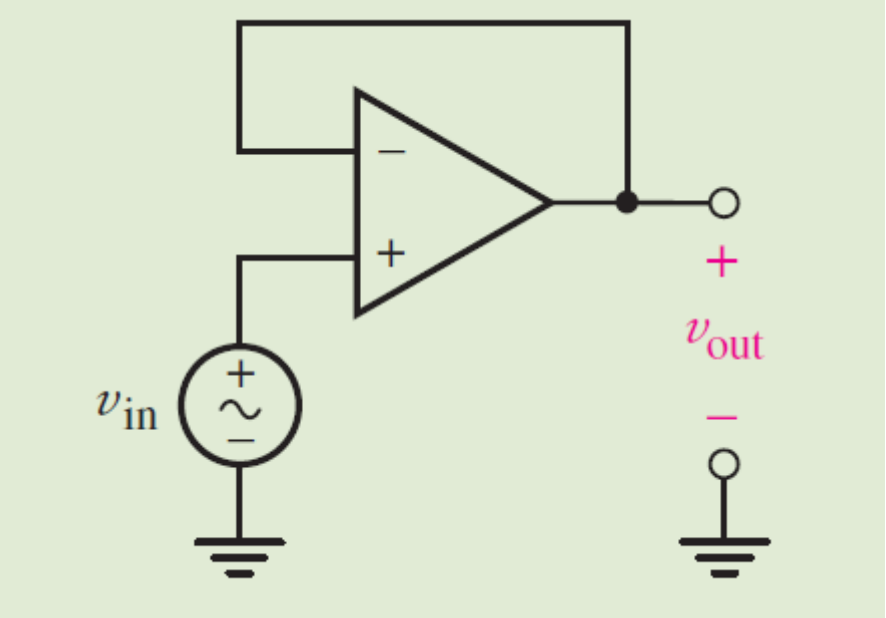

Cascaded stages

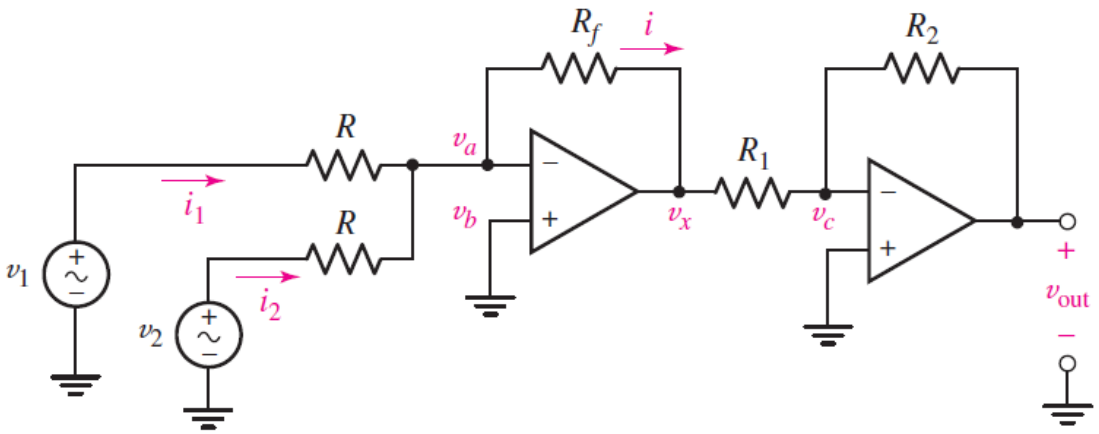

Example application

A multiple-tank gas propellant fuel system is installed in a small lunar orbit runabout. The amount of fuel in any tank is monitored by measuring the tank pressure (in psia). Technical details for tank capacity as well as sensor pressure and voltage range are given in the Table. Design a circuit which provides a positive dc voltage signal proportional to the total fuel remaining, such that 1V = 100 percent.

Tank 1 Capacity	10,000 psia
Tank 2 Capacity	10,000 psia
Tank 3 Capacity	2000 psia
Sensor Pressure Range	0 to 12,500 psia
Sensor Voltage Output	0 to 5 Vdc

Example application

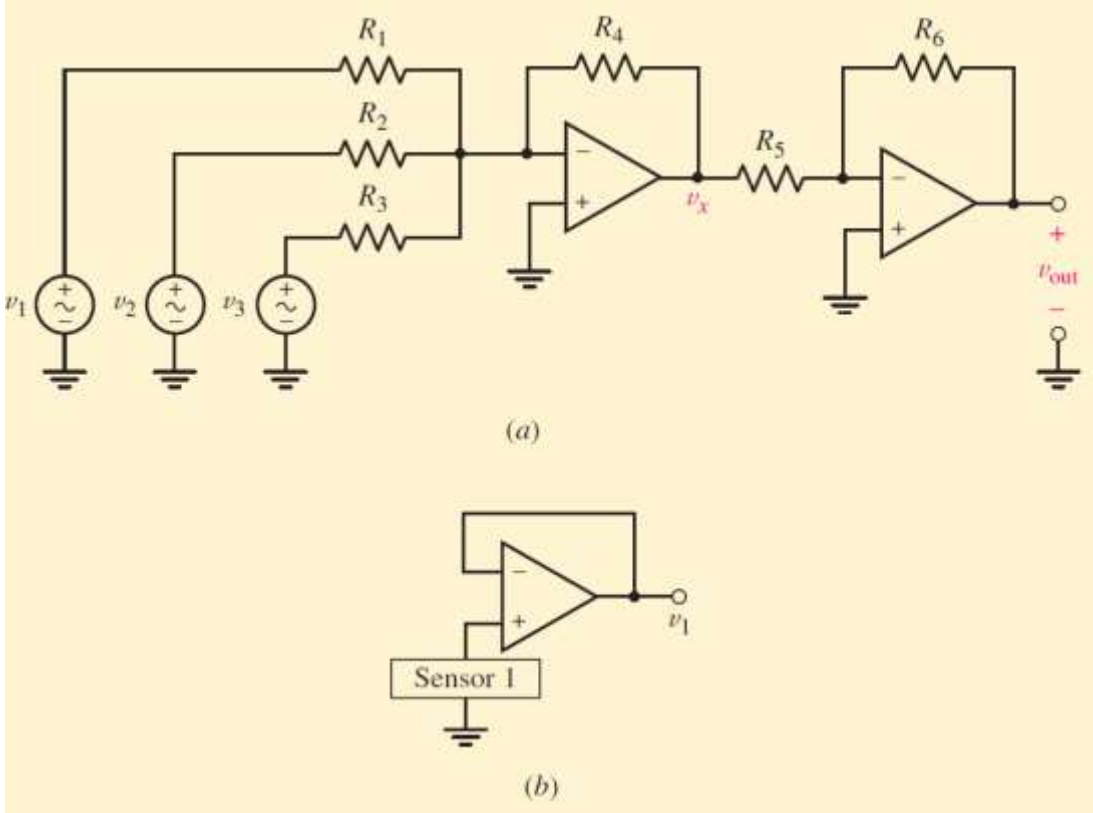

BE-113: Basic Electronics

Lecture 20: Op-amp circuits – Integrators and Differentiators

Dr. Sanat K Biswas, Assistant Professor

Office: B602, Research and Development Block

Email: sanat@iiitd.ac.in

INDRAPRASTHA INSTITUTE *of*
INFORMATION TECHNOLOGY
DELHI

Integrator Circuit

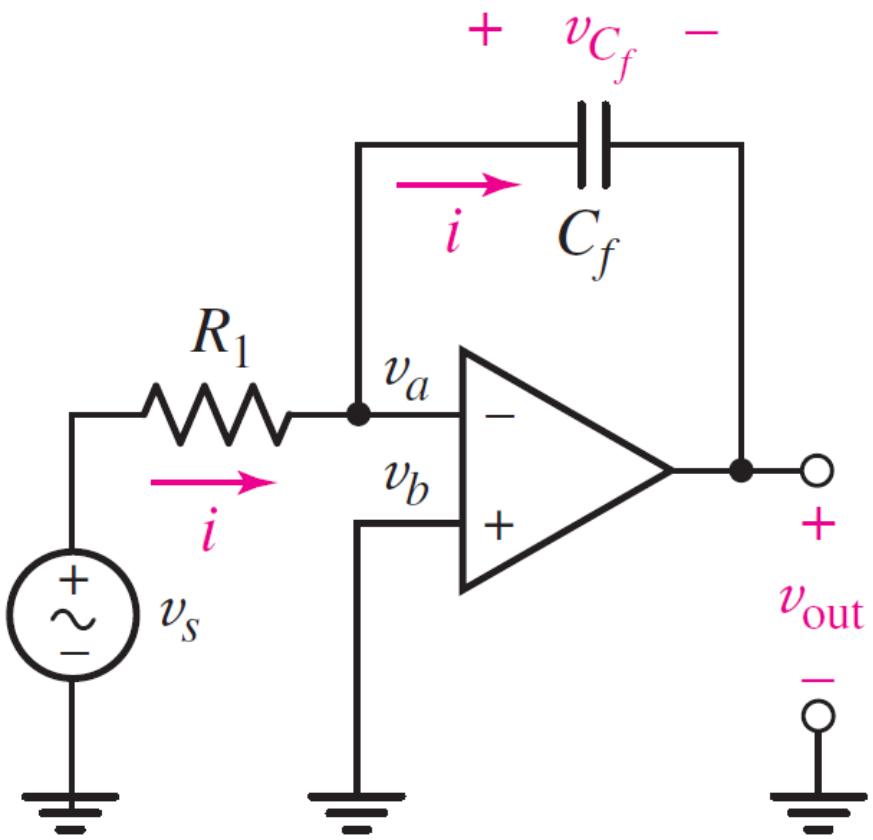

Differentiator circuit

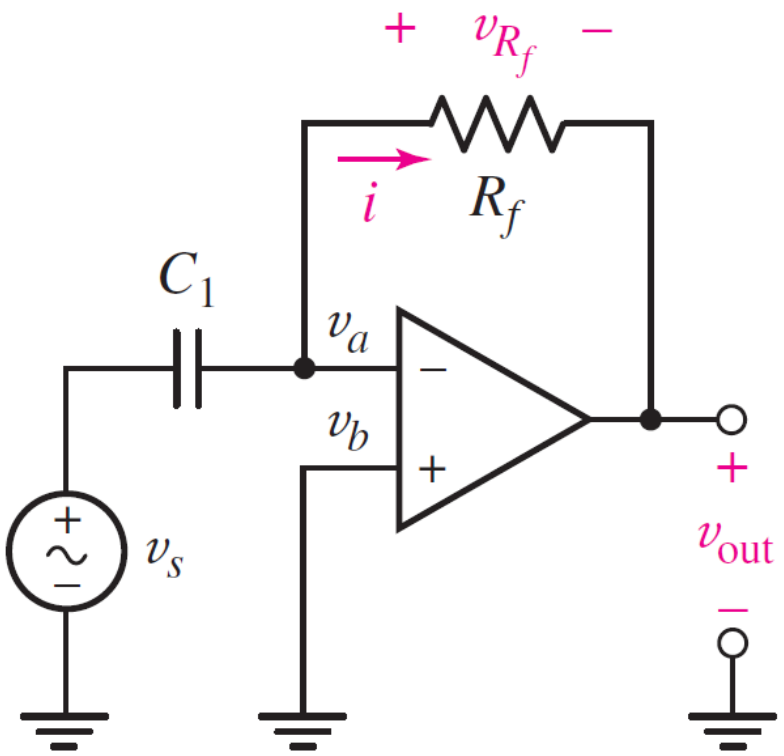

Sine wave generator

This circuit is lossless, and it provides the undamped response v = 2 sin 3t V, if v(0) = 0 and i(0)=−1/6 A.
But practical Inductor always has some resistance

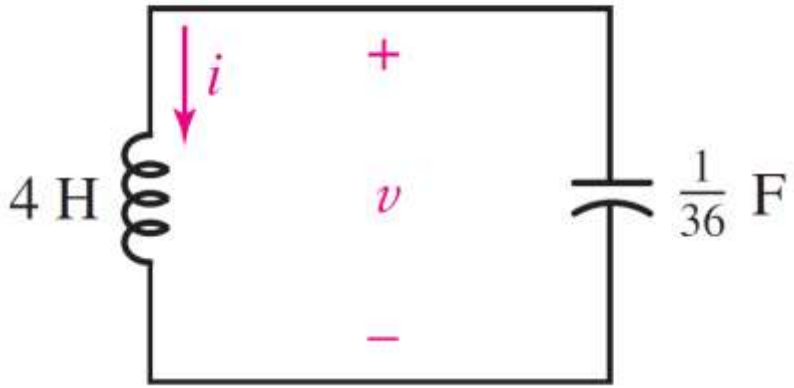

Op-amp solution

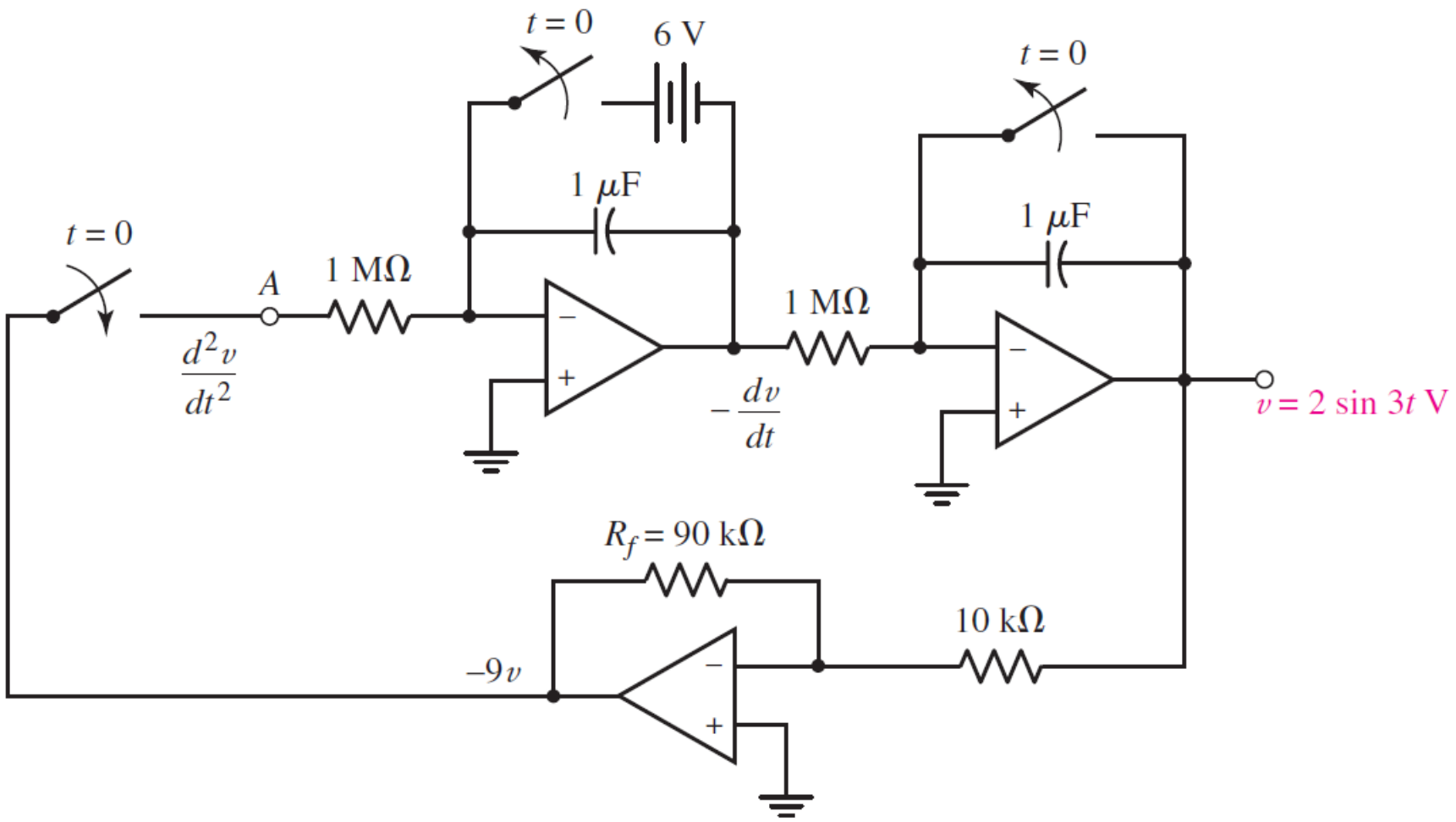

BE-113: Basic Electronics

Lecture 21: Op-amp circuits – Integrators and Differentiators

Dr. Sanat K Biswas, Assistant Professor

Office: B602, Research and Development Block

Email: sanat@iiitd.ac.in

INDRAPRASTHA INSTITUTE *of*
INFORMATION TECHNOLOGY
DELHI

Op-amp as current source

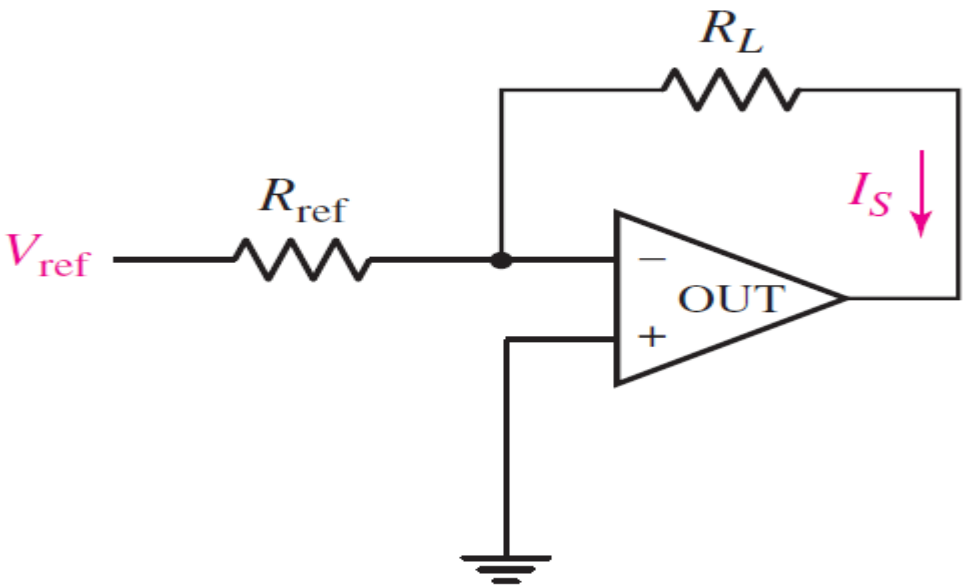

Practical Op-amps

TABLE **6.3** Typical Parameter Values for Several Types of Op Amps

Part Number	**μA741**	**LM324**	**LF411**	**AD549K**	**OPA690**
Description	General purpose	Low-power quad	Low-offset, low-drift JFET input	Ultralow input bias current	Wideband video frequency op amp
Open loop gain A	2×10^5 V/V	10^5 V/V	2×10^5 V/V	10^6 V/V	2800 V/V
Input resistance	2 MΩ	*	1 TΩ	10 TΩ	190 kΩ
Output resistance	75 Ω	*	~1 Ω	~15 Ω	*
Input bias current	80 nA	45 nA	50 pA	75 fA	3 μA
Input offset voltage	1.0 mV	2.0 mV	0.8 mV	0.150 mV	±1.0 mV
CMRR	90 dB	85 dB	100 dB	100 dB	65 dB
Slew rate	0.5 V/μs	*	15 V/μs	3 V/μs	1800 V/μs
PSpice Model	✓	✓	✓		

* Not provided by manufacturer.

✓ Indicates that a PSpice model is included in Orcad Capture CIS Lite Edition 16.3.

Practical Op-amps

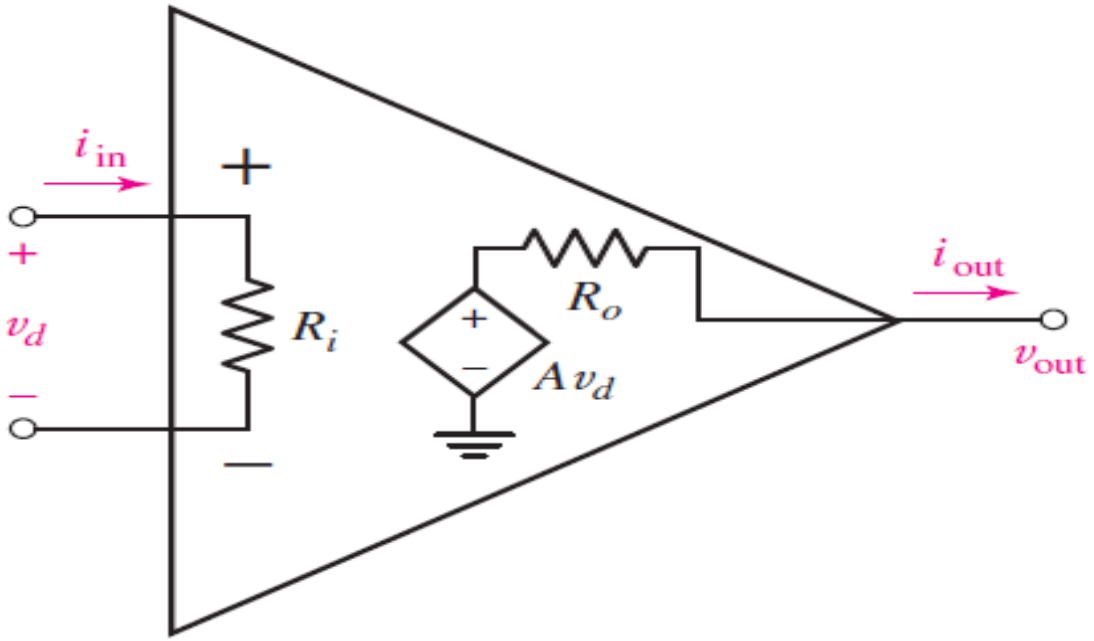

Example 6.6

Using the appropriate values for the µA741 op amp in the model, reanalyze the inverting amplifier circuit of Fig

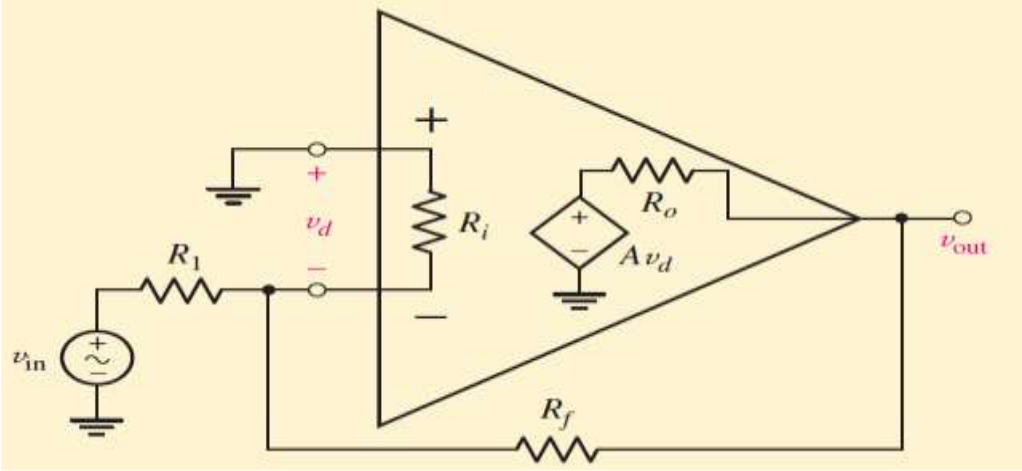

Example 6.6

Deviation from ideal op-amp rules

- Recall, Rule 1 – there is no voltage difference between to input terminals irrespective of out put voltage

$$v_d = \frac{v_{out}}{A}$$

- Recall, Rule 2 – No current flows into either of the input terminals

$$i_{in} = \frac{v_d}{R_i}$$

Deviation from ideal op-amp rules

- Ideal op-amp has zero output resistance

$$v_{out} = Av_d - R_o i_{out}$$

Common-mode rejection:

$$v_1 = 2 + 3sin3t$$
$$v_2 = 2$$
$$v_{out} = -3sin3t$$

But, in practice, some contribution from 2v in the o/p is observed

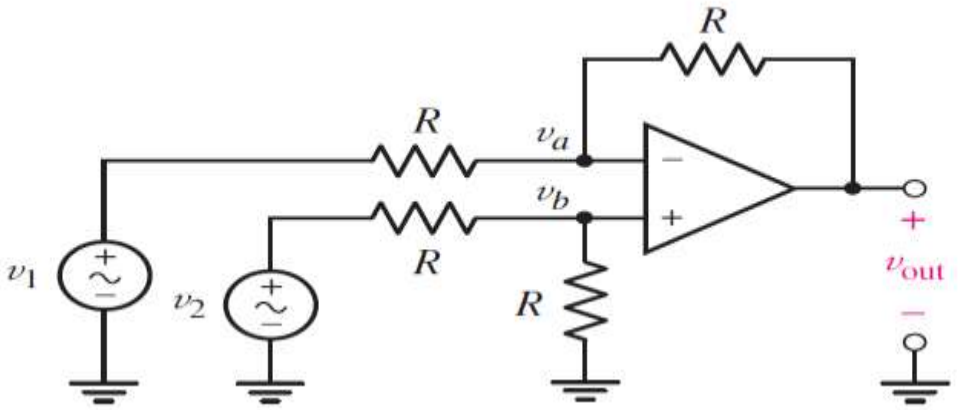

Common-mode rejection

- Common mode voltage - v_{CM}

$$A_{CM} = \left|\frac{v_{OCM}}{v_{CM}}\right|$$

$$CMRR = \left|\frac{A}{A_{CM}}\right|$$

Slew rate

- Rate at which the output can respond to the change in the input voltage

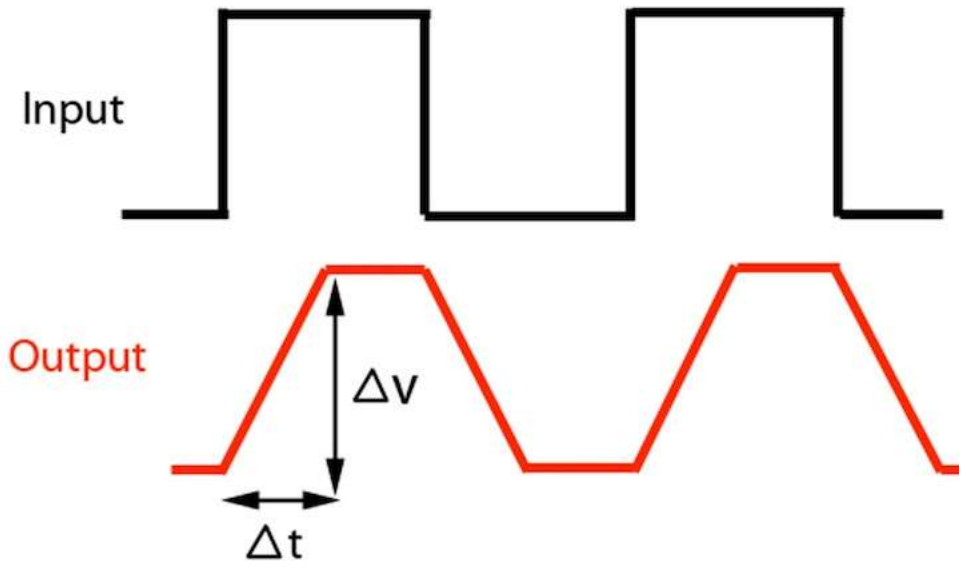

Figure from: https://www.audioholics.com/audio-amplifier/amplifier-slew-rate

Instrumentation amplifier

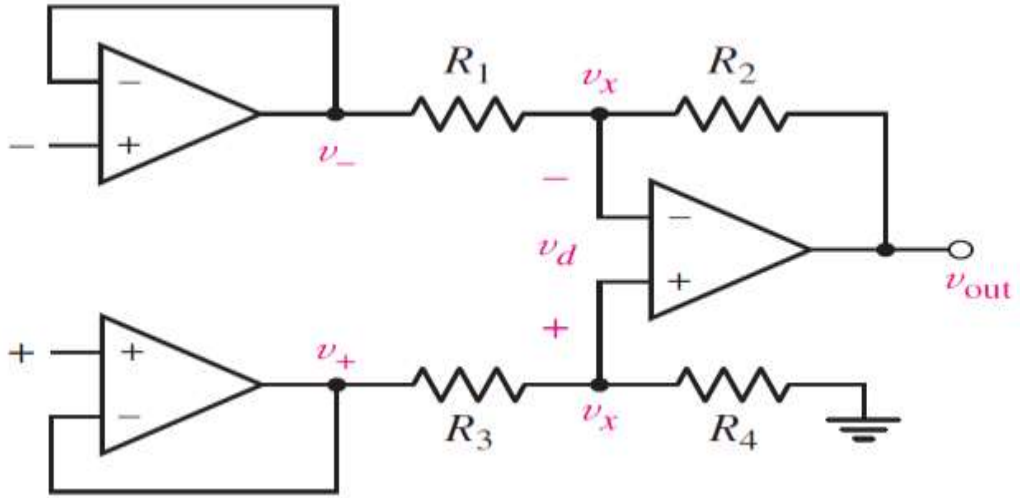

Instrumentation amplifier

ECE113: Basic Electronics

Lecture 22: Diodes

Dr. Sanat K Biswas, Assistant Professor

Office: B602, Research and Development Block

Email: sanat@iiitd.ac.in

INDRAPRASTHA INSTITUTE *of*
INFORMATION TECHNOLOGY
DELHI

Resources

- Sedra, Adel S., and Kenneth Carless Smith. Microelectronic circuits. Vol. 1. New York: Oxford University Press.

Diode

- A fundamental non-linear circuit element
- Conducts current in one direction
- Historically this device was vacuum tube based
- Now semiconductor diodes are used
- Used in
  - Rectifier circuits
  - Voltage regulator
  - Limiter
  - Logic gate

Semiconductor diode

- Two terminals: Anode and cathode (historical reference, has not changed)
- Two operation modes:
  - Forward bias: +ve voltage (relative to the reference direction)
  - Reverse bias: -ve voltage (relative to the reference direction)
- Current flows from anode to cathode when forward bias is applied
- No current flows when reverse bias is applied

Diode symbol

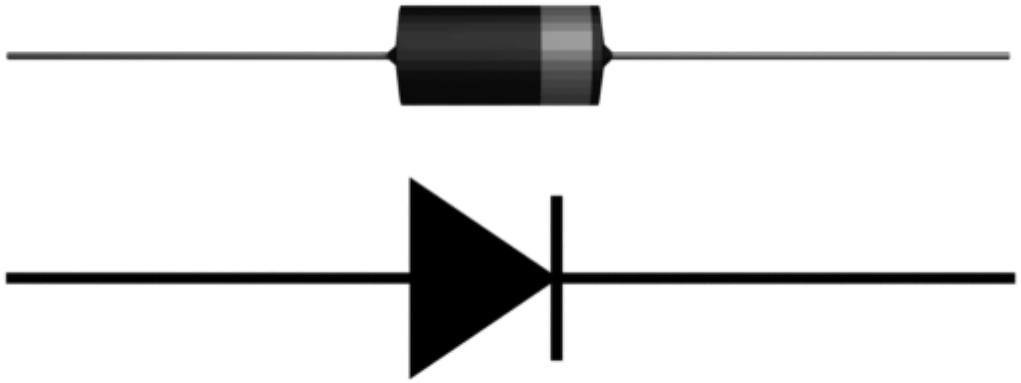

Anode

Cathode

Ideal diode characteristics

- Ideal diode acts as short circuit when forward bias is applied (this is also described as diode is turned on)
- Acts as open circuit when reverse bias is applied (diode is turned off/ cut off)

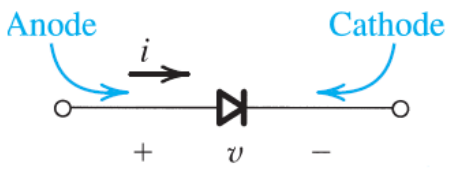

(a)

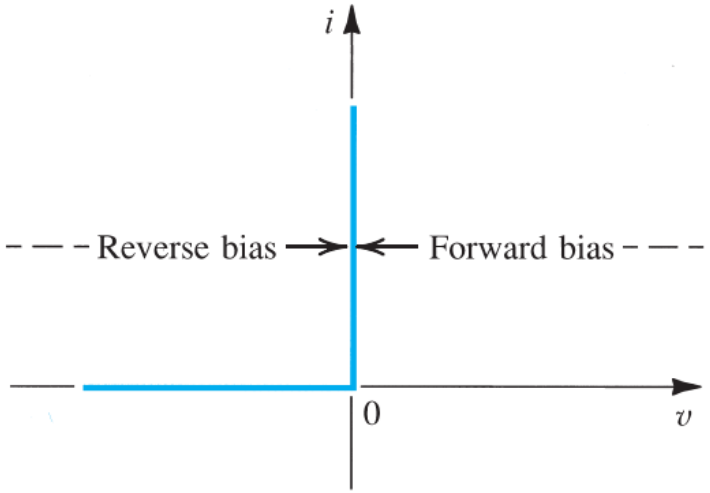

(b)

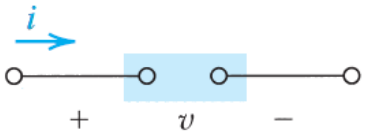

$v < 0 \Rightarrow i = 0$

(c)

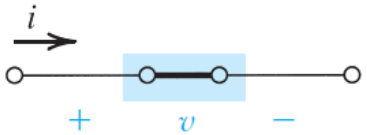

$i > 0 \Rightarrow v = 0$

(d)

Two modes of operations

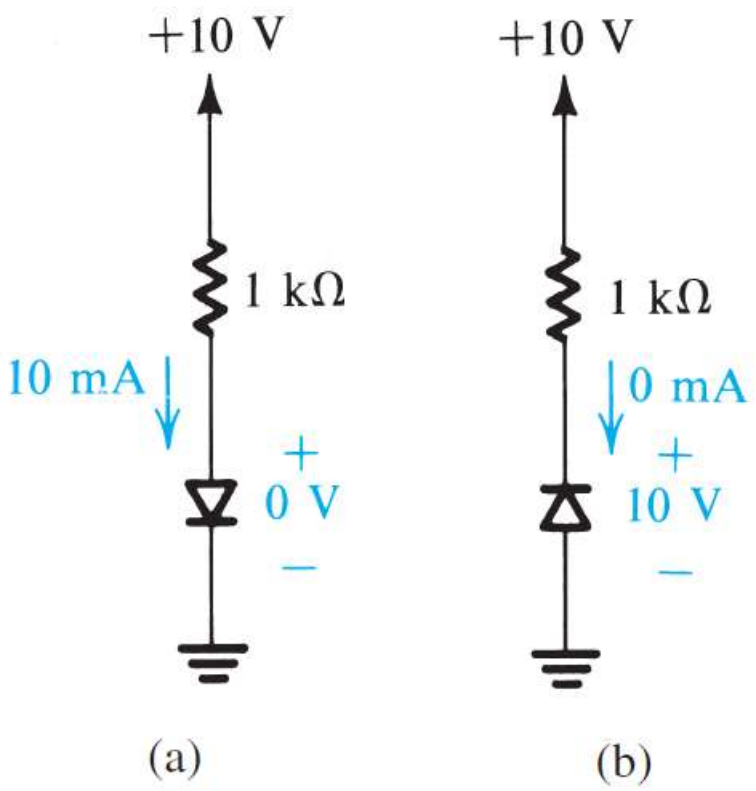

Simple Application

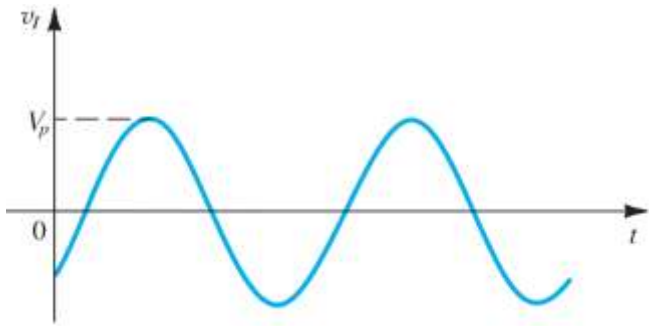

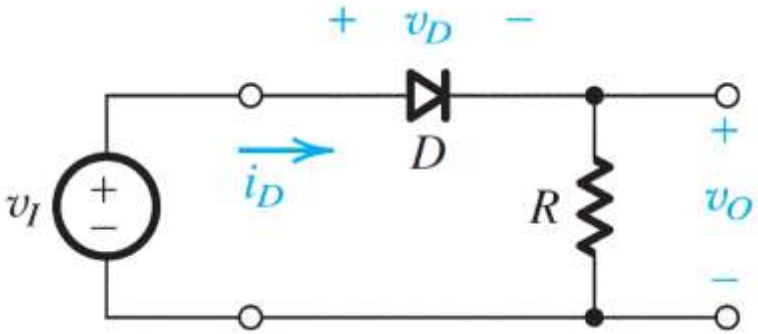

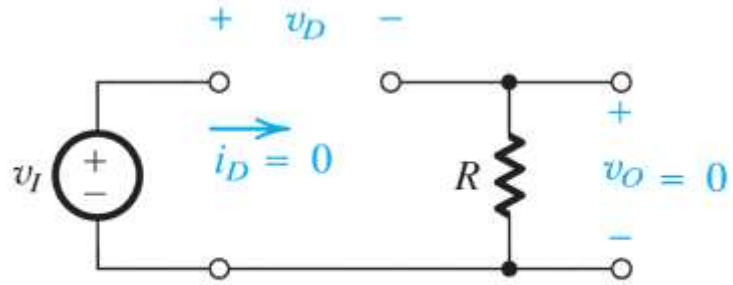

$v_I \leq 0$

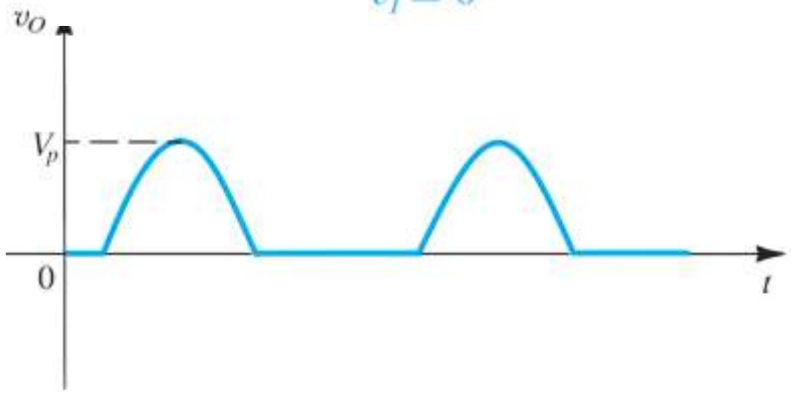

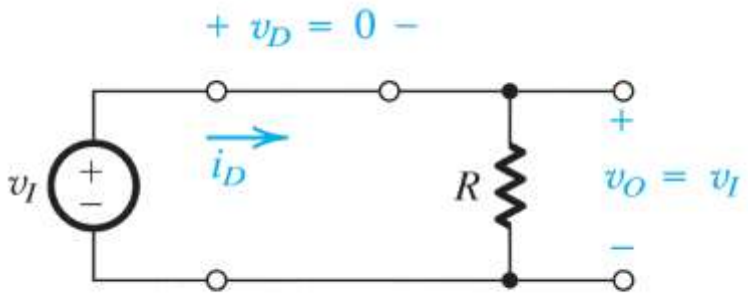

$v_I \geq 0$

Example problem

Assuming the diodes to be ideal, find the values of *I* and *V* in the circuits

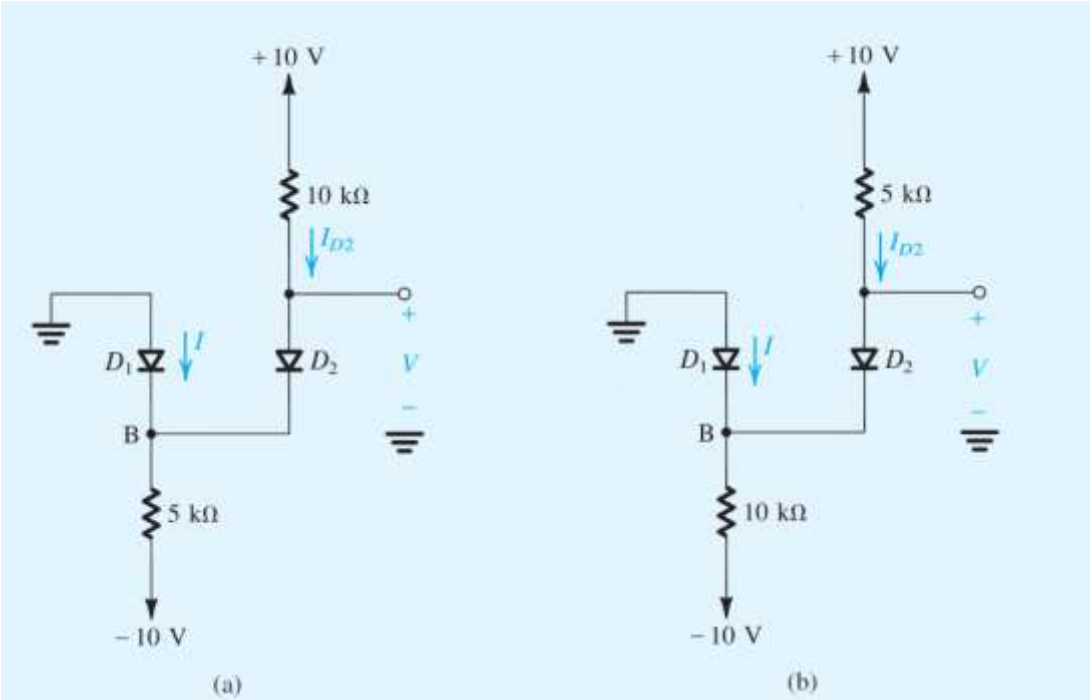

Practical consideration

The i-v characteristics of a real diode is like this

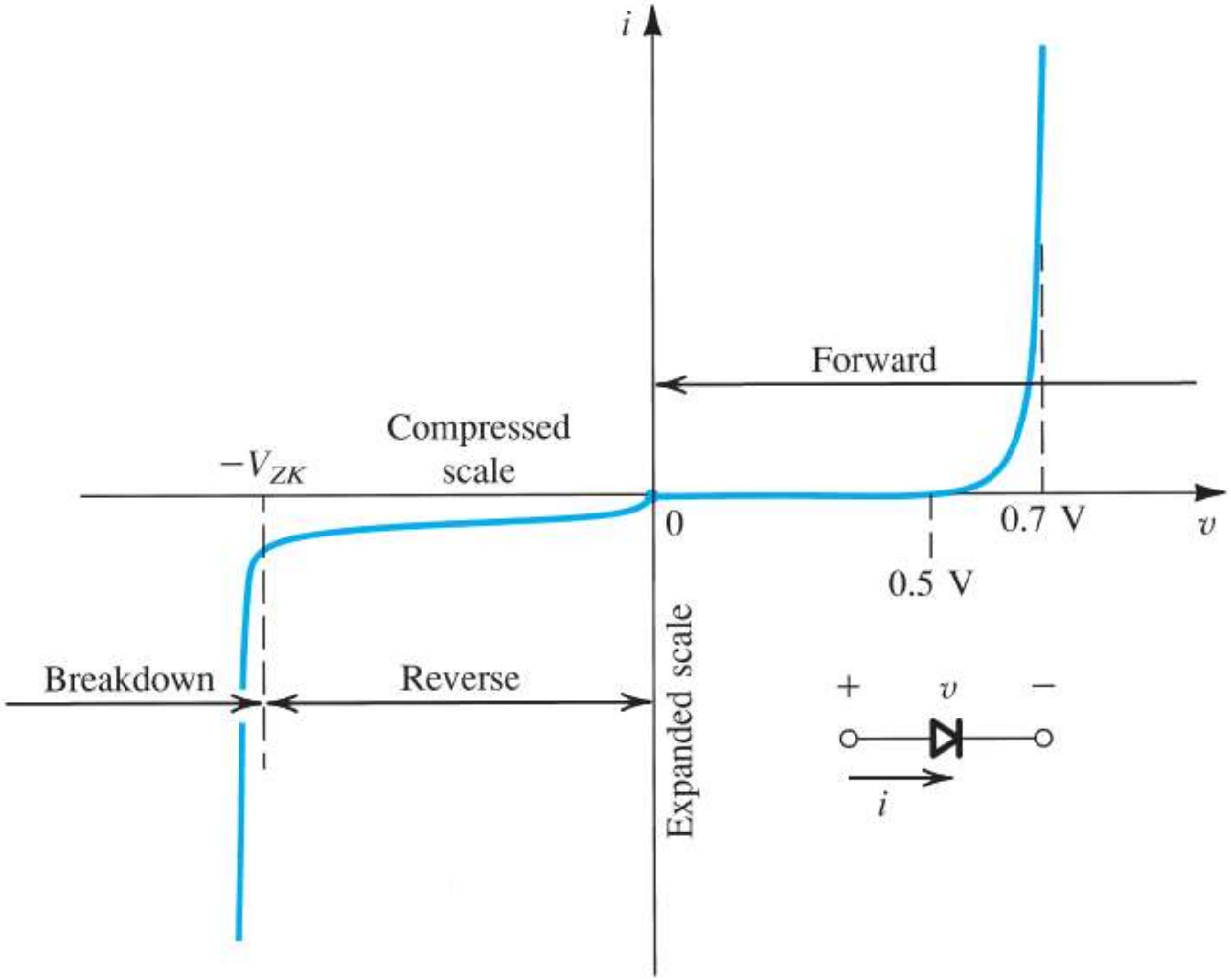

Rapid analysis

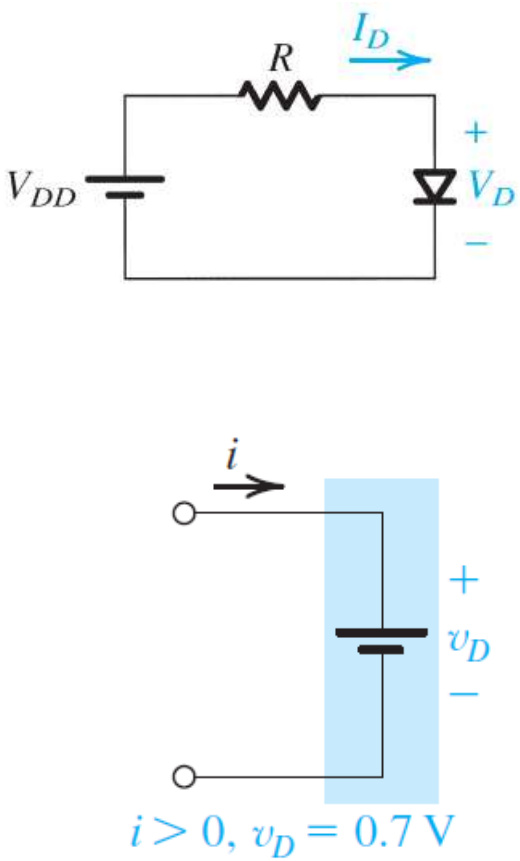

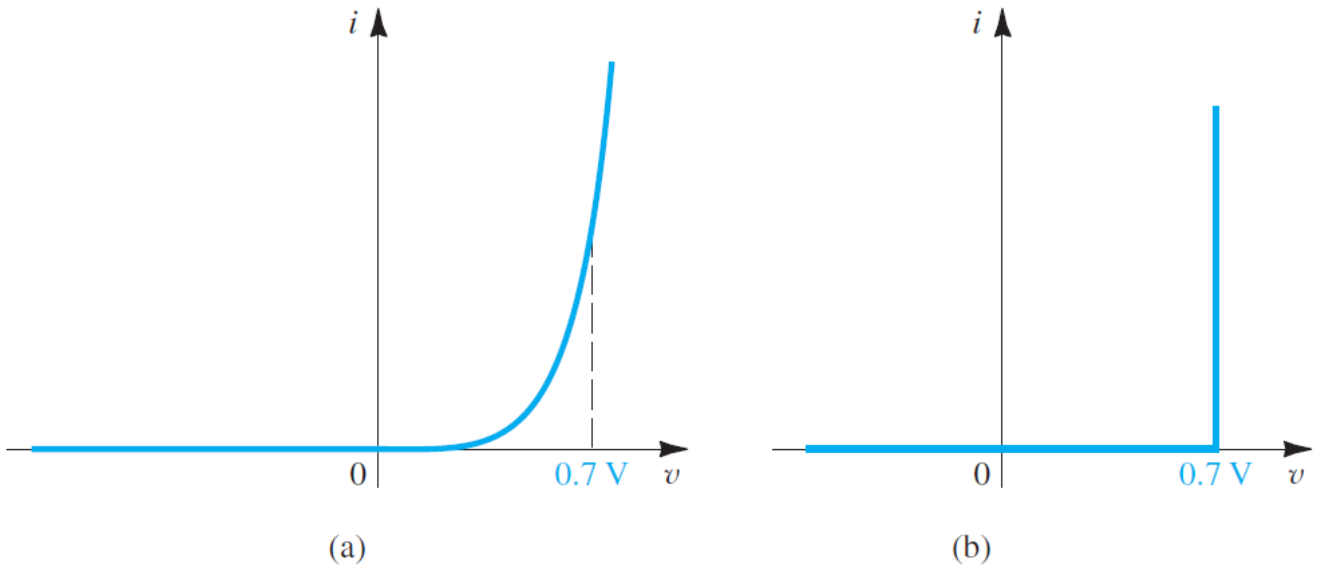

Forward Bias

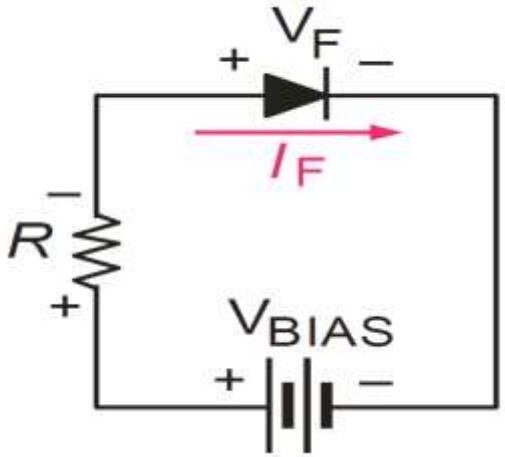

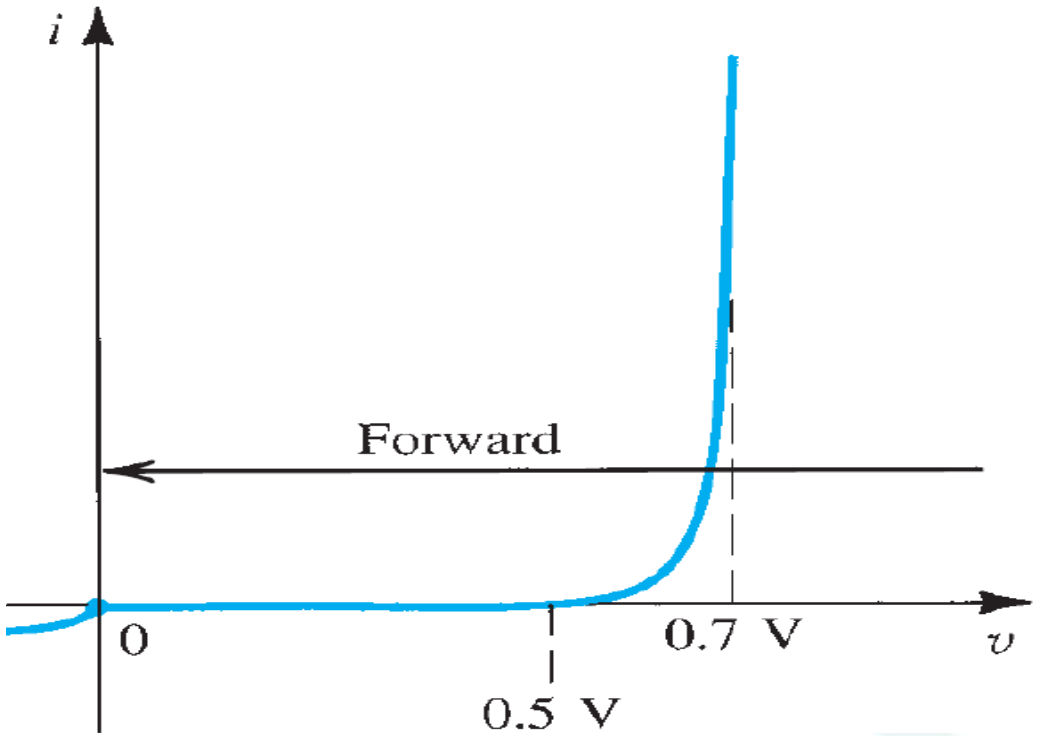

Reverse Bias

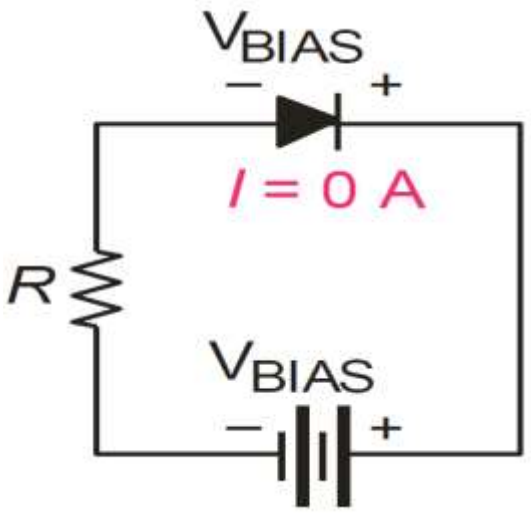

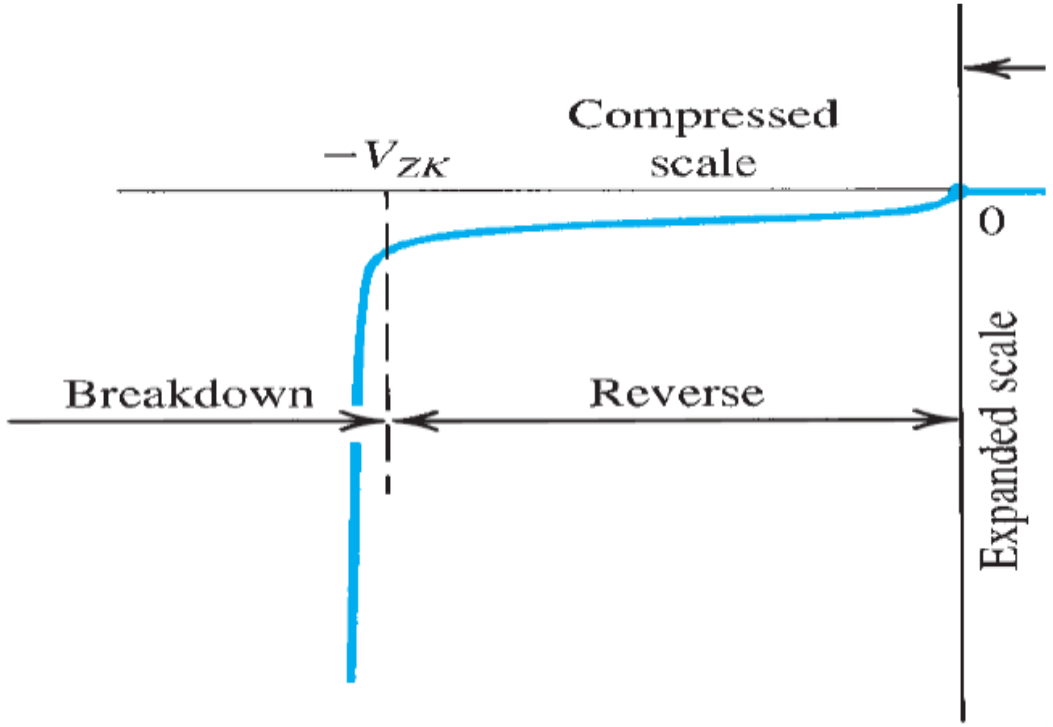

ECE113- Basic Electronics

Lecture 23: Diodes

Dr. Sanat K Biswas, Assistant Professor

Office: B602, Research and Development Block

Email: sanat@iiitd.ac.in

INDRAPRASTHA INSTITUTE *of*
INFORMATION TECHNOLOGY
DELHI

Diode V-I characteristics

VI Characteristic for forward bias:

- The current in forward biased called forward current
- At 0V (V_{BIAS}) across the diode, there is no forward current.
- With gradual increase of V_{BIAS}, the forward voltage and forward current increases.
- A resistor in series will limit the forward current in order to protect the diode from overheating and permanent damage.
- A portion of forward-bias voltage drops across the limiting resistor.
- Continuing increase of V_{BIAS} causes rapid increase of forward current but only a gradual increase in voltage across diode.

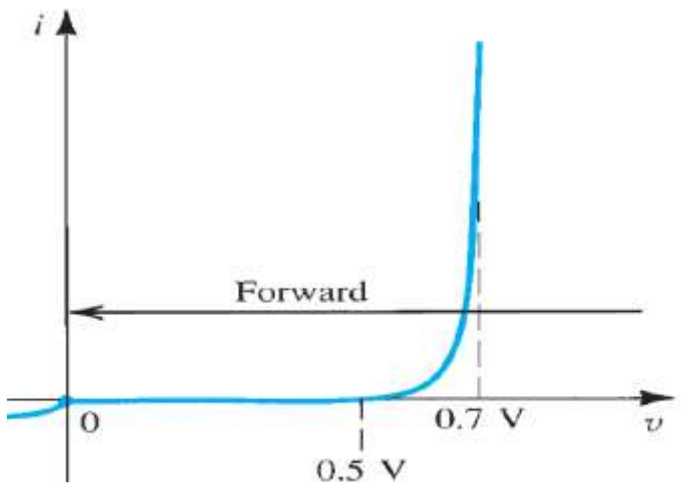

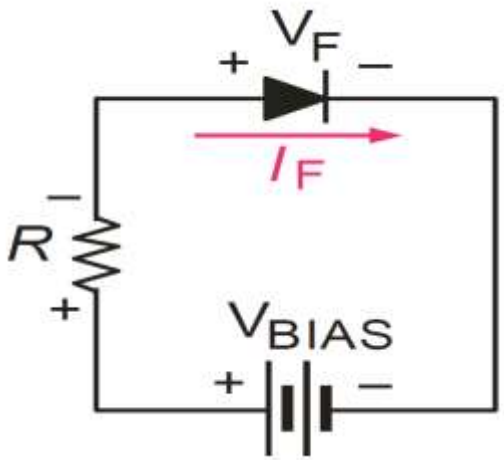

Diode V-I characteristics

VI Characteristic for reverse bias:

- With 0V reverse voltage there is no reverse current.
- There is only a small current through the junction as the reverse voltage increases.
- At a point, reverse current shoots up with the break down of diode. The voltage called break down voltage (V_{BR}) This is not normal mode of operation.
- After this point the reverse voltage remains at approximately V_{BR} but I_R increase very rapidly.

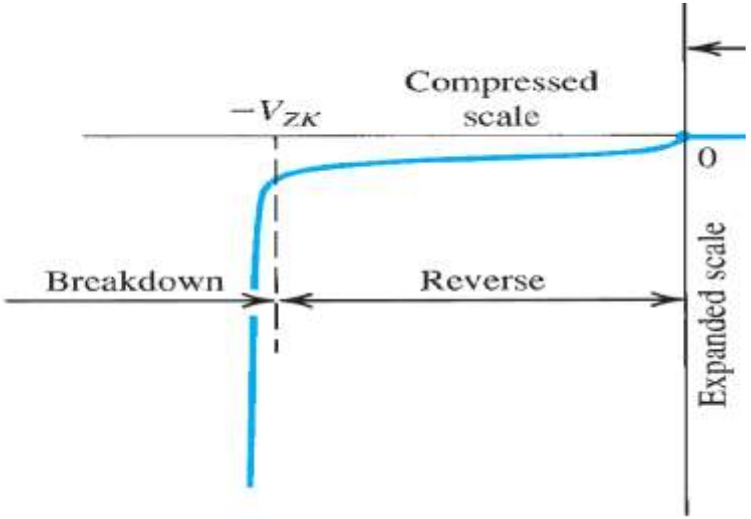

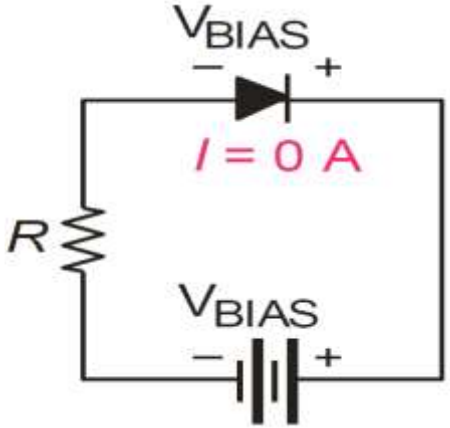

Complete V-I characteristics

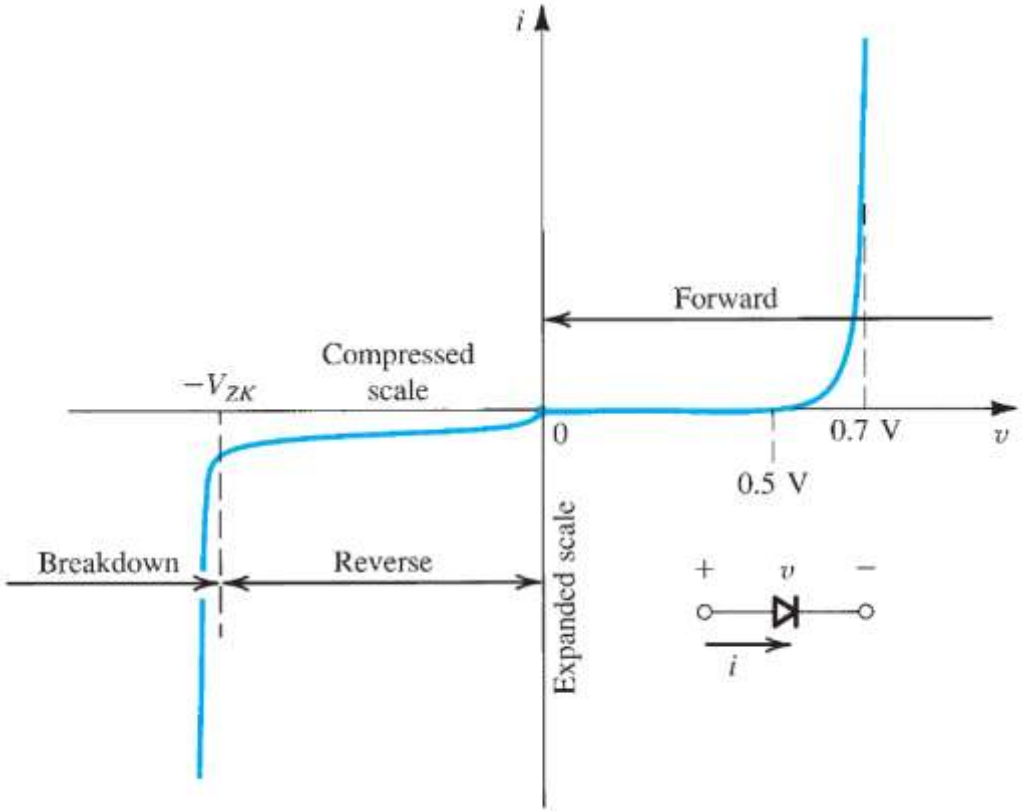

- ✓ The forward-bias region, determined by $v > 0$
- ✓ The reverse-bias region, determined by $v < 0$
- ✓ The breakdown region, determined by $v < -V_{ZK}$

The Forward Bias Region

- The forward-bias—or simply forward—region of operation is entered when the terminal voltage v is positive.
- I-V relationship is approximated as:

$$i = I_S(e^{\frac{v}{v_T}} - 1)$$

- I_S is is a constant for a given diode at a given temperature and termed as the Saturation Current which is directly proportional to the cross-sectional area of the diode
- v_T is called the thermal voltage

$$v_T = \frac{kT}{q}$$

k= Boltzmann's constant
T= Temperature in Kelvin
q=electron charge

- At 20^oC $v_T \sim 25mV$

The Forward Bias Region

- For $i \gg I_S$

$$i \approx I_S e^{\frac{v}{v_T}}$$

Example Problem:
A silicon diode said to be a 1-mA device displays a forward voltage of 0.7 V at a current of 1 mA. Evaluate the junction scaling constant I_s. What scaling constants would apply for a 1-A diode of the same manufacture that conducts 1 A at 0.7 V?

The Reverse Bias Region

- When v is negative and $|v| \gg v_T$

$$i \approx -I_S$$

- Implies that, current in the reverse direction is constant and equal to I_S. Due to this constancy, this current is called the Saturation current
- This reverse current is also called leakage current

The Breakdown Region

- The breakdown region is entered when the magnitude of the reverse voltage exceeds a threshold value that is specific to the particular diode, called the breakdown voltage.
- This is the voltage at the “knee” of the i–v curve and is denoted v_{ZK}, where the subscript Z stands for Zener and K denotes knee.
- As can be seen in the breakdown region the reverse current increases rapidly, with the associated increase in voltage drop being very small.

Graphical Analysis using the exponential model

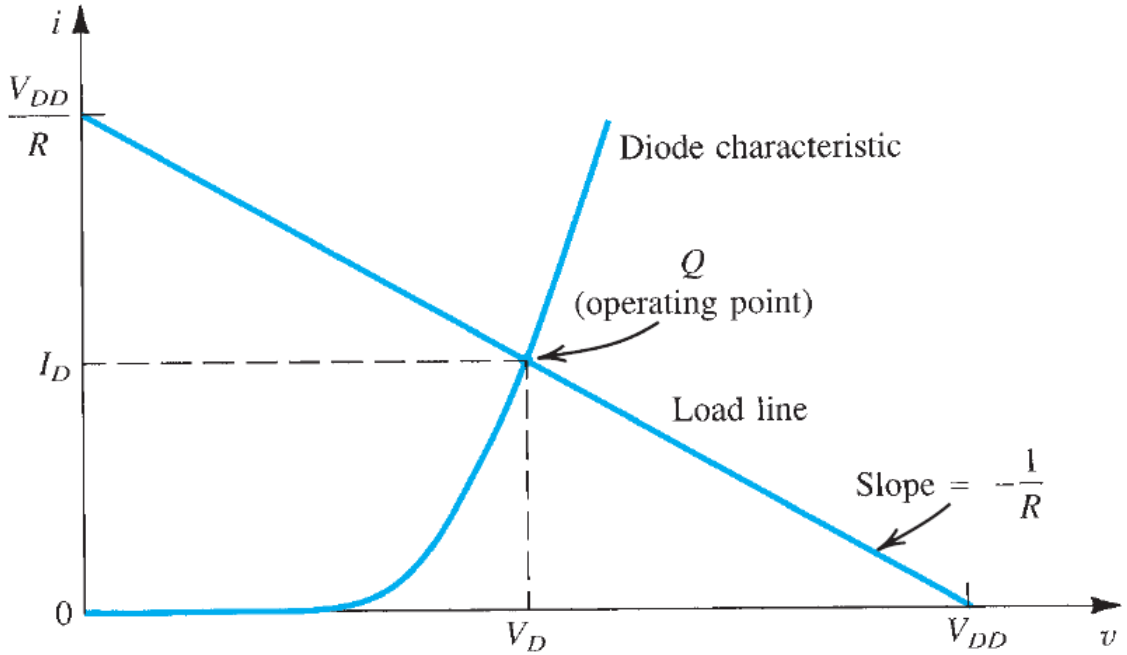

Example

Determine the current I_D and the diode voltage V_D for the circuit in Fig. 4.10 with $V_{DD} = 5$ V and $R = 1k\Omega$. Assume that the diode has a current of 1 mA at a voltage of 0.7 V.

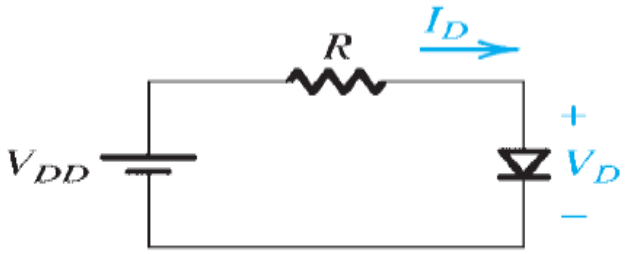

ECE113- Basic Electronics

Lecture 24: Diode

Dr. Sanat K Biswas, Assistant Professor

Office: B602, Research and Development Block

Email: sanat@iiitd.ac.in

INDRAPRASTHA INSTITUTE *of*
INFORMATION TECHNOLOGY
DELHI

Zener Diode

- Zener diodes are specifically designed to operate in breakdown region
- Useful for designing voltage regulator

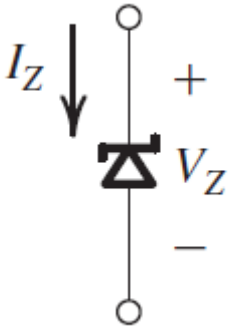

Zener Diode

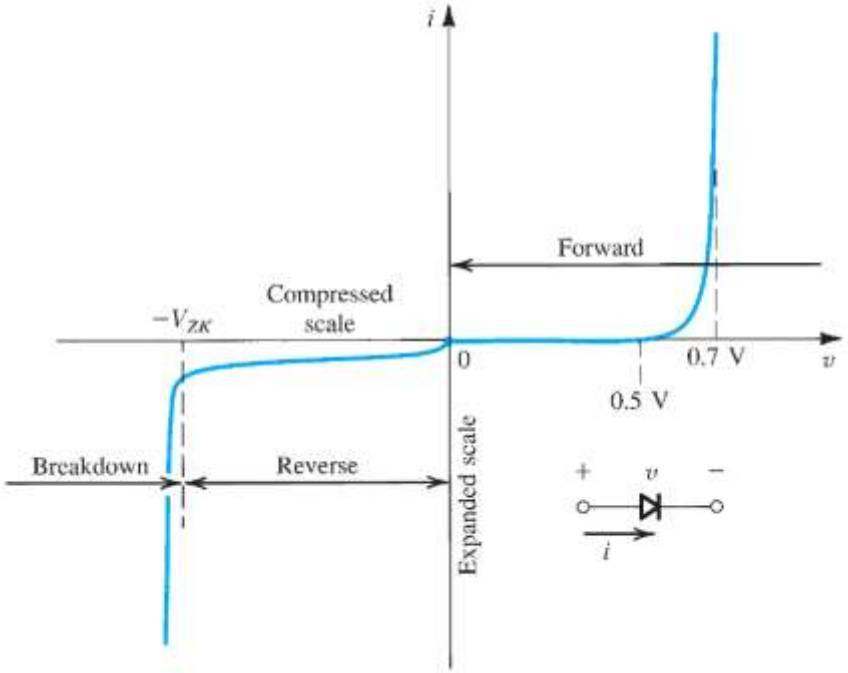

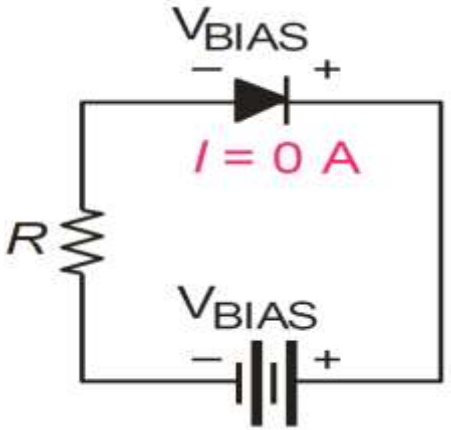

Zener Diode operation

Operates in the break-down region

- The very steep i–v curve that the diode exhibits in the breakdown region and the almost-constant voltage drop suggest that diodes operating in the breakdown region can be used in the design of voltage regulators.
- Voltage regulators are circuits that provide a constant dc output voltage **irrespective of changes** in their load current (with certain limits)
- Such diodes are called breakdown diodes or, more commonly, as noted earlier, **Zener diodes**

i-v relationship

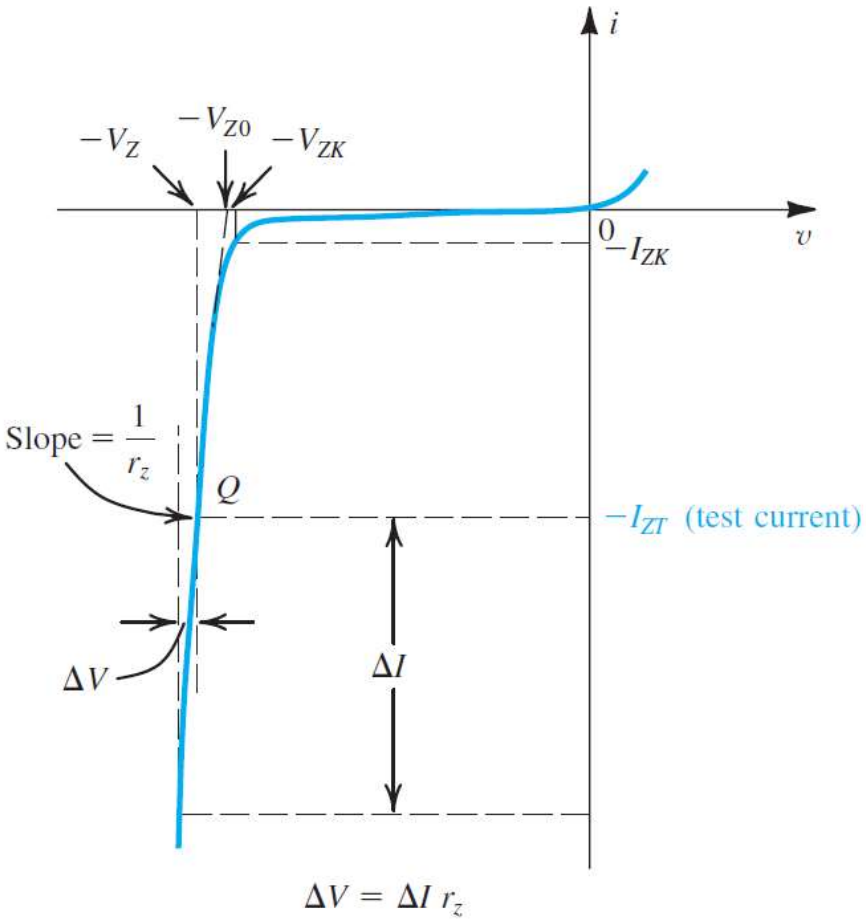

- The Figure shows details of the diode i–v characteristic in the breakdown region
- It can be observed that for a reverse current greater than the knee current I_{ZK}(usually specified on the data sheet of the Zener diode), the i–v characteristic is almost a straight line. The manufacturer usually specifies the voltage across the Zener diode V_z at a specified test current, I_{ZT}.

i-v relationship

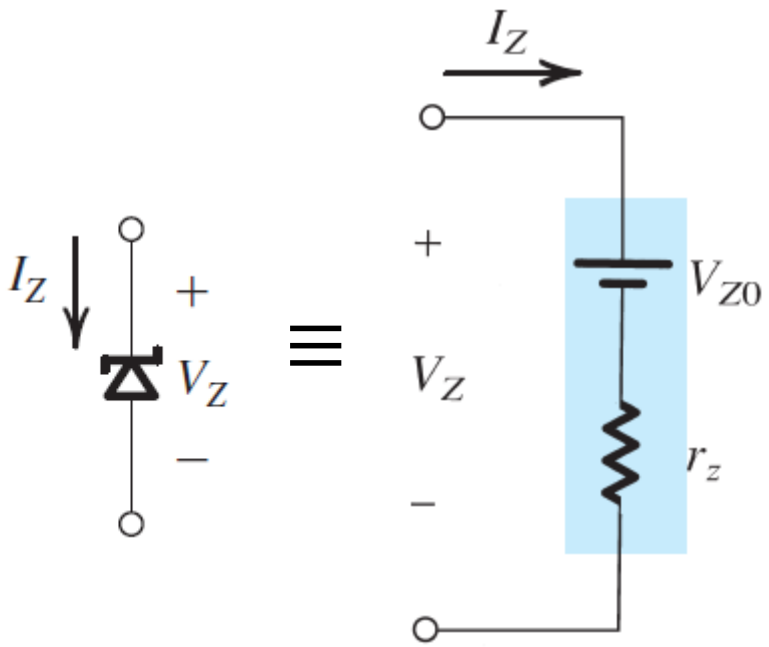

- Zener diode model:

$$\Delta V = r_z \Delta I$$

- r_Z is the inverse of the slope of the almost-linear i–v curve at point Q.
- Resistance r_Z is the incremental resistance of the zener diode at operating point Q
- The lower the value of r_Z, the more constant the zener voltage remains as its current varies, and thus the more ideal its performance becomes in the design of voltage regulators.
- Equivalent Model:

$$V_Z = V_{Z0} + r_z I_Z$$

it applies for $I_Z > I_{ZK}$ and, obviously, $V_Z > V_{Z0}$

Example

The 6.8-V zener diode in the circuit of Fig. 4.19(a) is specified to have $V_Z = 6.8$ V at $I_Z = 5$ mA, $r_z = 20\ \Omega$, and $I_{ZK} = 0.2$ mA. The supply voltage V^+ is nominally 10 V but can vary by ±1 V.

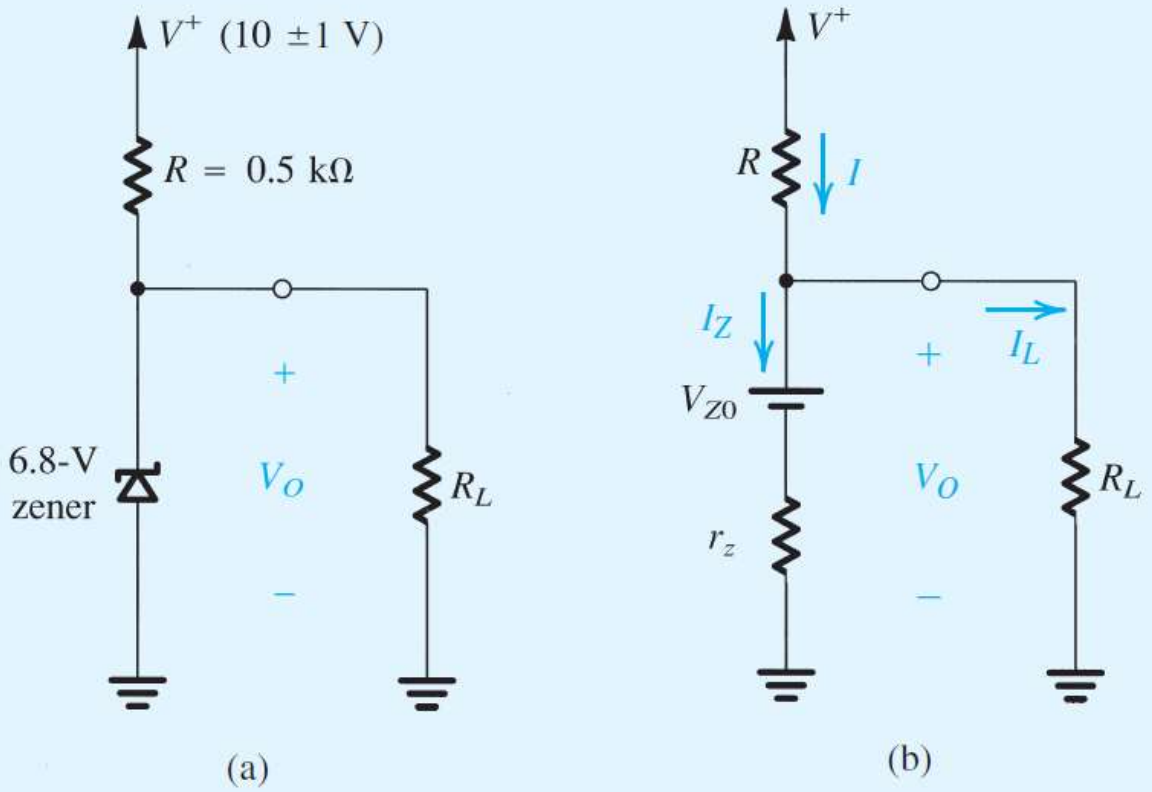

Example

(a) Find V_O with no load and with V^+ at its nominal value.
(b) Find the change in V_O resulting from the ±1-V change in V^+. Note that $(\Delta V_O/\Delta V^+)$, usually expressed in mV/V, is known as **line regulation**.
(c) Find the change in V_O resulting from connecting a load resistance R_L that draws a current I_L = 1 mA, and hence find the **load regulation** $(\Delta V_O/\Delta I_L)$ in mV/mA.
(d) Find the change in V_O when $R_L = 2$ kΩ.
(e) Find the value of V_O when $R_L = 0.5$ kΩ.
(f) What is the minimum value of R_L for which the diode still operates in the breakdown region?

Example cont.

Example cont.

Example cont.

Example cont.

ECE113- Basic Electronics

Lecture 25: Half Wave Rectifier

Dr. Sanat K Biswas, Assistant Professor

Office: B602, Research and Development Block

Email: sanat@iiitd.ac.in

INDRAPRASTHA INSTITUTE *of*
INFORMATION TECHNOLOGY
DELHI

Rectifier circuits

- Rectifier circuit converts AC supply to DC supply
- Essential for any DC power supply equipment

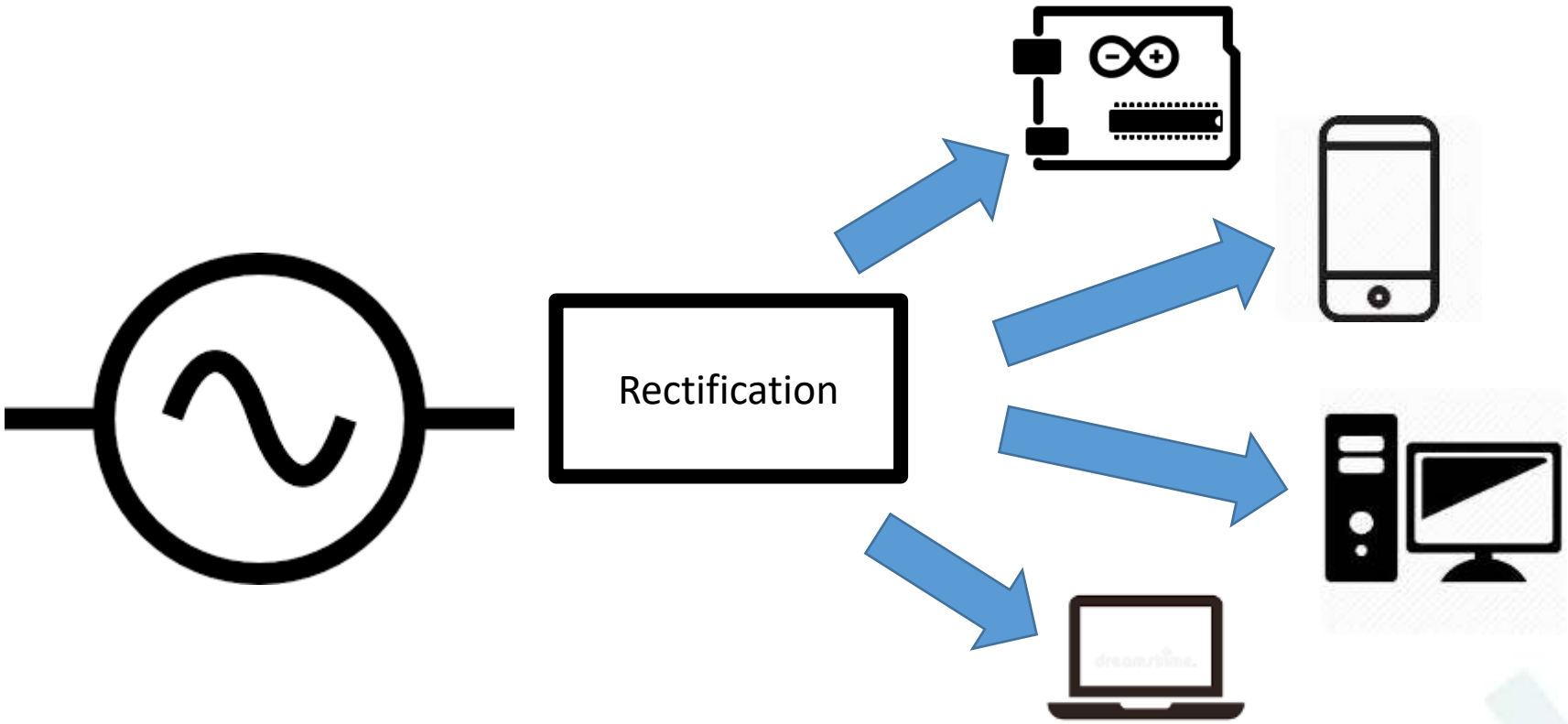

Rectifier Circuit

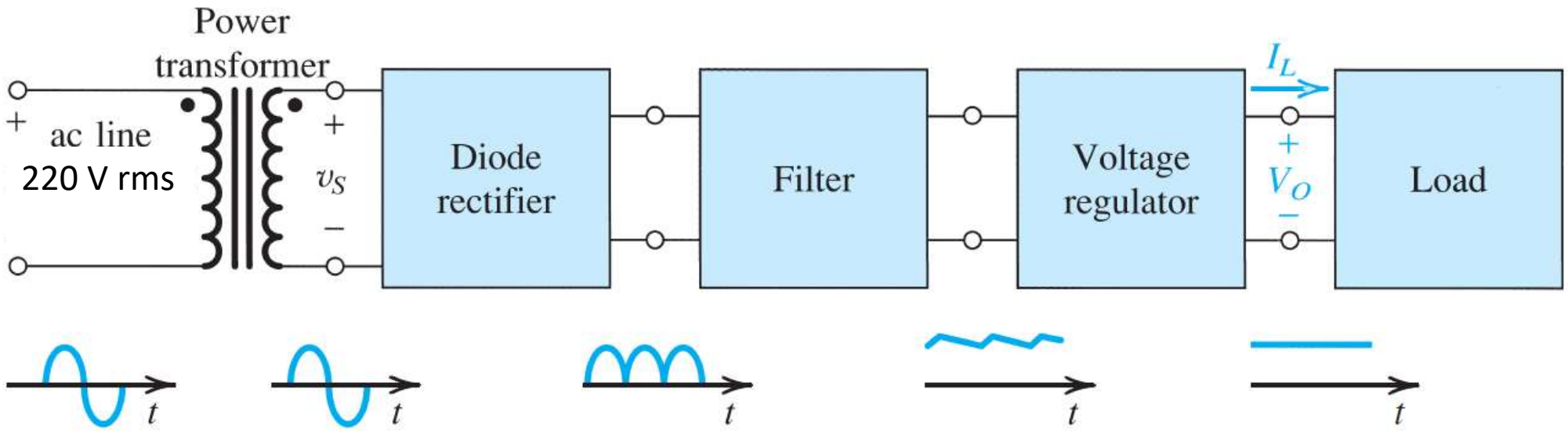

Simple Half Wave Rectifier

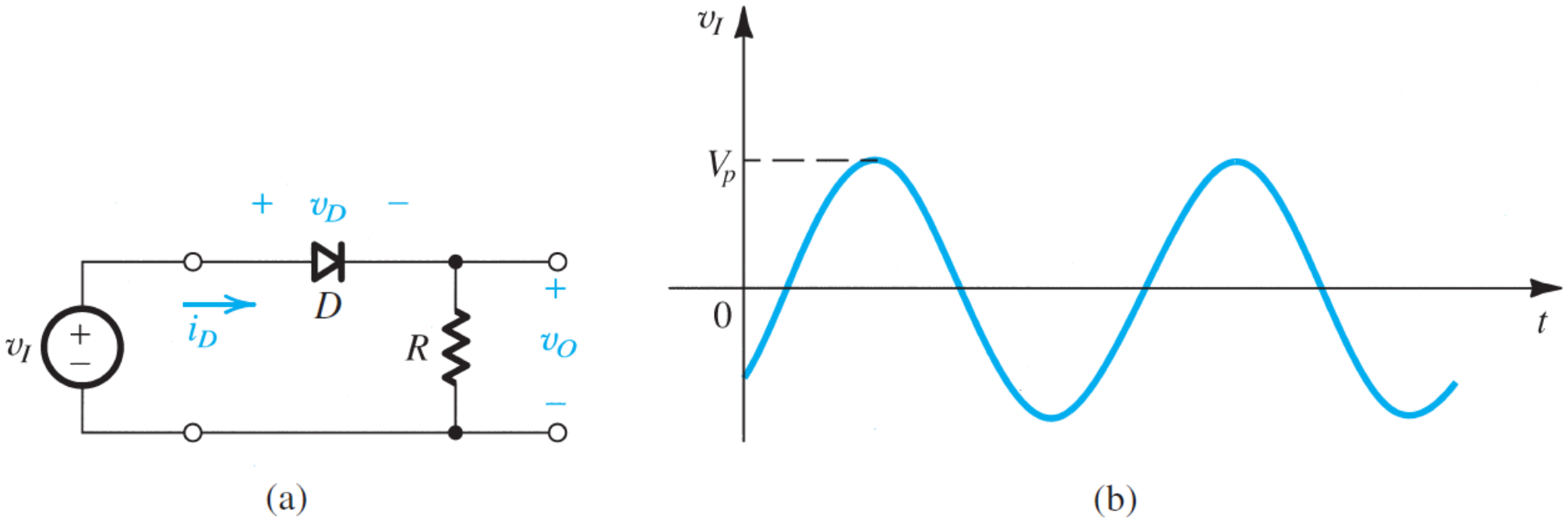

Simple Half Wave Rectifier

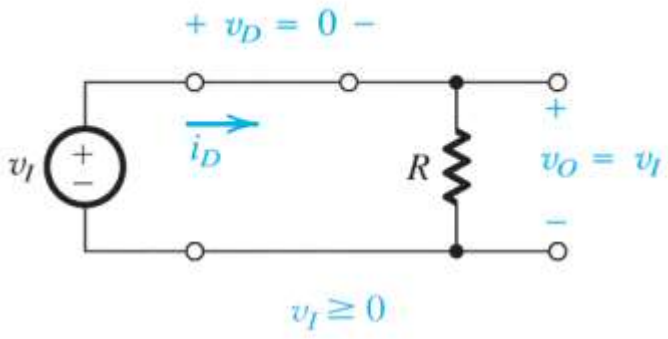

(c)

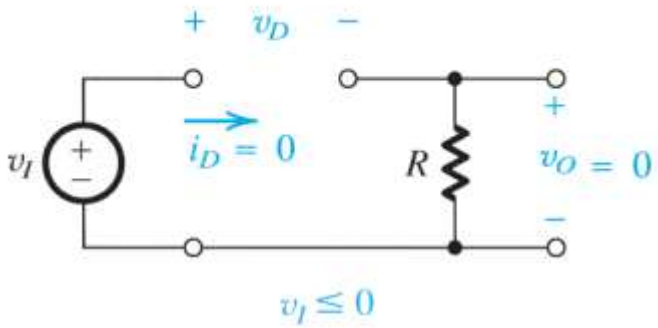

(d)

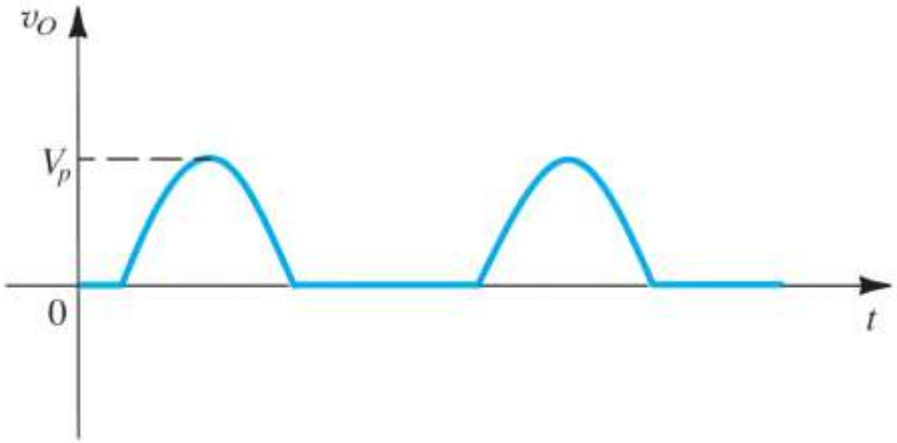

(e)

Half Wave Rectifier (non-ideal case)

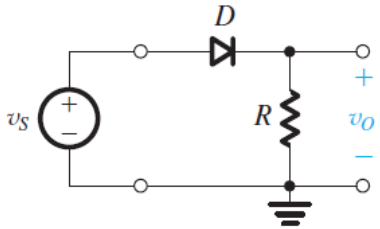

(a)

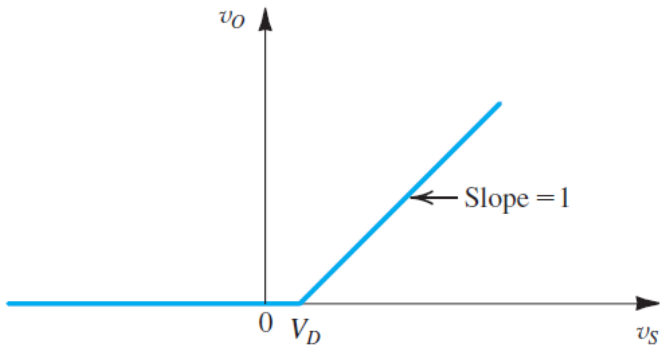

(b)

$$v_O = 0, \qquad v_S < V_D$$

$$v_O = v_S - V_D, \qquad v_S \geq V_t$$

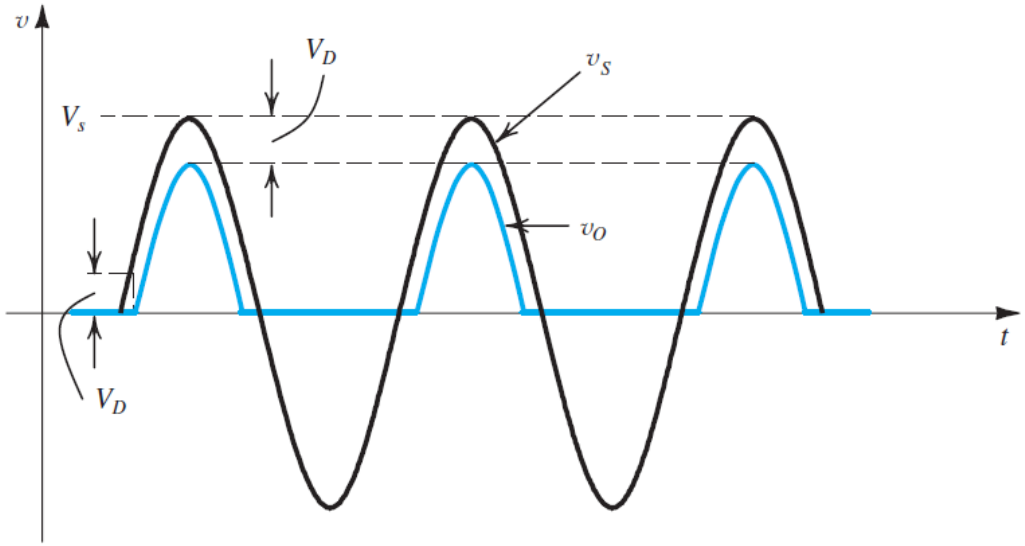

(c)

Example problem

For the half-wave rectifier circuit in Fig. 4.21(a), show the following: (a) For the half-cycles during which the diode conducts, conduction begins at an angle $\theta = \sin^{-1}(V_D/V_s)$ and terminates at $(\pi - \theta)$, for a total conduction angle of $(\pi - 2\theta)$. (b) The average value (dc component) of v_O is $V_O \simeq (1/\pi)V_s - V_D/2$. (c) The peak diode current is $(V_s - V_D)/R$).
Find numerical values for these quantities for the case of 12-V (rms) sinusoidal input, $V_D \simeq 0.7$ V, and $R = 100\ \Omega$. Also, give the value for PIV.

ECE113- Basic Electronics

Lecture 26: Full wave Rectifier

Dr. Sanat K Biswas, Assistant Professor

Office: B602, Research and Development Block

Email: sanat@iiitd.ac.in

INDRAPRASTHA INSTITUTE *of*
INFORMATION TECHNOLOGY
DELHI

Full wave rectifier with center tap

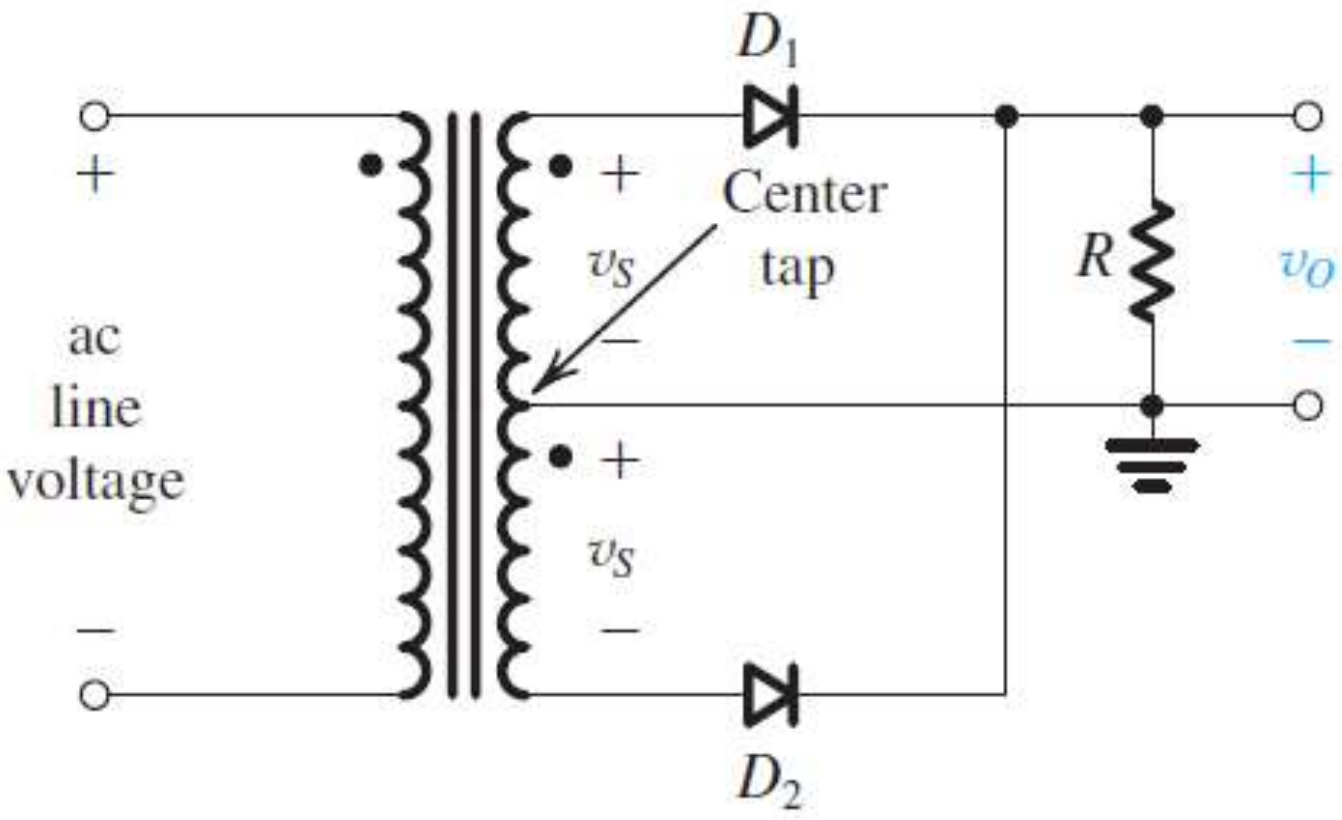

Full wave rectifier with center tap

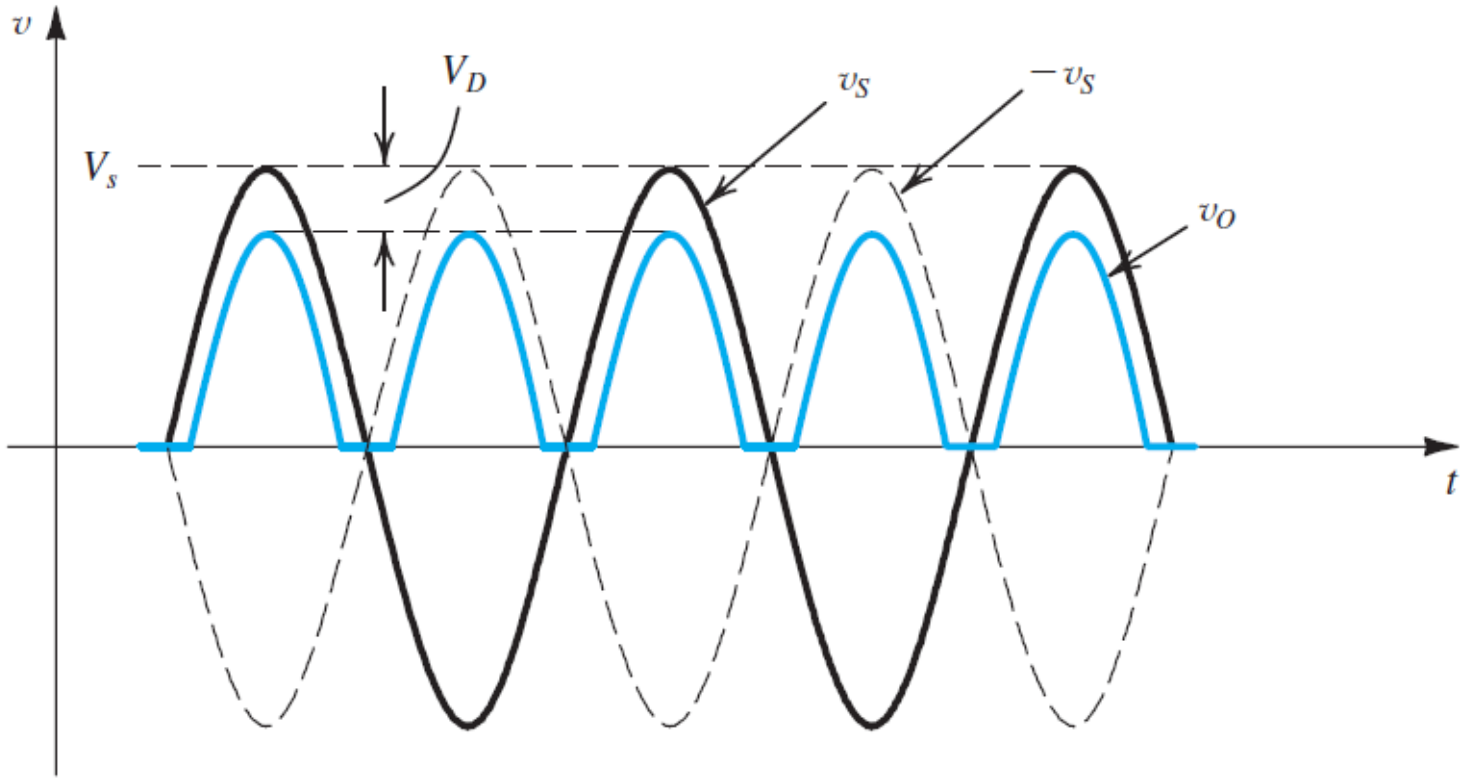

The Bridge Rectifier

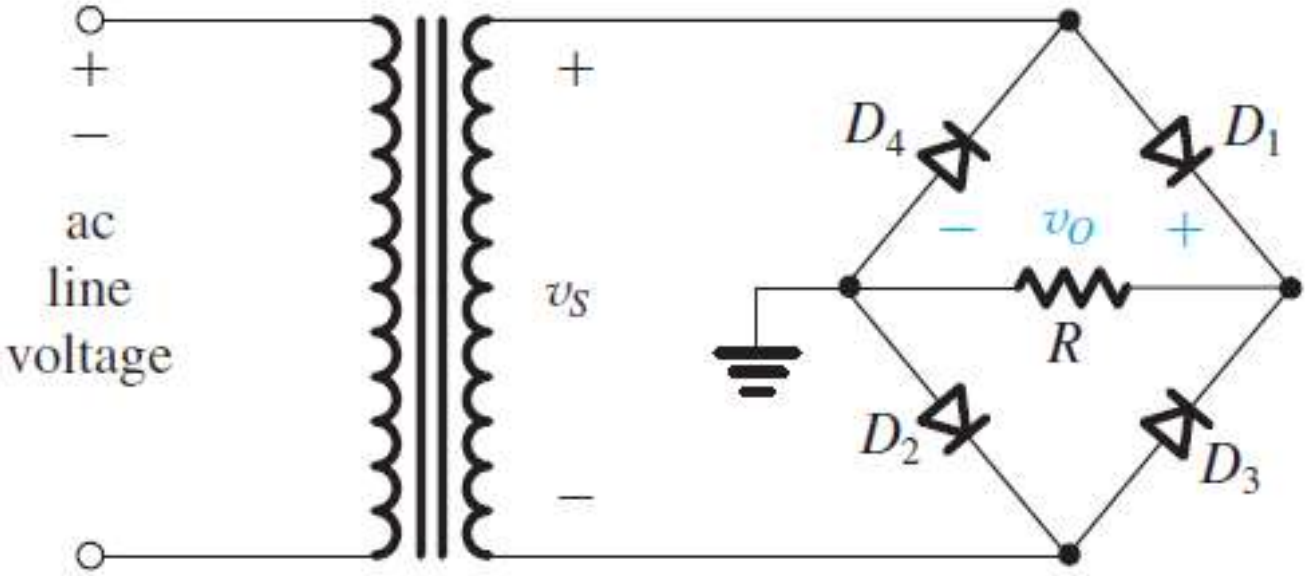

The Bridge Rectifier

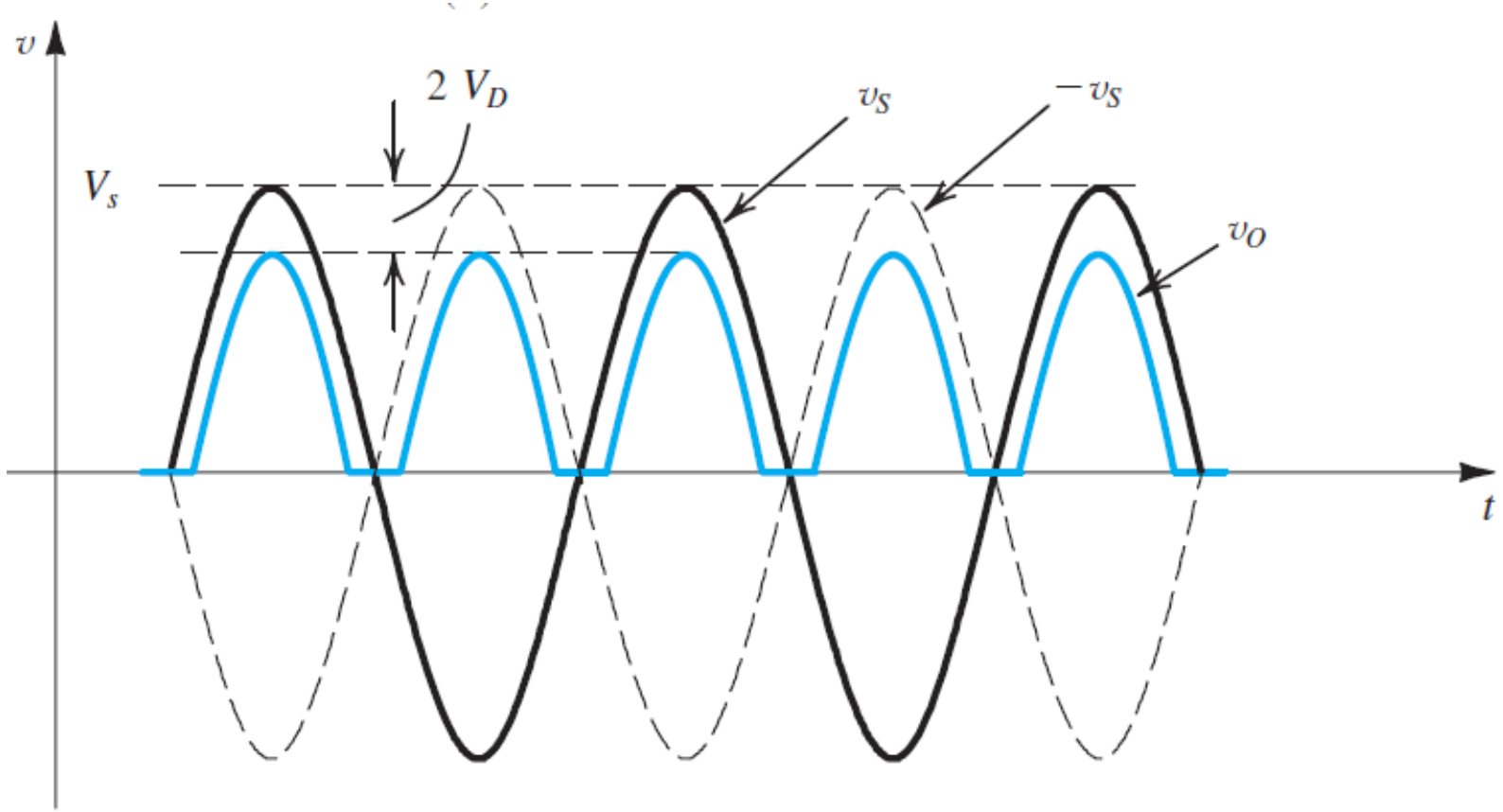

Rectifier with a filter capacitor

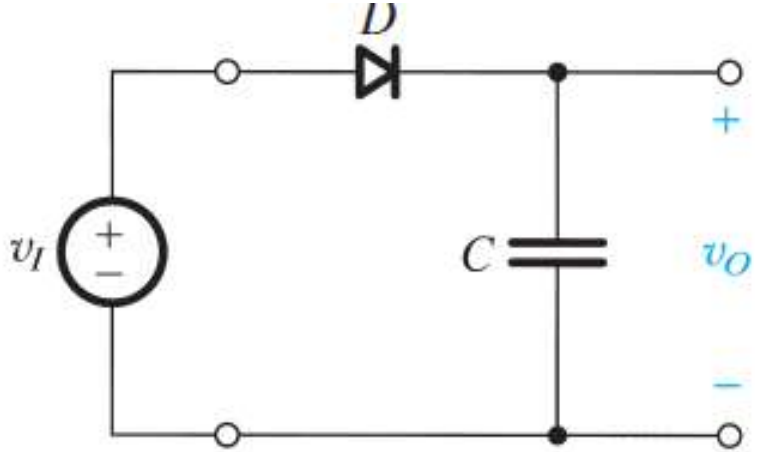

***Assume ideal diode**

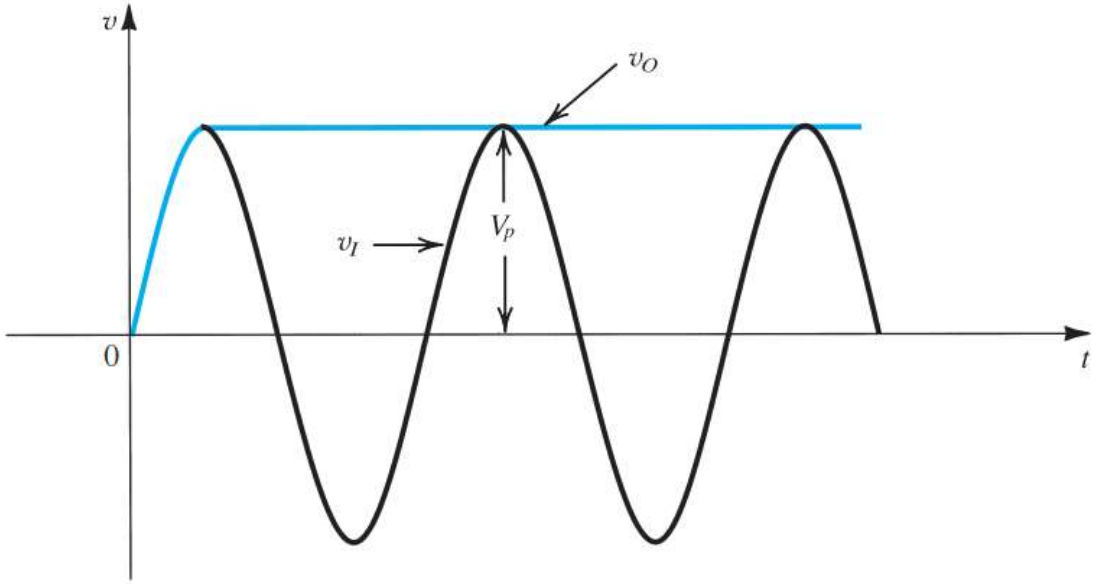

Rectifier with a filter capacitor

***Assume ideal diode**

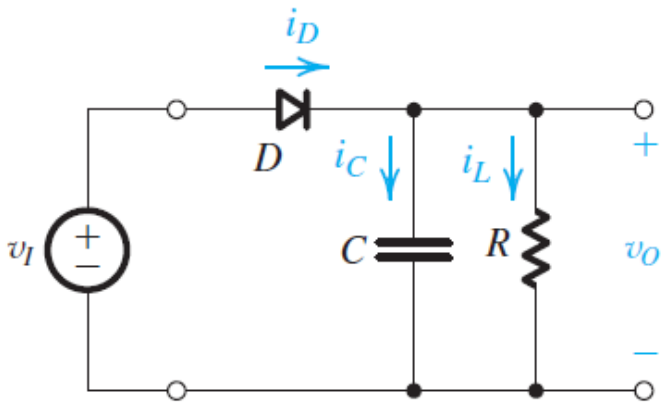

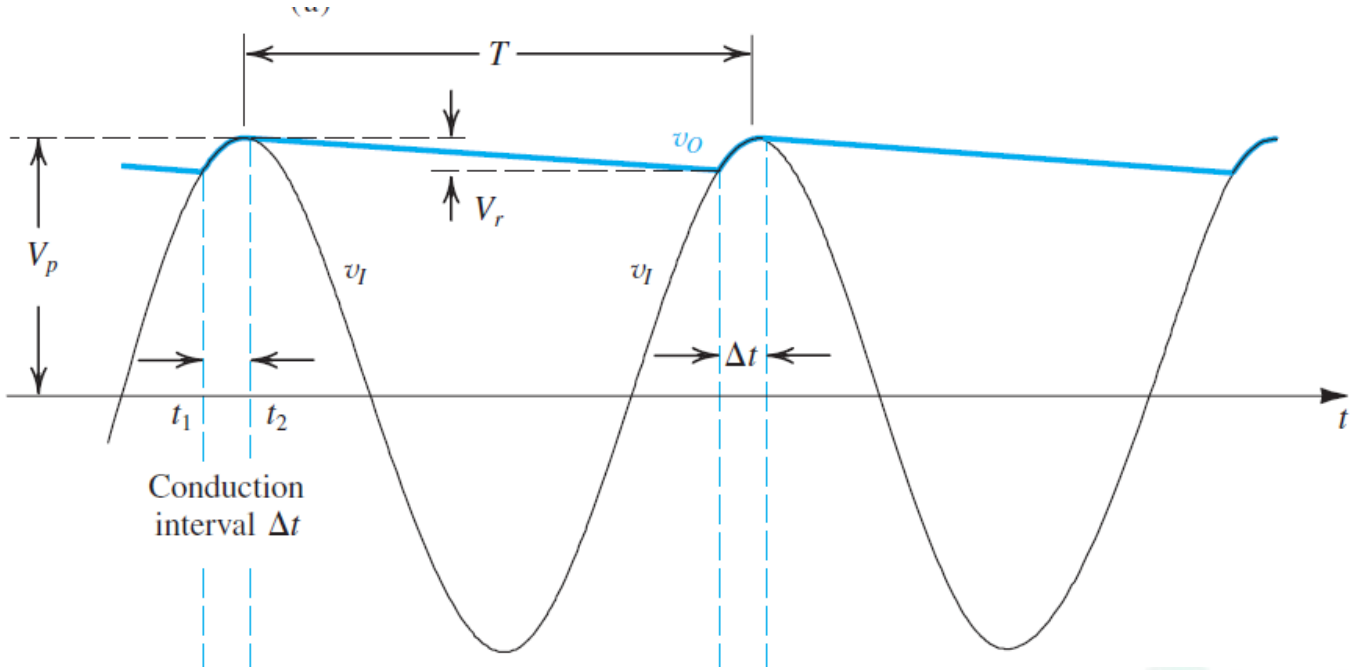

Analysis of a rectifier with filter

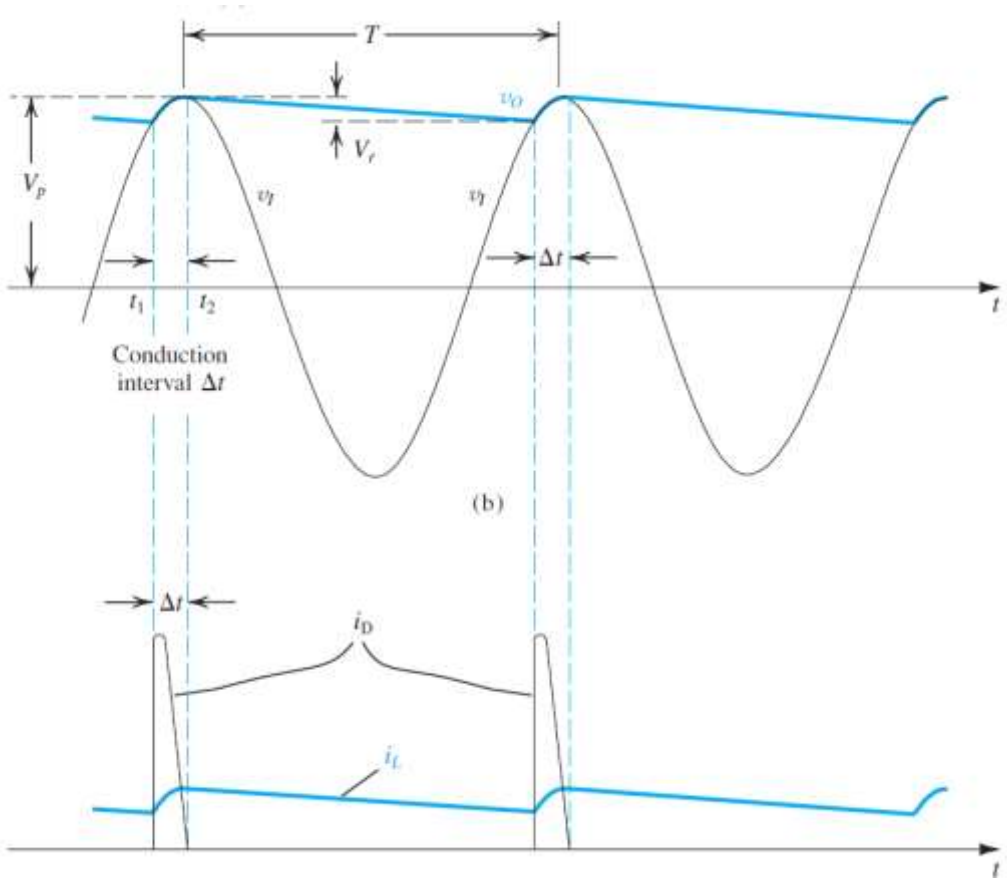

Analysis of a rectifier with filter

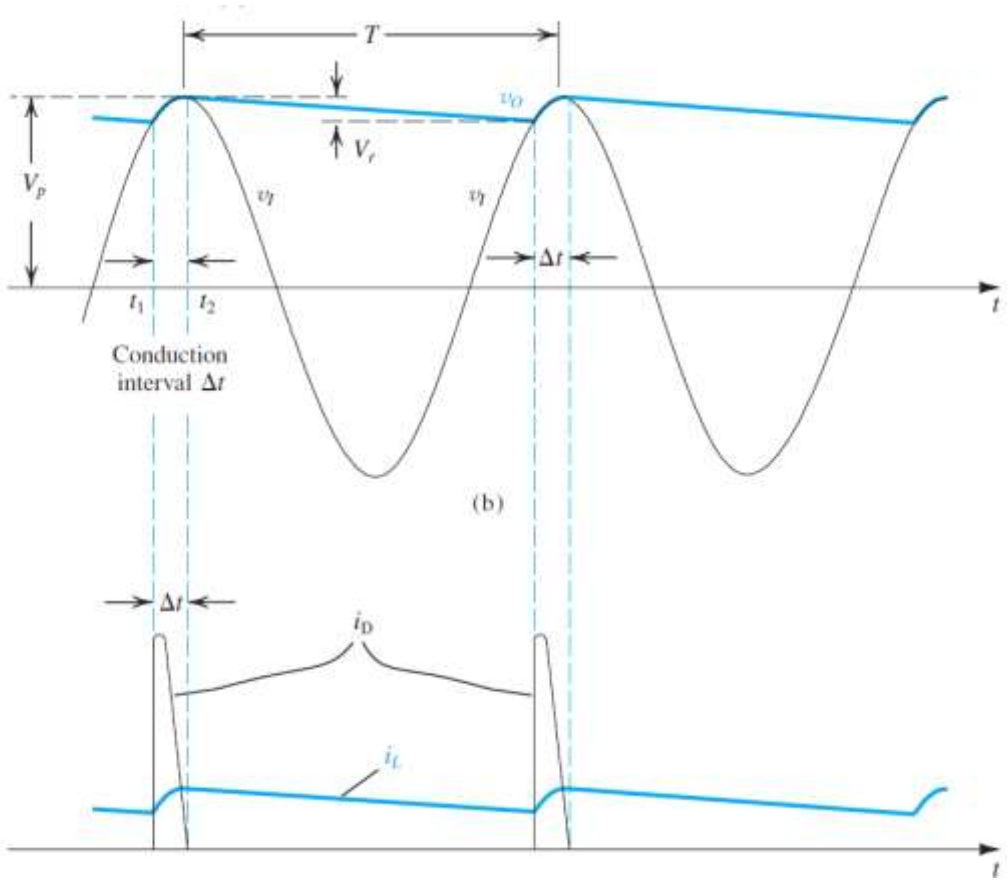

Analysis of a rectifier with filter

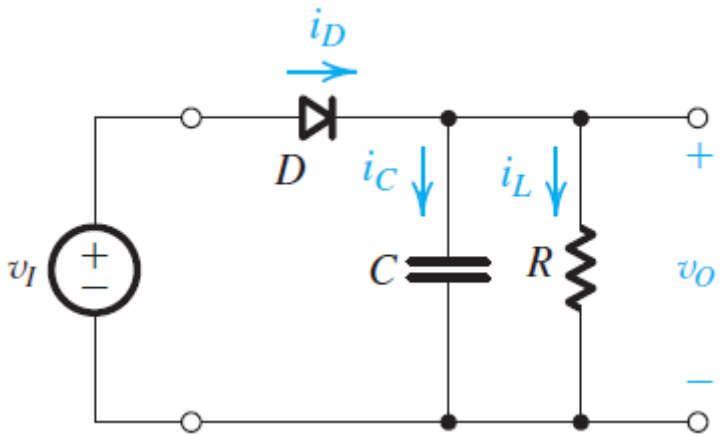

For Full wave rectifier

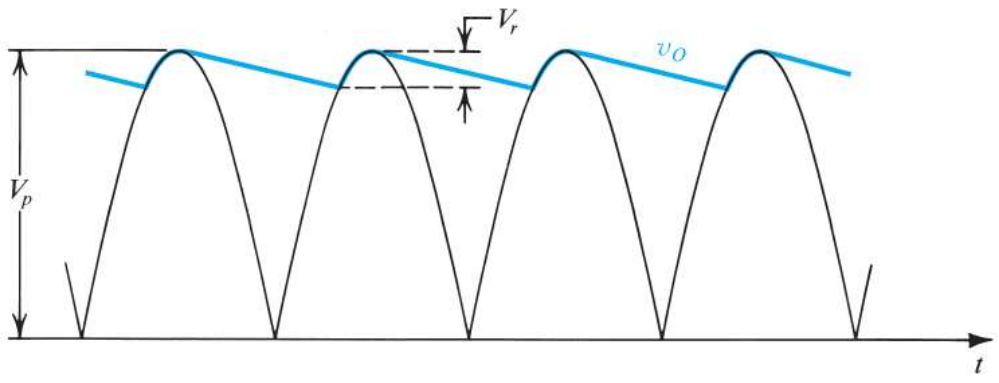

Example

Consider a peak rectifier fed by a 60-Hz sinusoid having a peak value $V_p = 100$ V. Let the load resistance $R = 10$ kΩ. Find the value of the capacitance C that will result in a peak-to-peak ripple of 2 V. Also, calculate the fraction of the cycle during which the diode is conducting and the average and peak values of the diode current.

ECE113-Basic Electronics

Lecture 27: Limiting circuit, clipper, clamper

Dr. Sanat K Biswas, Assistant Professor

Office: B602, Research and Development Block

Email: sanat@iiitd.ac.in

INDRAPRASTHA INSTITUTE *of*
INFORMATION TECHNOLOGY
DELHI

Limiter/Clipper

- Clipper circuits, also called limiter circuits, are used to eliminate portion of a signal that are above or below a specified level – clip value.
- The purpose of the diode is that when it is turn on, it provides the clip value
- As these circuits are used only for clipping input waveform as per the requirement and for transmitting the waveform, they do not contain any energy storing element like a capacitor.
- Half wave rectifiers is an example of a diode clipper

Limiter/Clipper

- For Inputs in a certain range, the limiter acts as a linear circuit, providing an output proportional to the input, $v_0 = Kv_i$
- If v_i exceeds the upper threshold , the output voltage is limited to the upper limiting level (L^+) On the other hand, if v_i is reduced below the lower limiting threshold (L^-) the output voltage v_0 is limited to the lower limiting level.

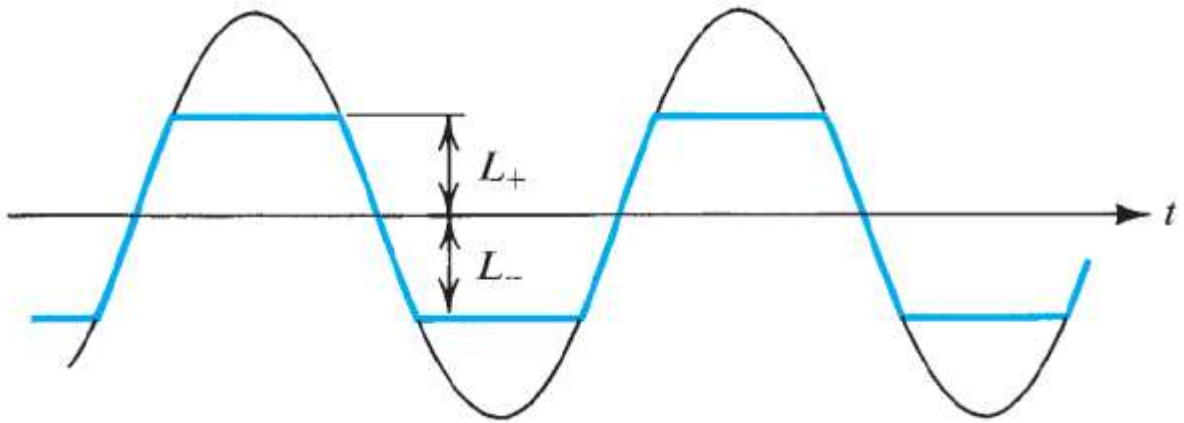

Limiting circuit

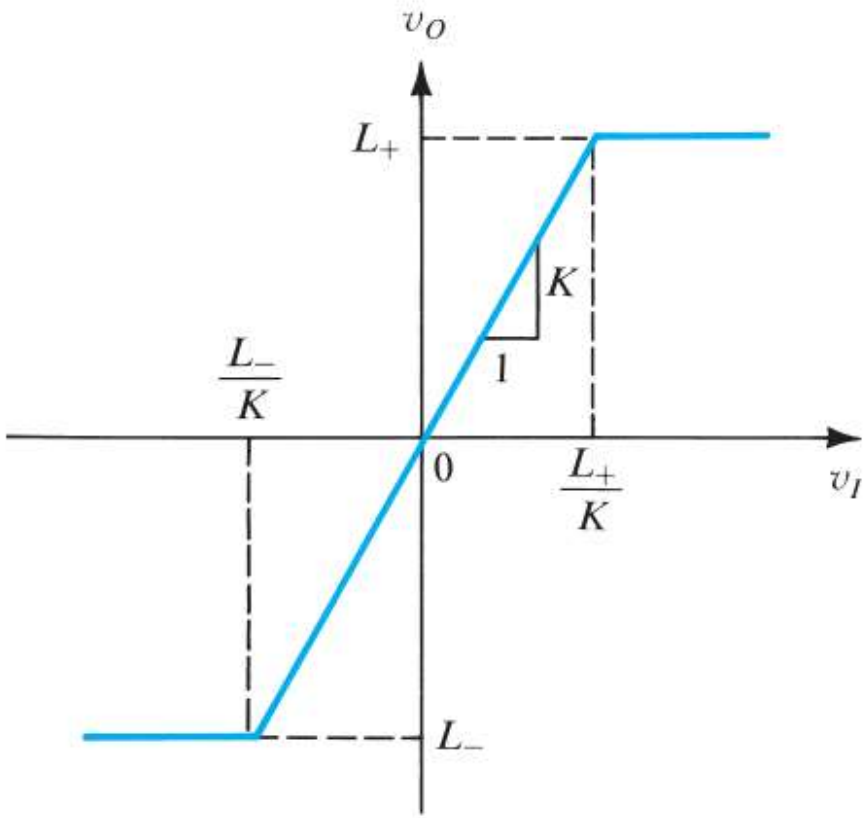

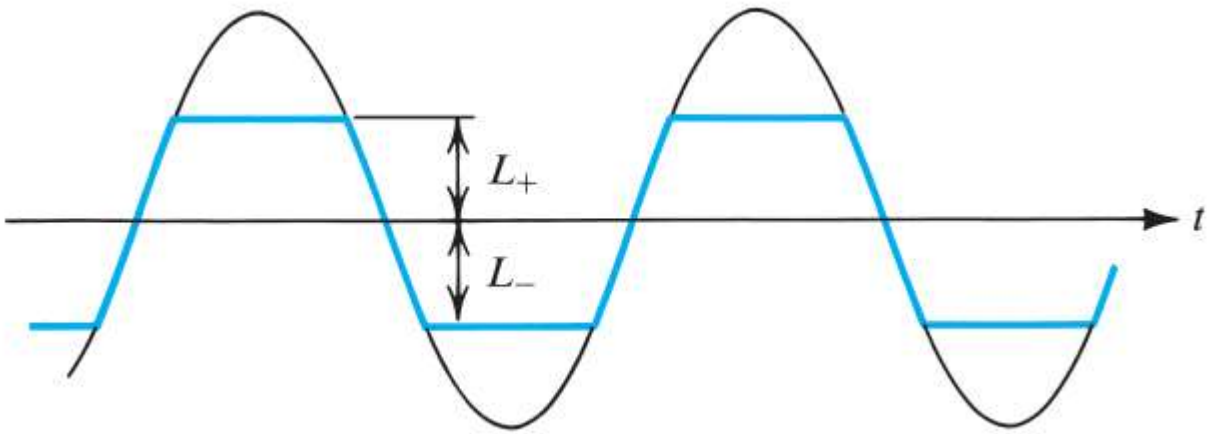

Soft limiting

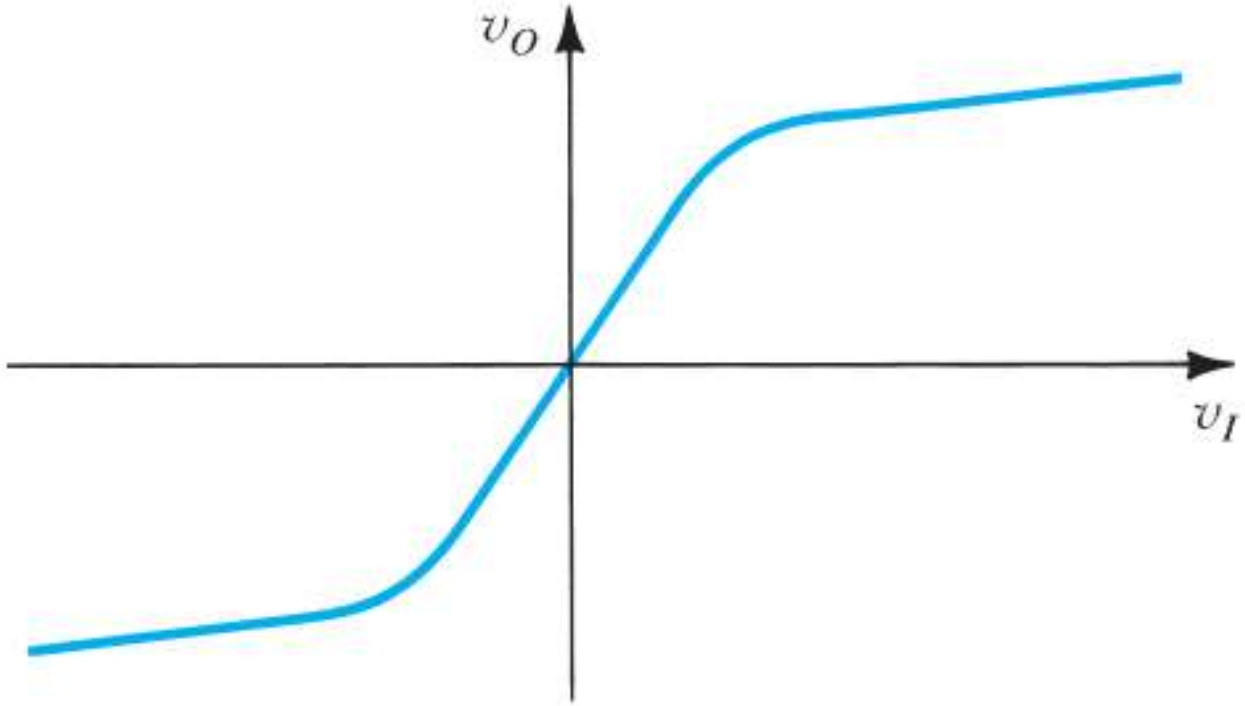

Example circuit

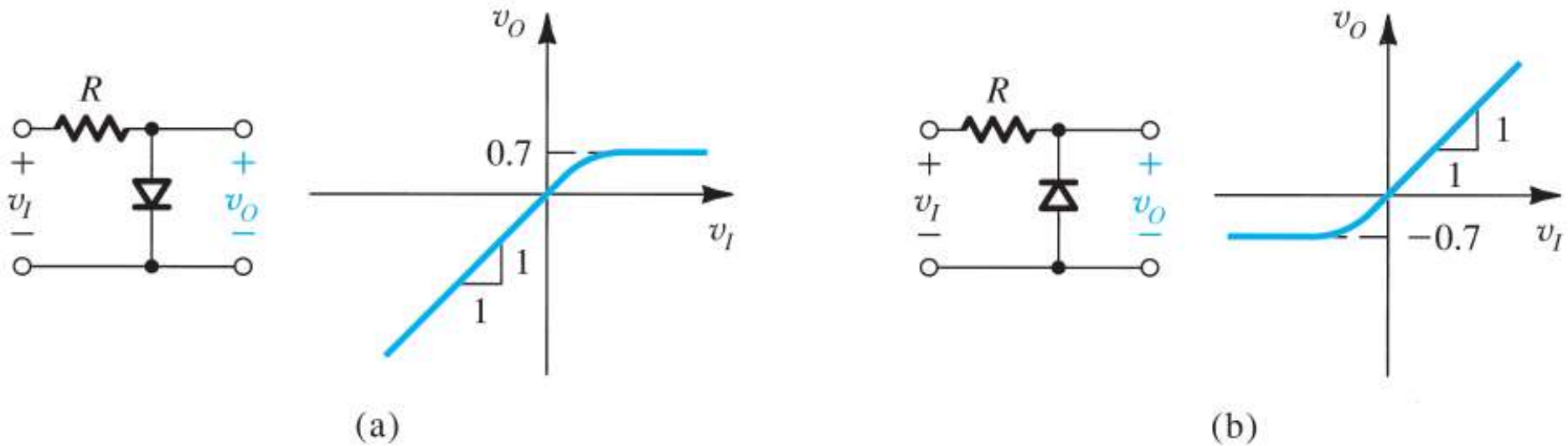

Diodes can be combined with resistors to provide simple realizations of the limiter function. In each part of the figure both the circuit and its transfer characteristic are given. The transfer characteristics are obtained using the constant-voltage-drop (V_D = 0.7 V) diode model but assuming a smooth transition between the linear and saturation regions of the transfer characteristic

Example circuit

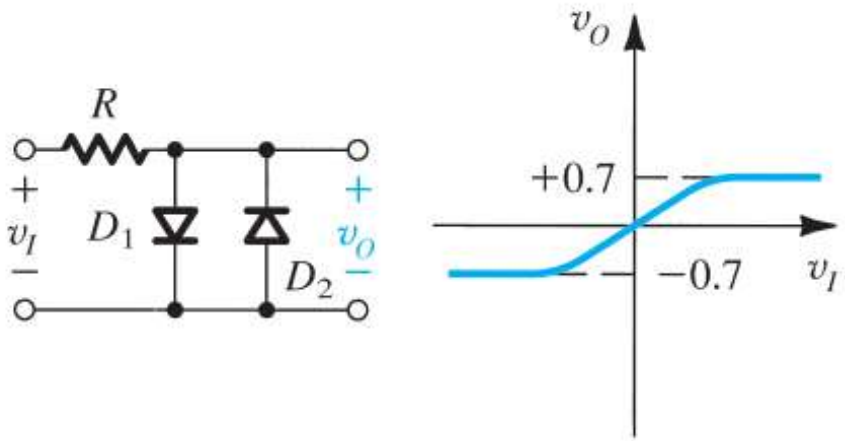

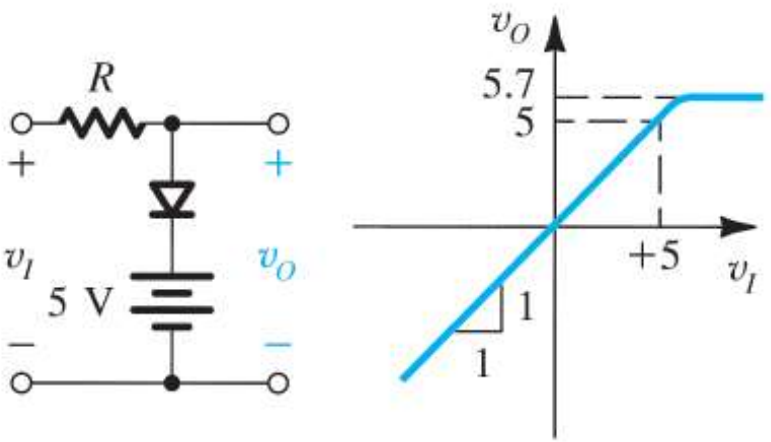

Example Circuit

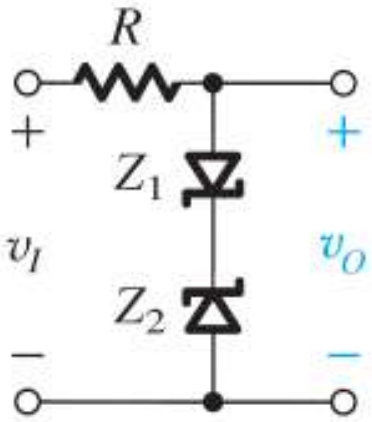

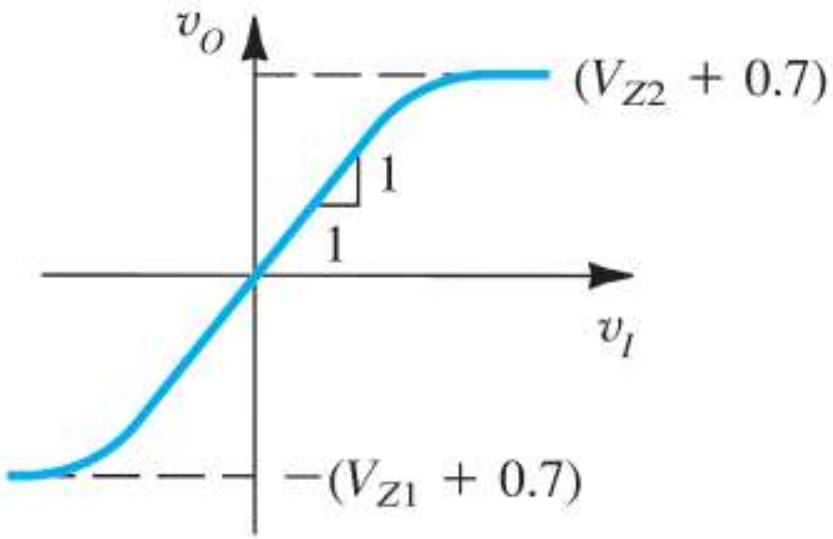

Example problem

Assuming the diodes to be ideal, describe the transfer characteristic of the circuit shown in Fig.

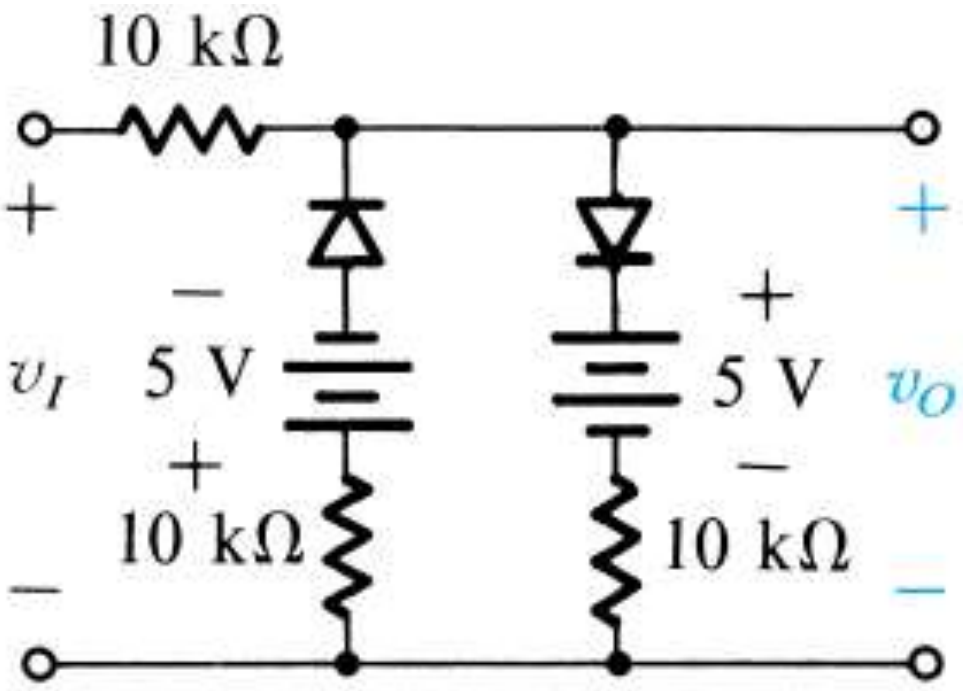

Clipper

Two main Applications

- Changing the shape of a waveform
  - For the generation of new waveforms or shaping the existing waveform, clippers are used.
  - Frequently used half wave rectifier in power supply kits is a typical example of a clipper. It clips either positive or negative half wave of the input.
- Circuit transient protection
  - The excessive noise spikes above a certain level can be limited or clipped in communication transmitters by using the series clippers.
  - The typical application of diode clipper is for the protection of transistor from transients
  - Clippers can be used as voltage limiters and amplitude selectors

Clamper circuit

- A clamper is an electronic circuit that changes the DC level of a signal to the desired level without changing the shape of the applied signal. In other words, the clamper circuit moves the whole signal up or down to set either the positive peak or negative peak of the signal at the desired level.
- The dc component is simply added to the input signal or subtracted from the input signal. A clamper circuit can add the positive dc component to the input signal to push it to the positive side. Similarly, a clamper circuit can add the negative dc component to the input signal to push it to the negative side.
- The output waveform will have a finite average value or dc component. This dc component is entirely unrelated to the average value of the input waveform.

Clamper circuit

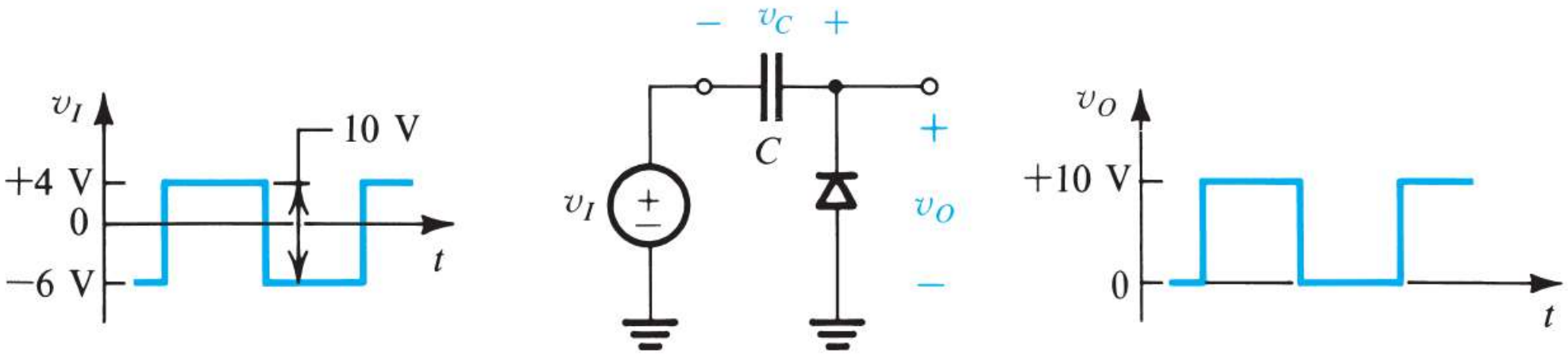

Voltage doubler

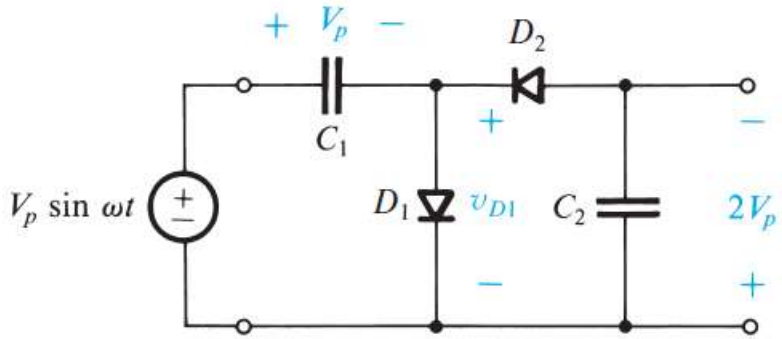

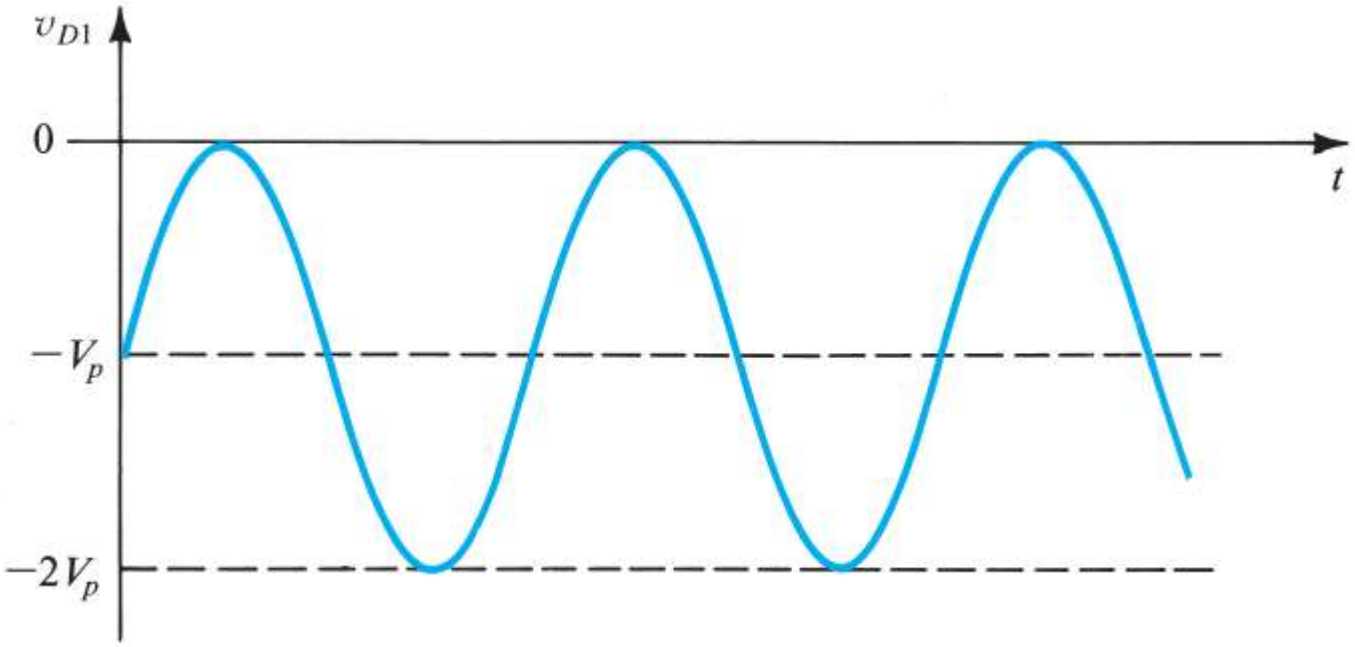

ECE113- Basic Electronics

Lecture 28: Reliable current and voltage sources using Zener diodes

Dr. Sanat K Biswas, Assistant Professor

Office: B602, Research and Development Block

Email: sanat@iiitd.ac.in

INDRAPRASTHA INSTITUTE *of*
INFORMATION TECHNOLOGY
DELHI

A reliable voltage source

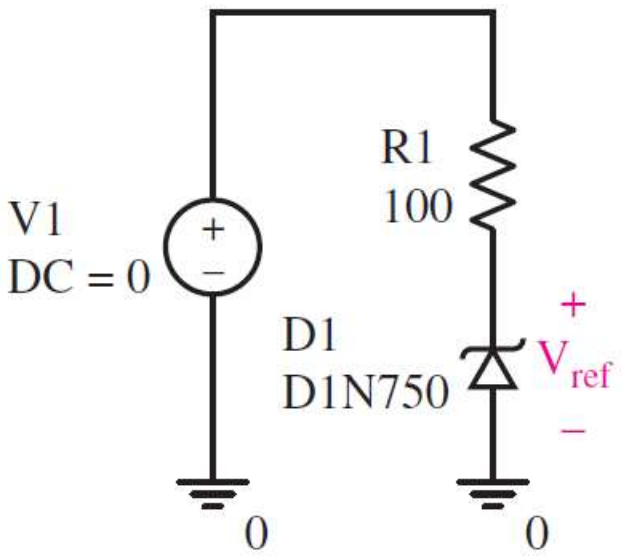

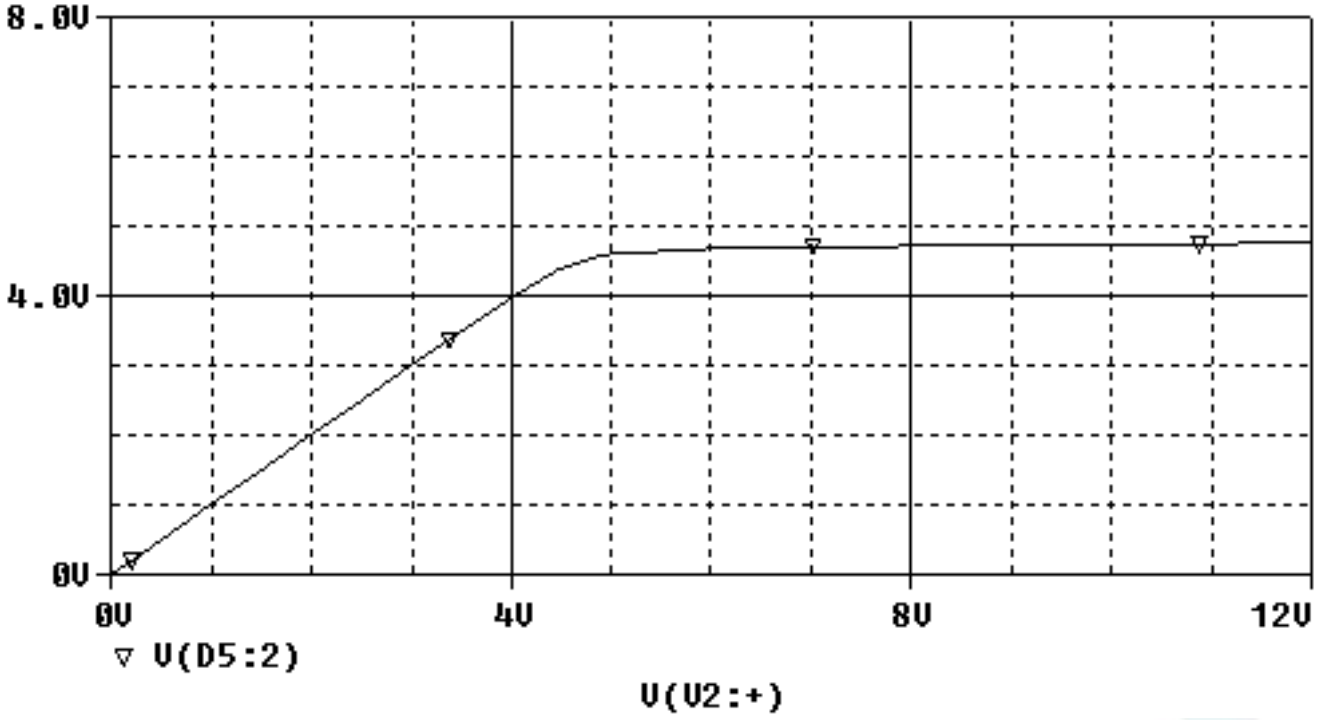

Design problem

Design a circuit based on the 1N750 Zener diode that runs on a single 9 V battery and provides a reference voltage of 4.7 V.

Current rating of 1N750 is 75 mA, Zener voltage is 4.7V

Design problem

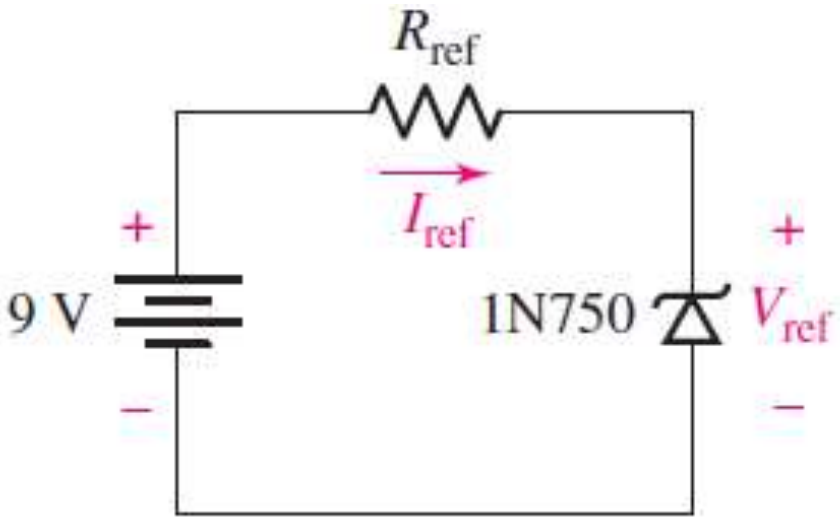

What happens if the load try to draw a lot of current (more than few mA)?

Use op-amp

Design a circuit to provide a reference voltage of 6 V using a 1N750 Zener diode and a noninverting amplifier.

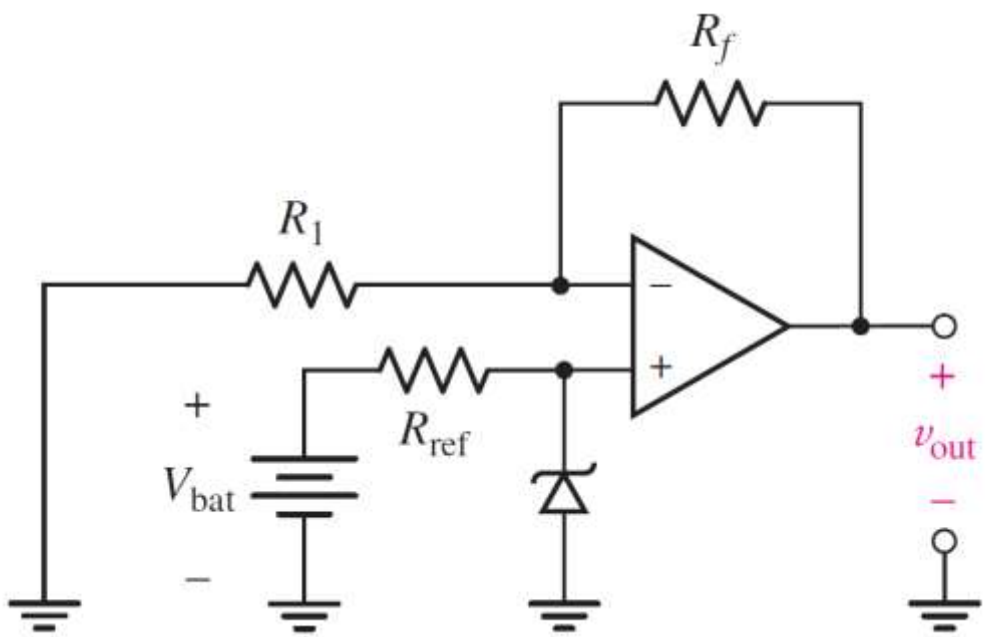

Reliable current source

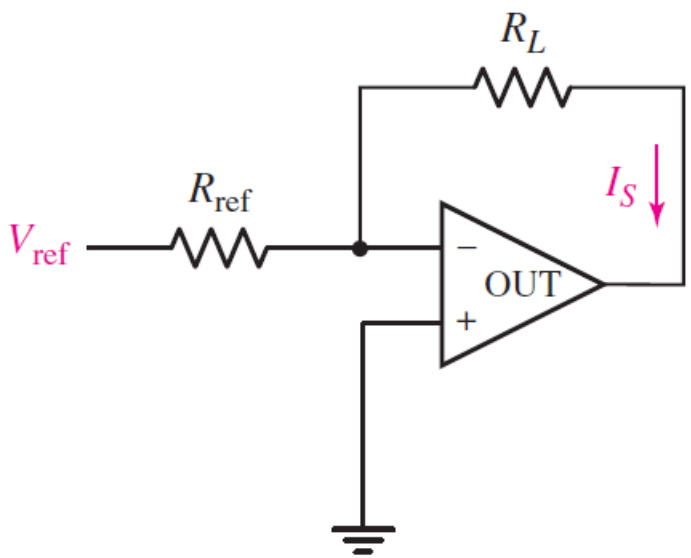

$$I_s = \frac{V_{ref}}{R_{ref}}$$

Design problem

Design a current source that will deliver 1 mA to an arbitrary resistive load.

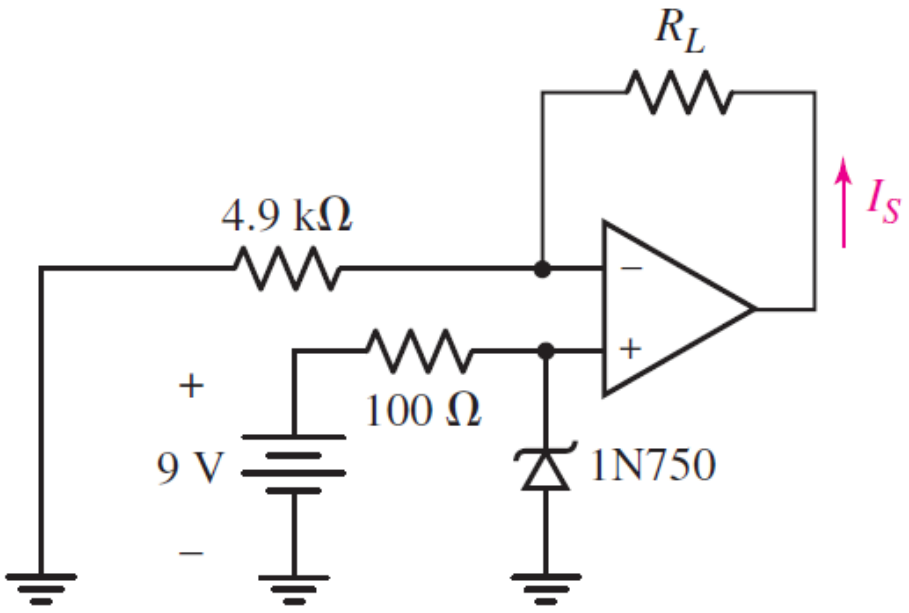

ECE113- Basic Electronics

Lecture 29: LED, Photo diodes and solar cell

Dr. Sanat K Biswas, Assistant Professor

Office: B602, Research and Development Block

Email: sanat@iiitd.ac.in

INDRAPRASTHA INSTITUTE *of*
INFORMATION TECHNOLOGY
DELHI

Light Emitting Diodes

- Unlike the light bulb in which electrical energy first converts into heat energy, the electrical energy can also be directly converted into light energy.
- In Light Emitting Diodes (LEDs), electrical energy flowing through it is directly converted into light energy.
- Light Emitting Diodes (LEDs) are the most widely used semiconductor diodes today. Light emitting diodes emit either visible light or invisible infrared light when forward biased. The LEDs which emit invisible infrared light are used for remote controls.

Discussion on p-n junction

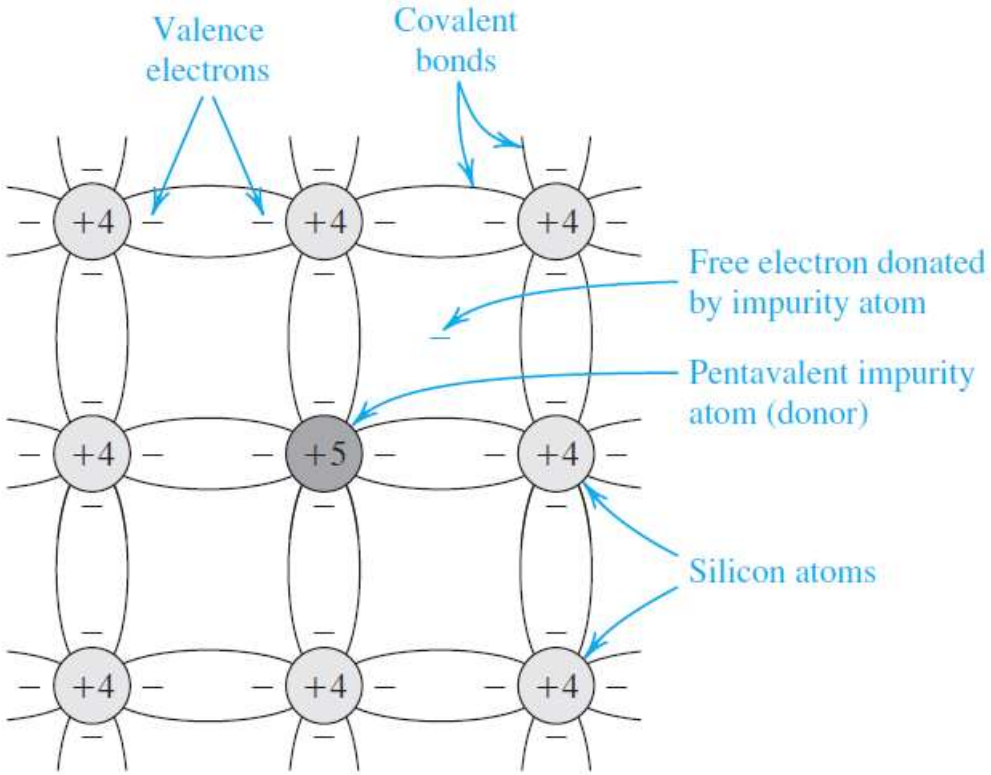

n- type

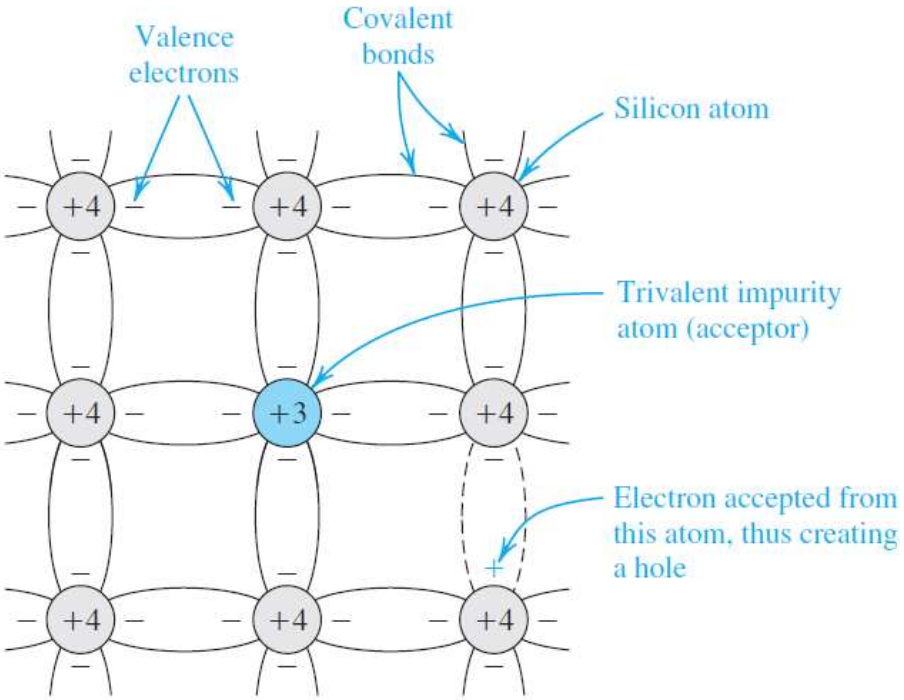

p- type

p-n junction

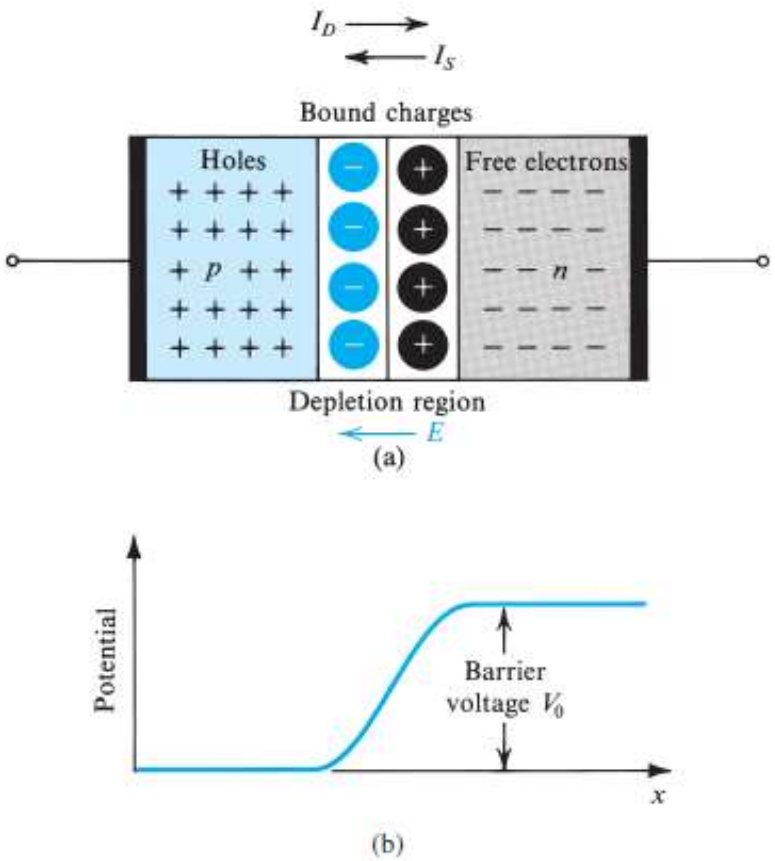

- Due to doping free electrons are available in n-type and holes are available in p-type
- When a p-n junction is created through fabrication, some free electrons diffused to the p-side, and some holes diffused to the n-side, resulting in charge imbalance.
- Net charge remains 0

Various bias conditions

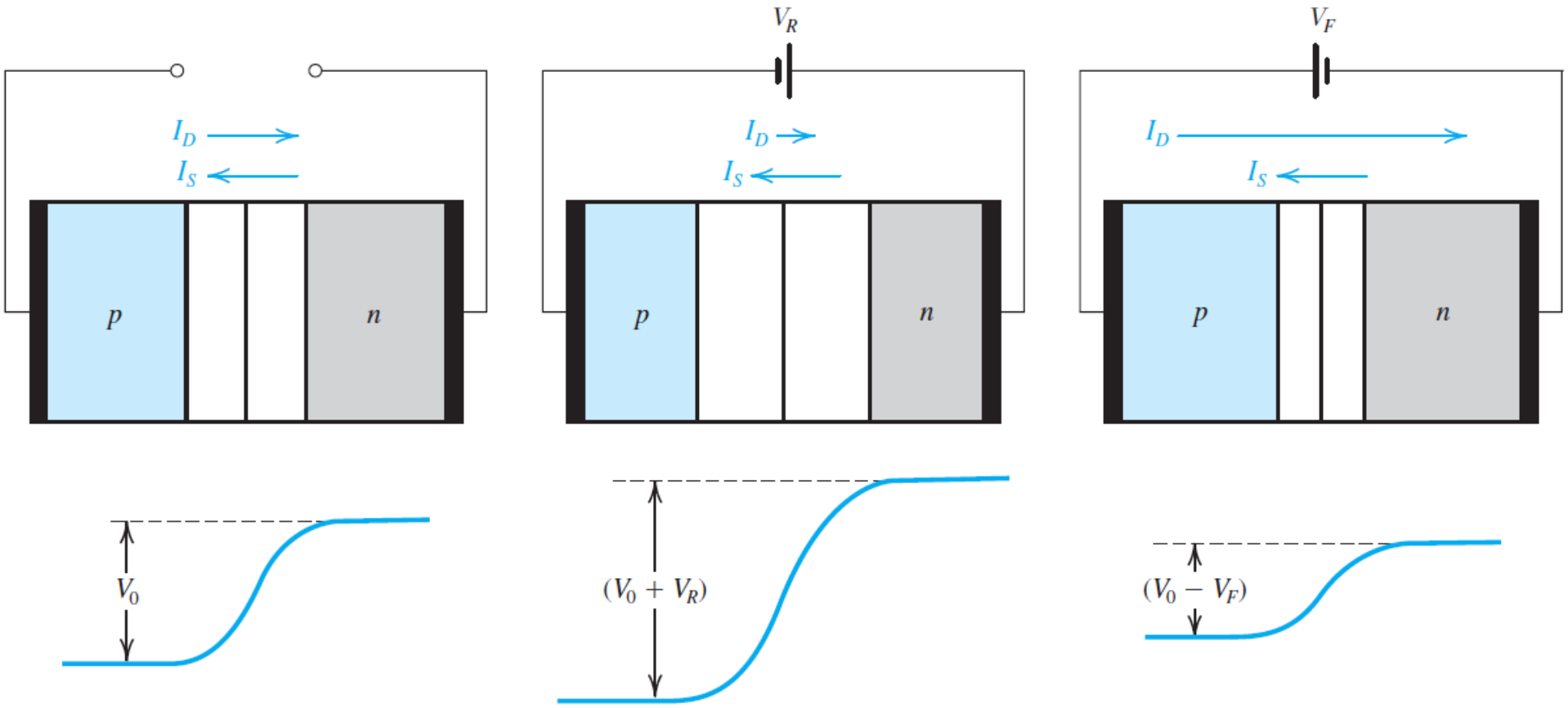

(a) Open-circuit (Equilibrium)

(b) Reverse Bias

(c) Forward Bias

Light Emitting Diode (LED)

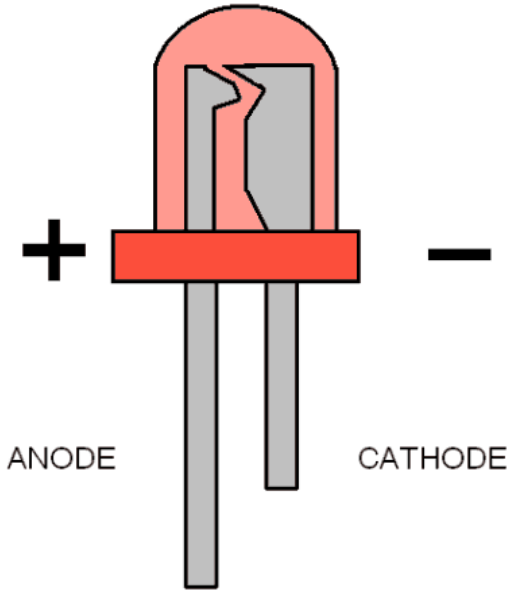

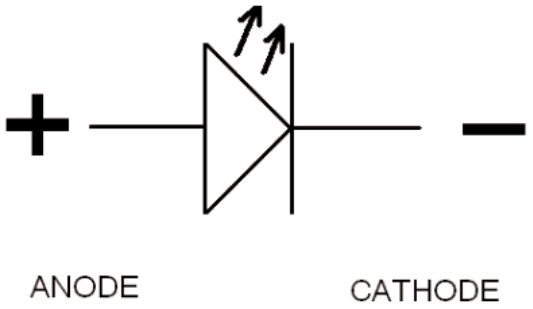

LED

- In forward bias condition, defused minority carrier recombines with the majority carrier.
- Through the recombination process, the electron releases energy governed by the Planck-Einstein equation:

$$\Delta E = h\nu$$

- Semiconductors can be designed in such a way the energy release happens in the visible region of the electromagnetic radiation

Various LED types

There are different types of light emitting diodes present and some of them are mentioned below

- Gallium Arsenide (GaAs) – infra-red
- Gallium Arsenide Phosphide (GaAsP) – red to infra-red, orange
- Aluminium Gallium Arsenide Phosphide (AlGaAsP) – high-brightness red, orange-red, orange, and yellow
- Gallium Phosphide (GaP) – red, yellow and green
- Aluminium Gallium Phosphide (AlGaP) – green
- Gallium Nitride (GaN) – green, emerald green
- Gallium Indium Nitride (GaInN) – near ultraviolet, bluish-green and blue
- Silicon Carbide (SiC) – blue as a substrate
- Zinc Selenide (ZnSe) – blue
- Aluminium Gallium Nitride (AlGaN) – ultraviolet

Applications of LED

- LED is used as a bulb in the homes and industries
- The light emitting diodes are used in the motorcycles and cars
- These are used in the mobile phones
- At the traffic light signals LED’s are used
- TV screens, display monitors etc
- LEDs are also used for Visible light communication

Photodiodes

- A photodiode is one type of light detector, which allows current flow in presence of light. Can be used to convert light signals into electrical signals.
- The photodiode is an important component of a growing family of circuits known as optoelectronics or photonics.
- Combining an LED with a photodiode in the same package results in a device known as an opto-isolator.
- Operates in reverse-bias

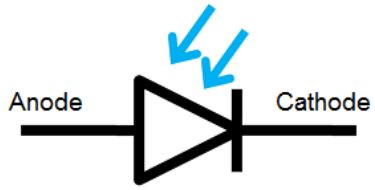

Photodiode symbol

Photodiode applications

- Smoke detectors
- Space applications – Inter-satellite optical link, laser ranging, LIDAR
- Photodiodes are used in medical applications such as computed tomography, instruments to analyze samples, and pulse oximeters
- Photodiodes are used for optical communications
- Photodiodes are frequently used for exact measurement of the intensity of light in science & industry

Solar cell/ Photovoltaic cells

- Works in unbiased mode
- The covalent bond in the depletion region of a p-n junction can break when energy is absorbed
- For Gallium arsenide based semiconductor, this bond can break in the visible spectrum and electron-hole pairs are created.
- These pairs creates reverse current flow, i.e. optical energy is converted into electrical energy

Solar cell/ Photovoltaic cells

There are three qualitative differences between a solar cell and photodetector

1. A photodiode works on a narrow range of wavelength while solar cells need to work over a broad spectral range (solar spectrum).
2. Solar cells are typically wide area devices to maximize exposure.
3. In photodiodes the metric is quantum efficiency, which defines the signal to noise ratio, while for solar cells, it is the power conversion efficiency

https://nptel.ac.in/courses/113106062/Lec19.pdf

Example
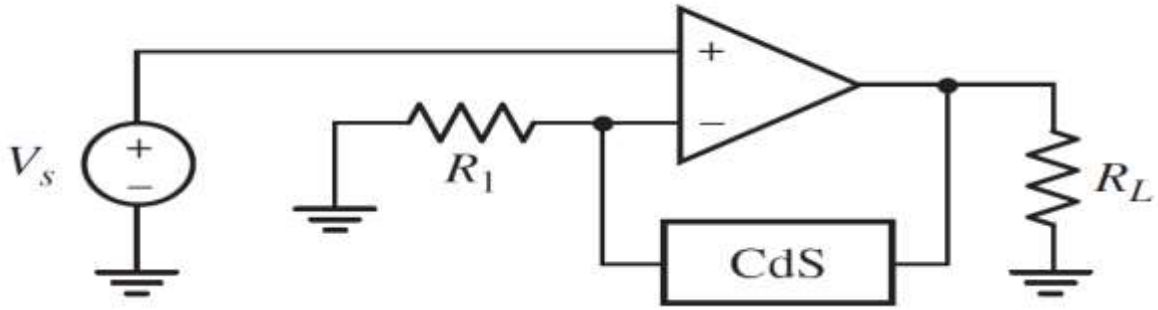
Cadmium sulfide (CdS) is commonly used to fabricate resistors whose value depends on the intensity of light shining on the surface. In Fig. 6.61 a CdS "photocell" is used as the feedback resistor R_f. In total darkness, it has a resistance of 100 kΩ, and a resistance of 10 kΩ under a light intensity of 6 candela. R_L represents a circuit that is activated when a voltage of 1.5 V or less is applied to its terminals. Choose R_1 and V_s so that the circuit represented by R_L is activated by a light of 2 candela or brighter.