ECE 113- Basic Electronics

Lecture week 6: Capacitor, Inductor

Dr. Ram Krishna Ghosh, Assistant Professor

Office: B601, Research and Development Block

Email: rkghosh@iiitd.ac.in

INDRAPRASTHA INSTITUTE *of*
INFORMATION TECHNOLOGY
DELHI

Capacitors and Inductors

Capacitors and Inductors

Capacitors and Inductors

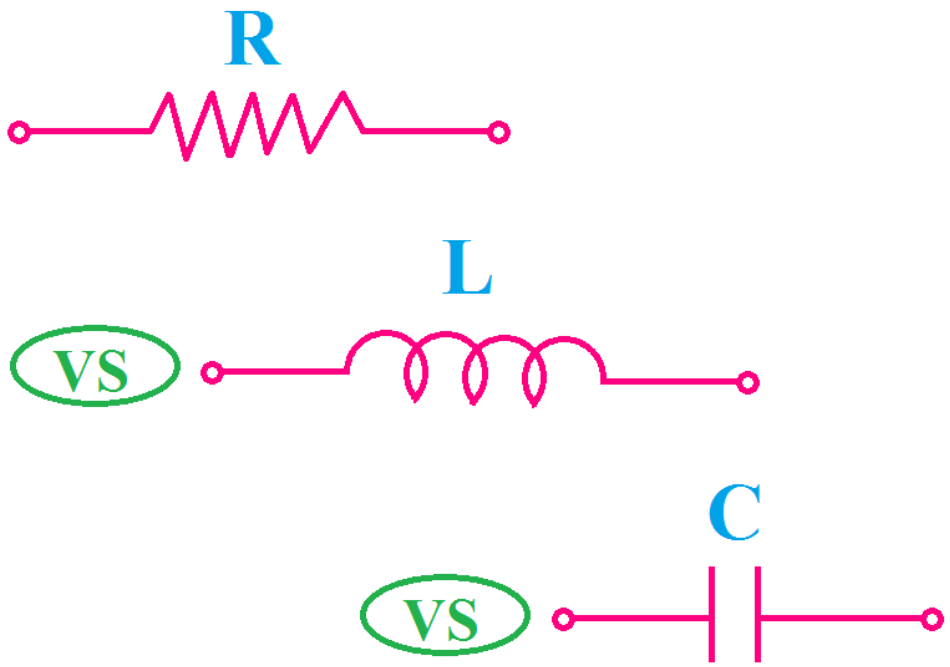

- These elements store and deliver finite amount of energy
- Passive linear circuit elements
- The current-voltage relationships for these new elements are time dependent
- Ideal Capacitors and Inductors can neither generate nor dissipate energy

Capacitors

- A capacitor is a device which is used to store electrical charge (a surprisingly useful thing to do in circuits!).
- No single electronic component plays a more important role today than the capacitor. This device is used to store information in computer memories, to regulate voltages in power supplies, to establish electrical fields, to store electrical energy, to detect and produce electromagnetic waves, and to measure time.
- Effectively, any capacitor consists of a pair of conducting plates separated by an insulator. The insulator is called a dielectric and is often air, paper or oil.
- Unit : Farad (1 C/V)

- Capacitor
  = conductor (metal plate)
  +
  insulator (dielectric)
  +
  conductor (metal plate)

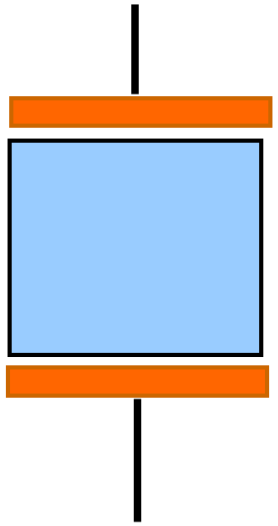

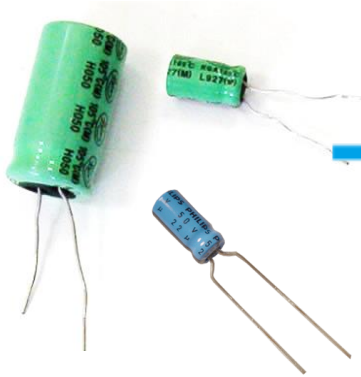

Ceramic Capacitor Symbol

Variable Capacitor Symbol

Action of a capacitor

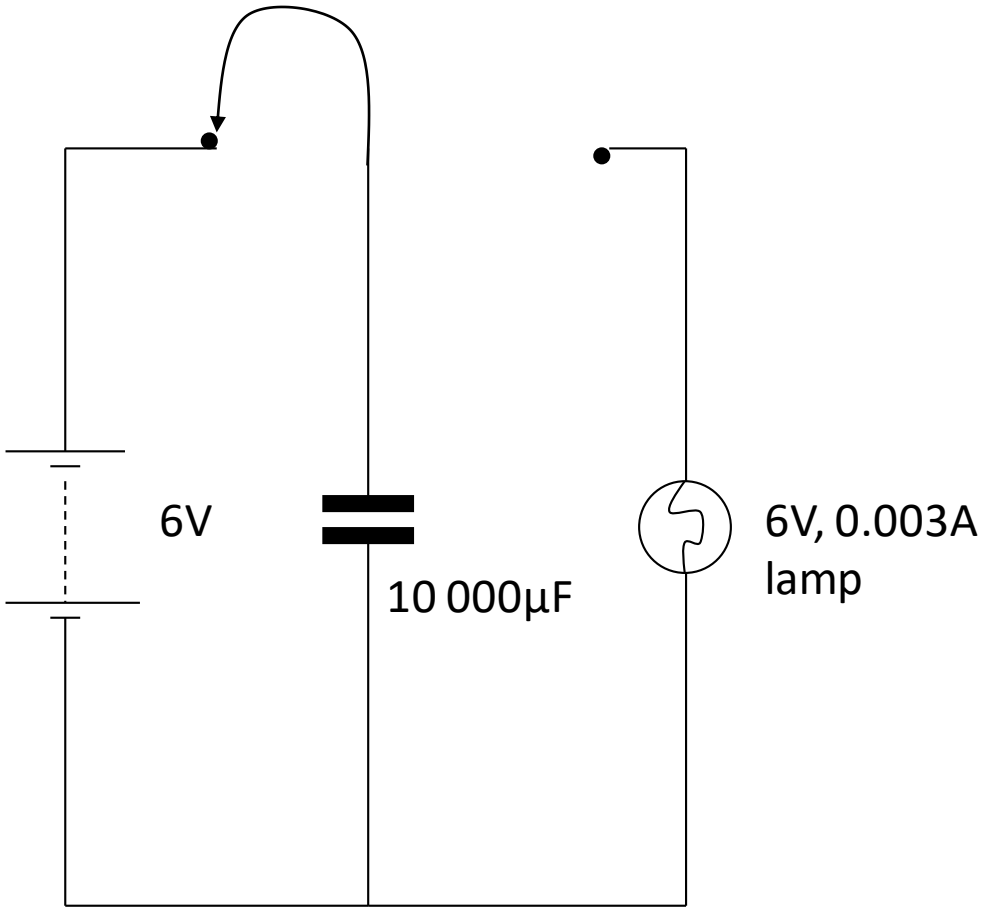

Set up the circuit.

Connect the flying lead of the capacitor to the battery.

Connect it to the lamp.

What do you observe.

Try putting a 100Ω resistor in series with the lamp. What effect does it have?

What is happening

- When the capacitor is connected to the battery, a momentary current flows.
- Electrons gather on the plate attached to the negative terminal of the battery. At the same time electrons are drawn from the positive plate of the capacitor

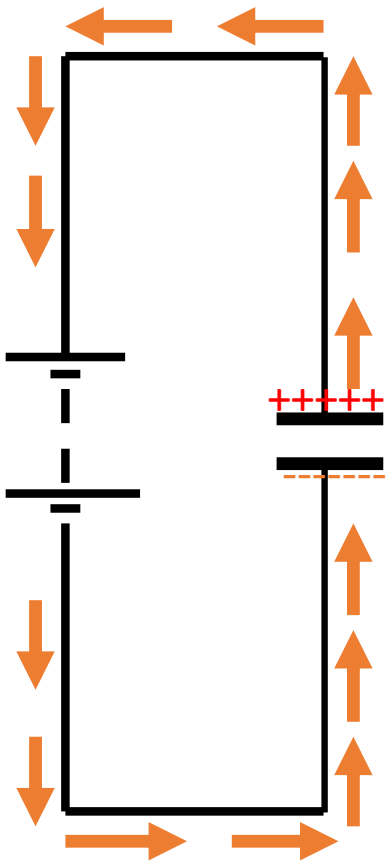

- When the capacitor is connected to the lamp, the charge has the opportunity to rebalance and a current flows lighting the lamp.
- This continues until the capacitor is completely discharged.

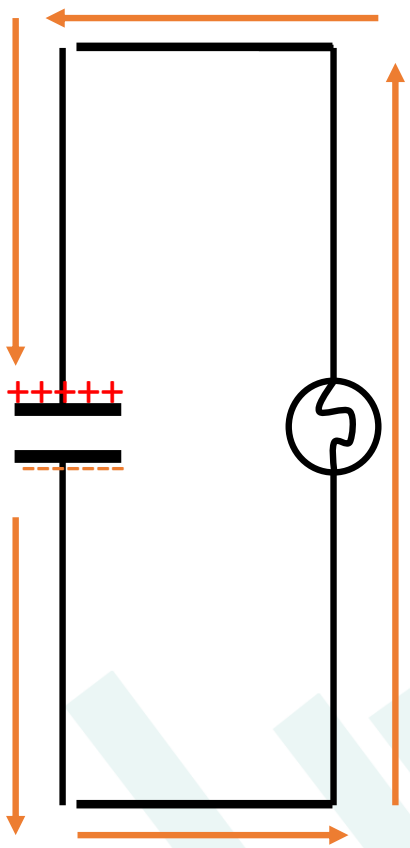

While the capacitor is charging

- Although the current falls as the capacitor is charging the current at any instant in both of the meters is the same, showing that the charge stored on the negative plate is equal in quantity with the charge stored on the positive plate.

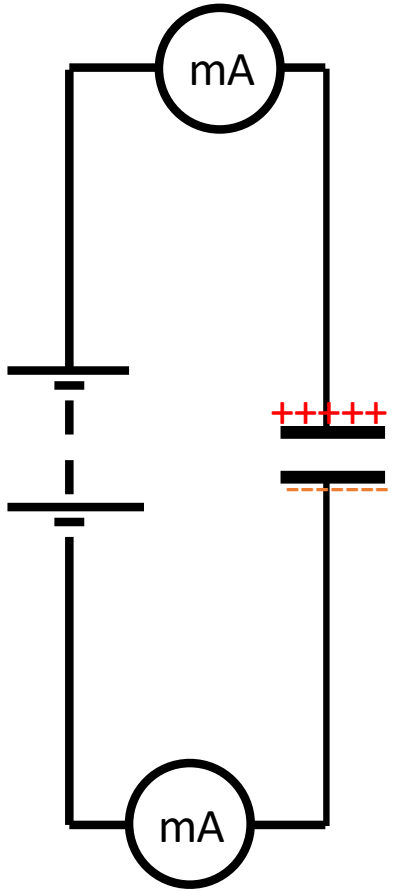

- When the capacitor is fully charged the potential difference measured across the capacitor is equal and opposite to the potential difference across the battery, so there can be no further current flow.

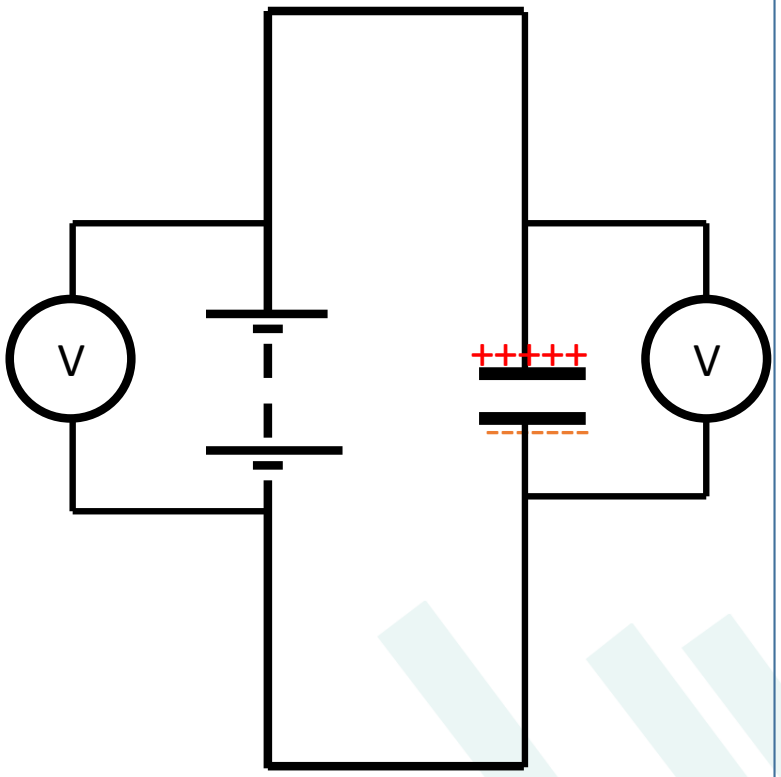

Capacitance

What is Capacitance (C)?

- From the word "capacity," it describes how much charge an arrangement of conductors can hold for a given voltage applied.

- Charges will flow until the right conductor's potential is the same as the + side of the battery, and the left conductor's potential is the same as the – side of the battery.

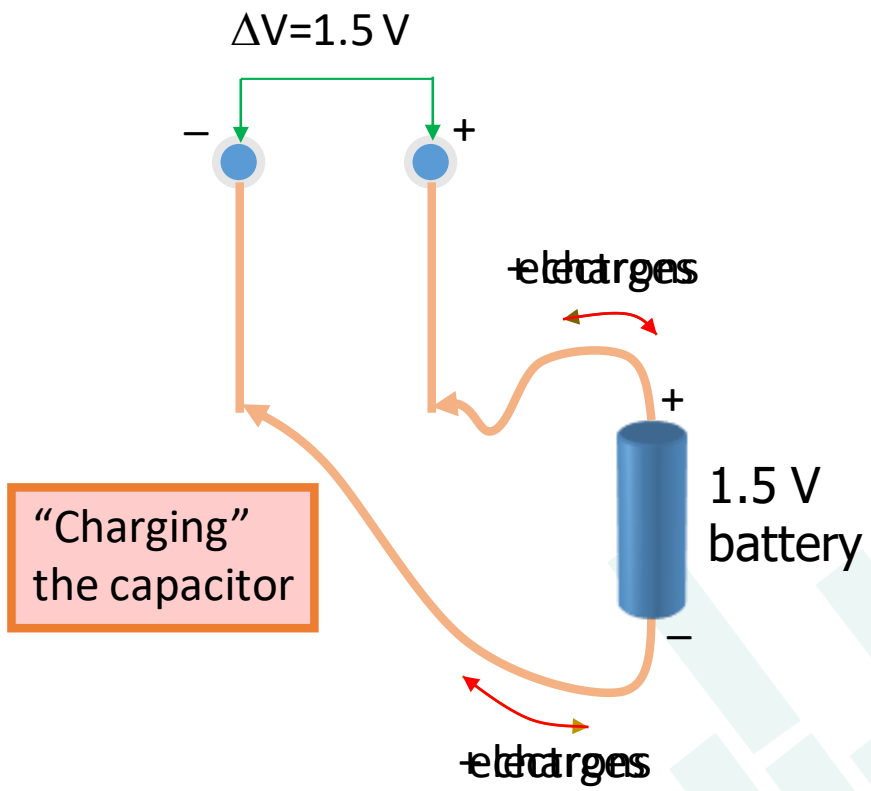

- How much charge is needed to produce an electric field whose potential difference is 1.5 V?
- Depends on capacitance:

$$q = CV$$

definition of capacitance

Capacitance Depends on Geometry

- What happens when the two conductors are moved closer together?

- They are still connected to the battery, so the potential difference cannot change.

- But recall that $V = -\int \vec{E} \cdot d\vec{s}$

- Since the distance between them decreases, the E field has to increase.

- Charges have to flow to make that happen, so now these two conductors can hold more charge. I.e. the capacitance increases.

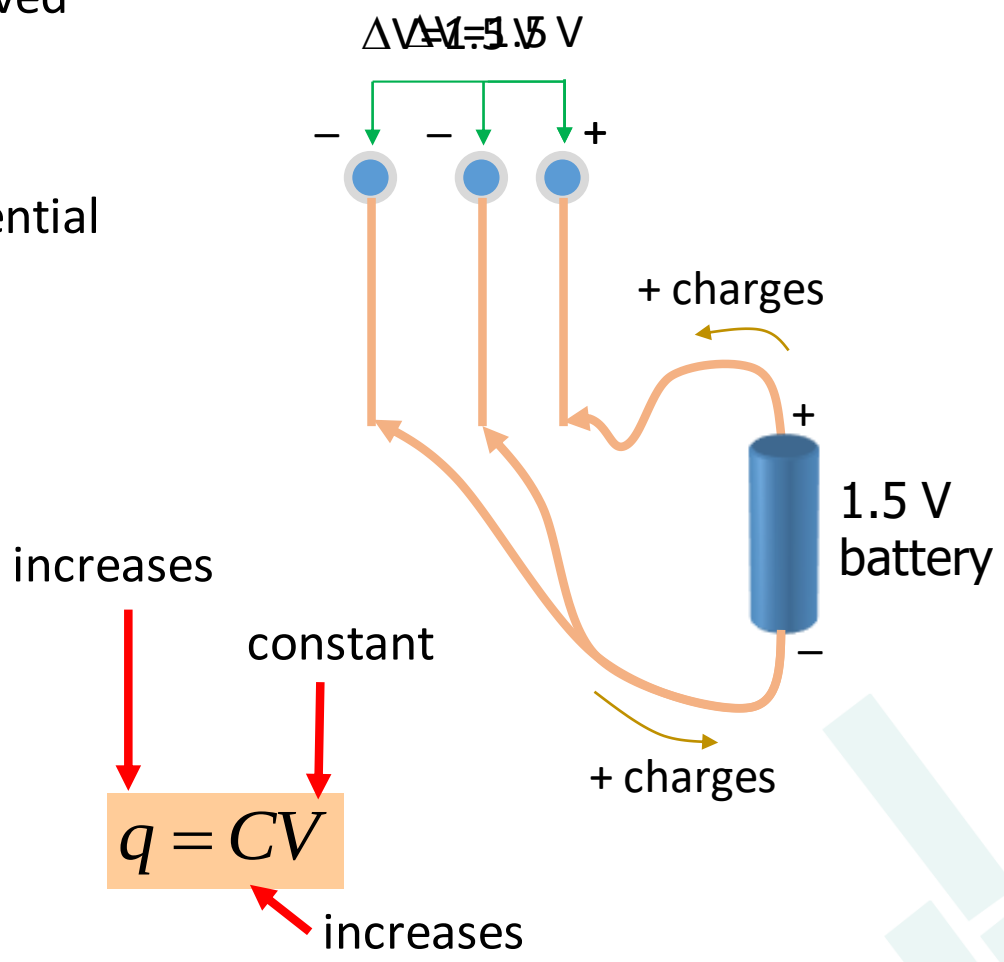

Capacitance Depends on Geometry

- What happens if we replace the small conducting spheres with large conducting plates?
- The plates can hold a lot more charge, so the capacitance goes way up.

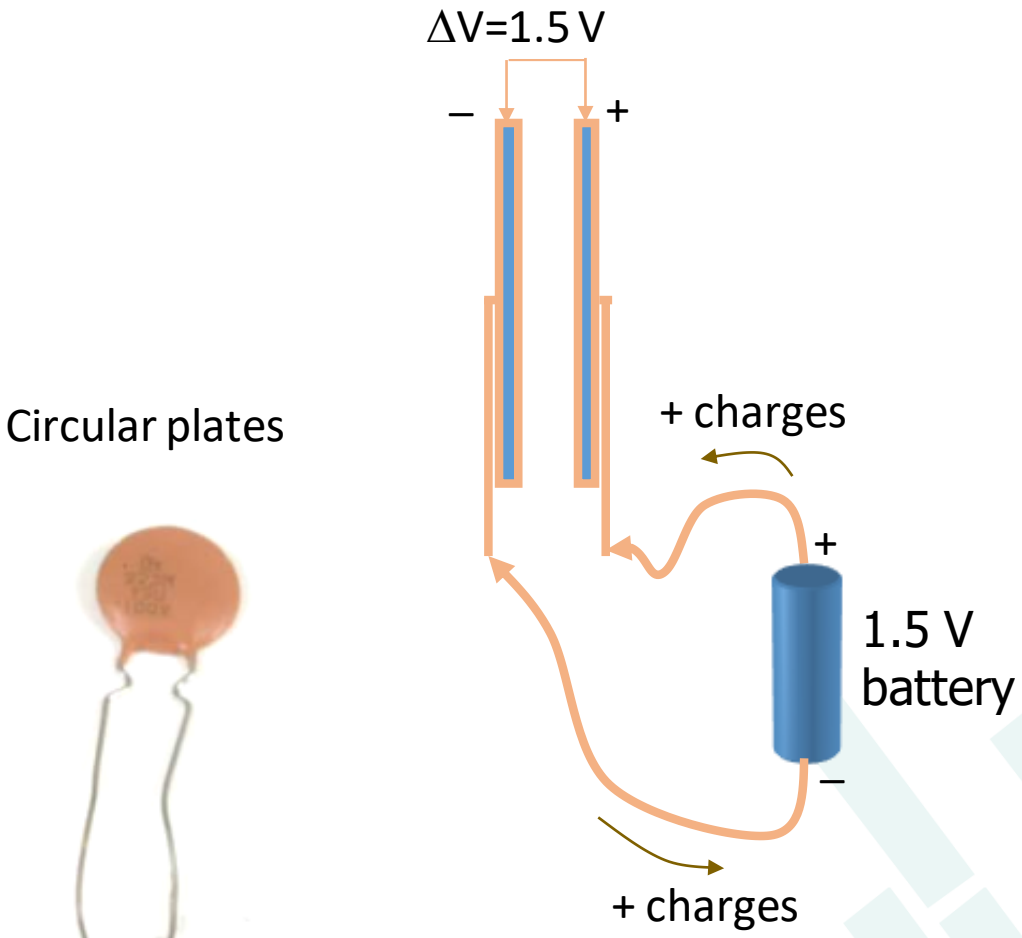

Circular plates

- Here is a capacitor that you can use in an electronic circuit.
- We will discuss several ways in which capacitors are useful.
- But first, let's look in more detail at what capacitance is.

Capacitance for Parallel Plates

- Parallel plates make a great example for calculating capacitance, because
  - The E field is constant, so easy to calculate.
  - The geometry is simple, only the area and plate separation are important.
- To calculate capacitance, we first need to determine the $\boldsymbol{E}$ field between the plates. We use Gauss' Law, with one end of our gaussian surface closed inside one plate, and the other closed in the region between the plates (neglect fringing at ends):

$$\varepsilon_0 \oint \vec{E} \cdot d\vec{A} = q \quad \text{so} \quad q = \varepsilon_0 EA$$

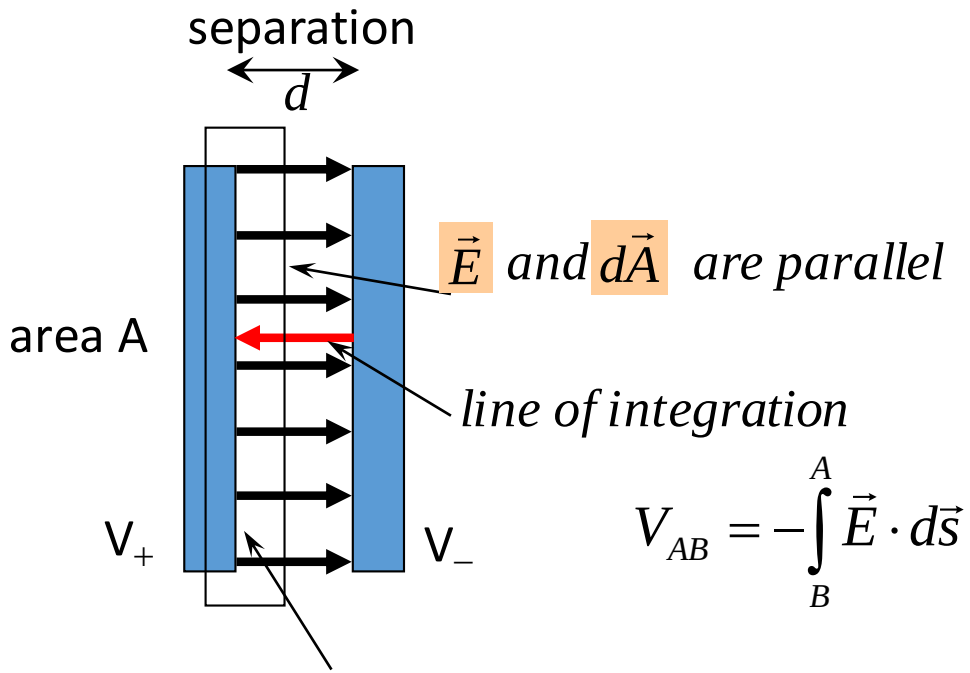

- Need to find potential difference $V = V_+ - V_- = -\int \vec{E} \cdot d\vec{s}$
- Since $E = constant$, we have $V = Ed$, so the capacitance is

$$C = q/V = \frac{\varepsilon_0 EA}{Ed} = \frac{\varepsilon_0 A}{d}$$

Gauss's Law:
The net electric flux through any hypothetical closed surface is equal to $1/\varepsilon_0$ times the net electric charge within that closed surface

Capacitance for Other Configurations (Cylindrical)

- Cylindrical capacitor
  - The E field falls off as $1/r$.
  - The geometry is fairly simple, but the V integration is slightly more difficult.
- To calculate capacitance, we first need to determine the $\boldsymbol{E}$ field between the plates. We use Gauss' Law, with a cylindrical gaussian surface closed in the region between the plates (neglect fringing at ends):

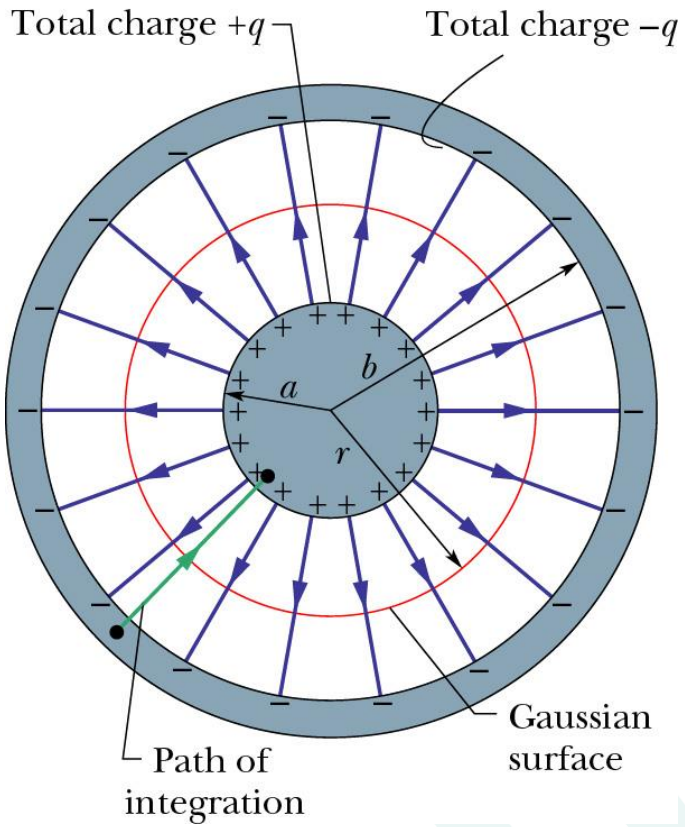

$$\varepsilon_0 \oint \vec{E} \cdot d\vec{A} = q$$ So $$q = \varepsilon_0 EA = \varepsilon_0 E(2\pi rL)$$ or $$E = q/(2\pi\varepsilon_0 rL)$$

- Need to find potential difference $$V = V_+ - V_- = -\int \vec{E} \cdot d\vec{s}$$
- Since $E \sim 1/r$, we have $$V = \frac{q}{2\pi\varepsilon_0 L}\int_b^a \frac{dr}{r} = \frac{q}{2\pi\varepsilon_0 L}\ln\left(\frac{b}{a}\right)$$, so the capacitance is $$C = q/V = 2\pi\varepsilon_0 \frac{L}{\ln(b/a)}$$

Capacitance for Other Configurations (Spherical)

- Spherical capacitor
  - The E field falls off as $1/r^2$.
  - The geometry is fairly simple, and the V integration is similar to the cylindrical case.
- To calculate capacitance, we first need to determine the $\boldsymbol{E}$ field between the spheres. We use Gauss' Law, with a spherical gaussian surface closed in the region between the spheres:

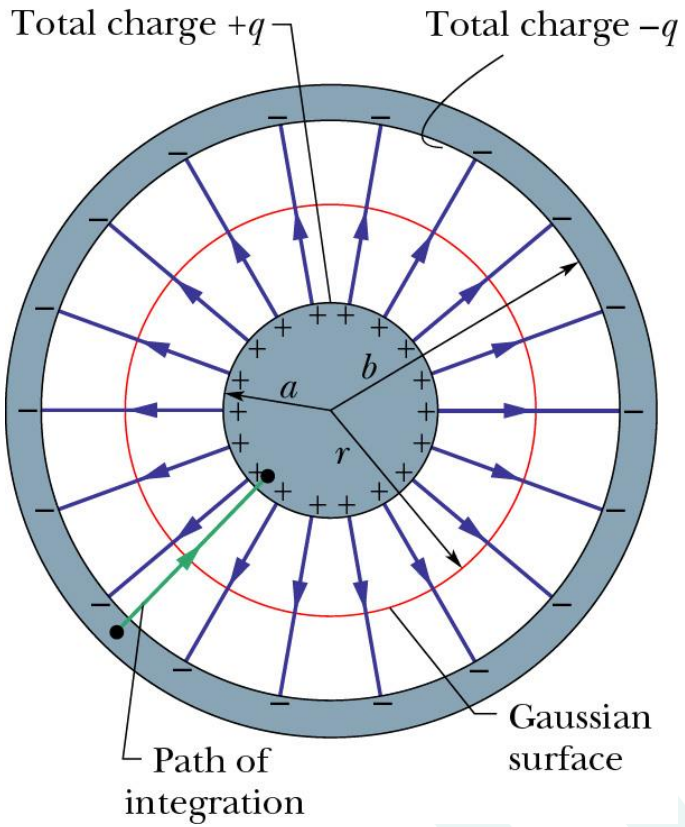

$$\varepsilon_0 \oint \vec{E} \cdot d\vec{A} = q$$ So $$q = \varepsilon_0 EA = \varepsilon_0 E(4\pi r^2)$$ or $$E = q/(4\pi\varepsilon_0 r^2)$$

- Need to find potential difference $$V = V_+ - V_- = -\int \vec{E} \cdot d\vec{s}$$
- Since $E \sim 1/r^2$, we have $$V = \frac{q}{4\pi\varepsilon_0}\int_b^a \frac{dr}{r^2} = \frac{q}{4\pi\varepsilon_0}\left(\frac{1}{a} - \frac{1}{b}\right)$$, so the capacitance is $$C = q/V = 4\pi\varepsilon_0 \frac{ab}{b-a}$$

Capacitance Summary

- Parallel Plate Capacitor

$$C = \frac{\varepsilon_0 A}{d}$$

- Cylindrical (nested cylinder) Capacitor

$$C = 2\pi\varepsilon_0 \frac{L}{\ln(b/a)}$$

- Spherical (nested sphere) Capacitor

$$C = 4\pi\varepsilon_0 \frac{ab}{b-a}$$

- Capacitance for isolated Sphere

$$C = 4\pi\varepsilon_0 R$$

Capacitors Store Energy

- When charges flow from the battery, energy stored in the battery is lost. Where does it go?
- An arrangement of charge is associated with potential energy. One way to look at it is that the charge arrangement stores the energy. Recall the definition of electric potential $U = qV$
- For a distribution of charge on a capacitor, a small element dq will store potential energy $dU = V\,dq$ .Thus, the energy stored by charging a capacitor from charge 0 to q is

$$U = \frac{1}{C}\int_0^q q'\,dq' = \frac{q^2}{2C} = \tfrac{1}{2}CV^2$$

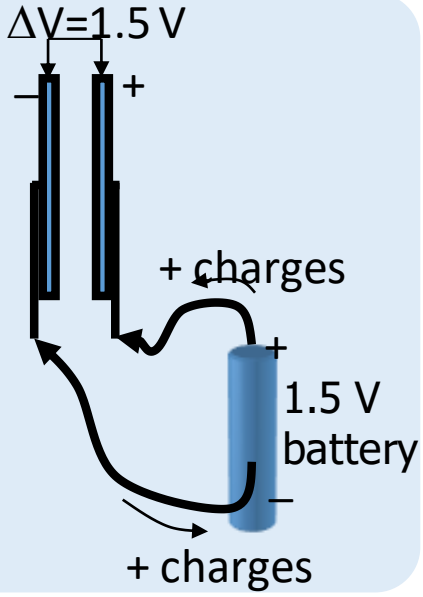

- Another way to think about the stored energy is to consider it to be stored in the electric field itself.
- The total energy in a parallel plate capacitor is $U = \tfrac{1}{2}CV^2 = \dfrac{\varepsilon_0 A}{2d}V^2$
- The volume of space filled by the electric field in the capacitor is $vol = Ad$, so the *energy density* is

$$u = \frac{U}{vol} = \frac{\varepsilon_0 A}{2dAd}V^2 = \tfrac{1}{2}\varepsilon_0\left(\frac{V}{d}\right)^2$$

but $V = -\int \vec{E}\cdot d\vec{s} = Ed$ for a parallel plate capacitor,

so $u = \tfrac{1}{2}\varepsilon_0 E^2$

Energy stored in electric field

Dielectrics in capacitors

- You may have wondered why we write ε_0 (permittivity of free space), with a little zero subscript. It turns out that other materials (water, paper, plastic, even air) have different permittivities $\varepsilon = \kappa\varepsilon_0$. The κ is called the *dielectric constant*, and is a unitless number. For air, κ = 1.00054 (so ε for air is for our purposes the same as for "free space.")
- In all of our equations where you see ε_0, you can substitute $\kappa\varepsilon_0$ when considering some other materials (called dielectrics).
- The nice thing about this is that we can increase the capacitance of a parallel plate capacitor by filling the space with a dielectric:

$$C' = \frac{\kappa\varepsilon_0 A}{d} = \kappa C$$

Material	Dielectric Constant κ
Air	1.00054
Polystyrene	2.6
Paper	3.5
Transformer Oil	4.5
Pyrex	4.7
Ruby Mica	5.4
Porcelain	6.5
Silicon	12
Germanium	16
Ethanol	25
Water (20º C)	80.4
Water (50º C)	78.5
Titania Ceramic	130
Strontium Titanate	310

What Happens When You Insert a Dielectric?

- With battery attached, V=const, so more charge flows to the capacitor

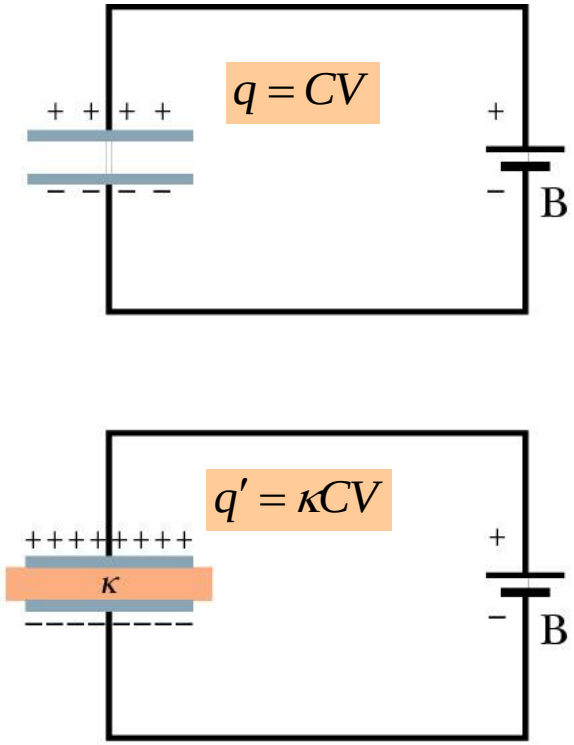

V = a constant

- With battery disconnected, q=const, so voltage (for given q) drops.

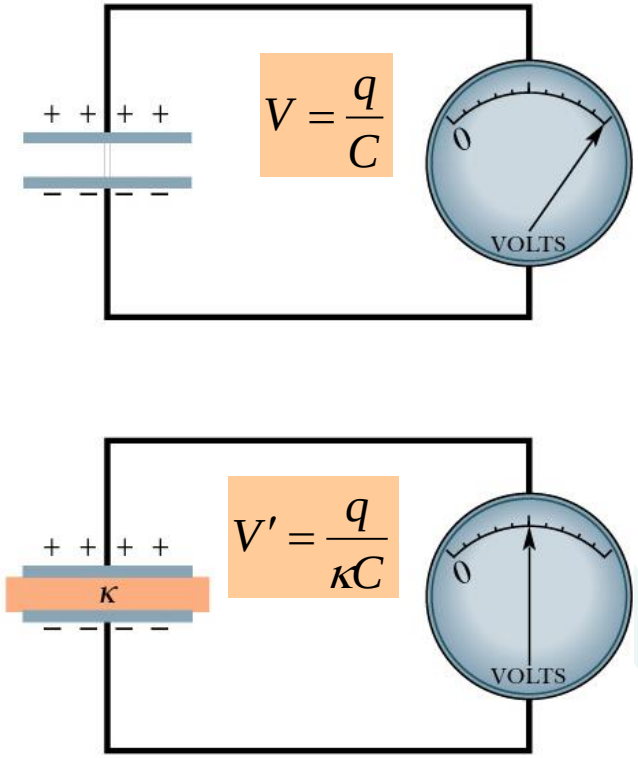

q = a constant

What Does the Dielectric Do?

- A dielectric material is made of atoms/molecules.
- Polar dielectrics already have a dipole moment (like the water molecule).
- Non-polar dielectrics are not naturally polar, but actually stretch in an electric field, to become polar.
- The molecules of the dielectric align with the applied electric field in a manner to oppose the electric field.
- This reduces the electric field, so that the net electric field is less than it was for a given charge on the plates.
- This lowers the potential (case b of the previous slide).
- If the plates are attached to a battery (case a of the previous slide), more charge has to flow onto the plates.

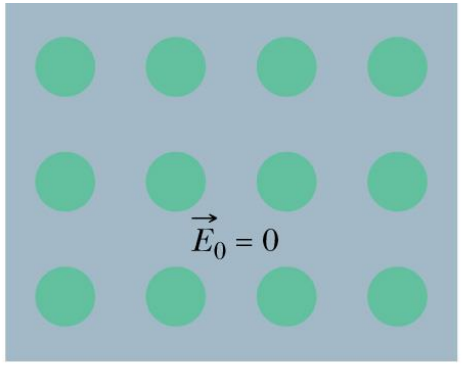

(a)

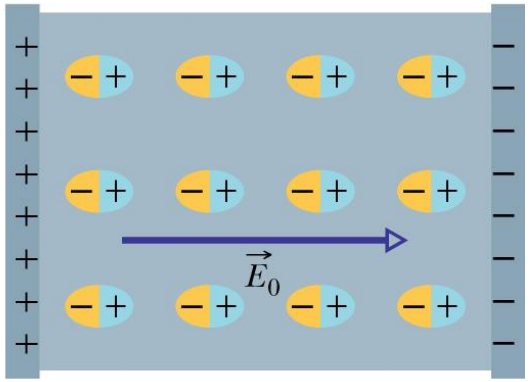

(b)

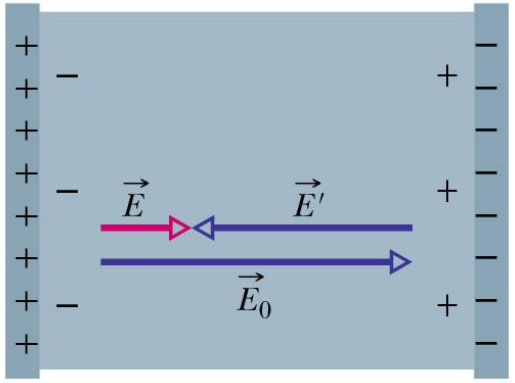

(c)

Basic categories of capacitors

Electrostatic capacitors —

Separate district electrodes and dielectric. These are subdivided based on dielectrics — ceramics, plastic film, glass, vacuum, air.

Most of these are again further divided as fixed and variable. All these capacitors are non-polar in nature, means their terminals may be connected in any polarity.

Voltages of these capacitors can go as high as few hundred or even thousands volts.

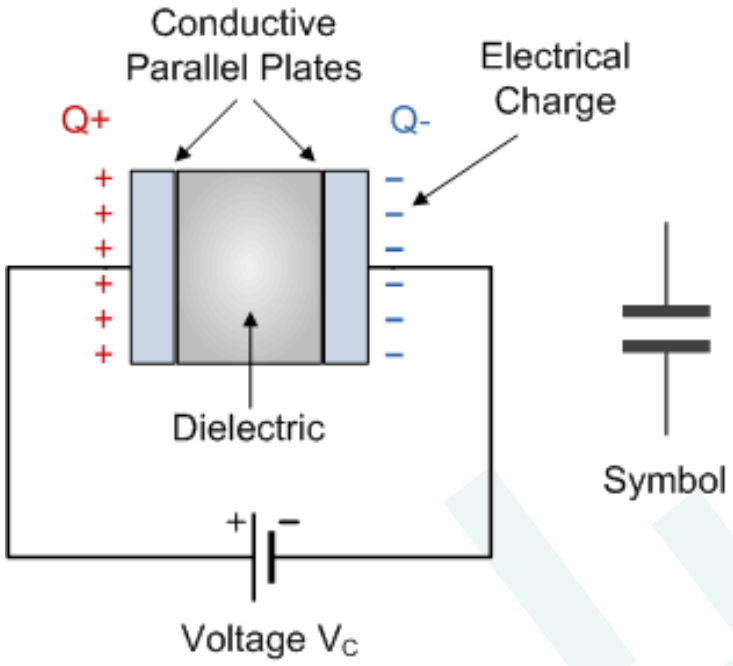

Basic categories of capacitors

Electrolytic capacitors—

Dielectric formed as oxide layer on electrodes. This makes for a very thin layer of dielectric, and dielectric constant is much higher. Both these factors allow much higher values.

These are basically polar in nature, with positive and negative terminals clearly marked. The polarity cannot be reversed.

Electrode material are mainly aluminium and Titanium electrodes, while Niobium electrodes are in use. Capacitors get the name from the electrode- aluminium electrolytic, tantalum capacitor, etc.

Voltages of these capacitors can vary from 10 V to maximum of 450 V DC. High values allow these capacitors to be used for energy storage in conventional circuits.

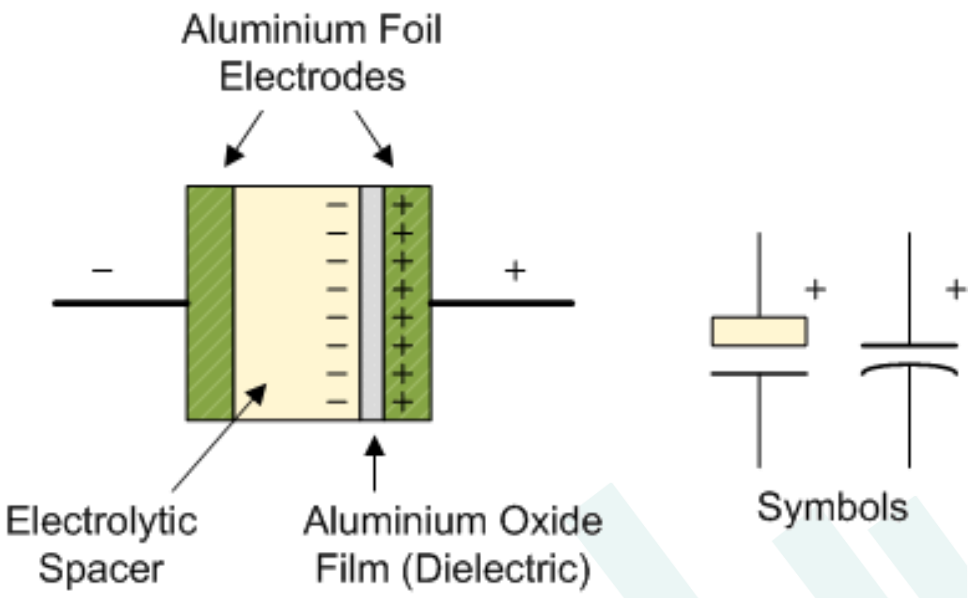

Basic categories of capacitors

Supercapacitors/ ultracapacitors —

No dielectric used. It is naturally formed at the interface of porous electrodes and electrolyte.

Electrodes have extremely large surface area, and the naturally formed oxide dielectric layer thickness can be less than half nanometer. Dielectric constant of the layer is also high.

Values of this capacitor are highest, in Farads, or several thousand Farads. Even though voltages are limited to below 3 V, extremely high values allow energy storage comparable to battery, though less by a factor of 5 to 10. Power delivery is very high, not possible by any battery.

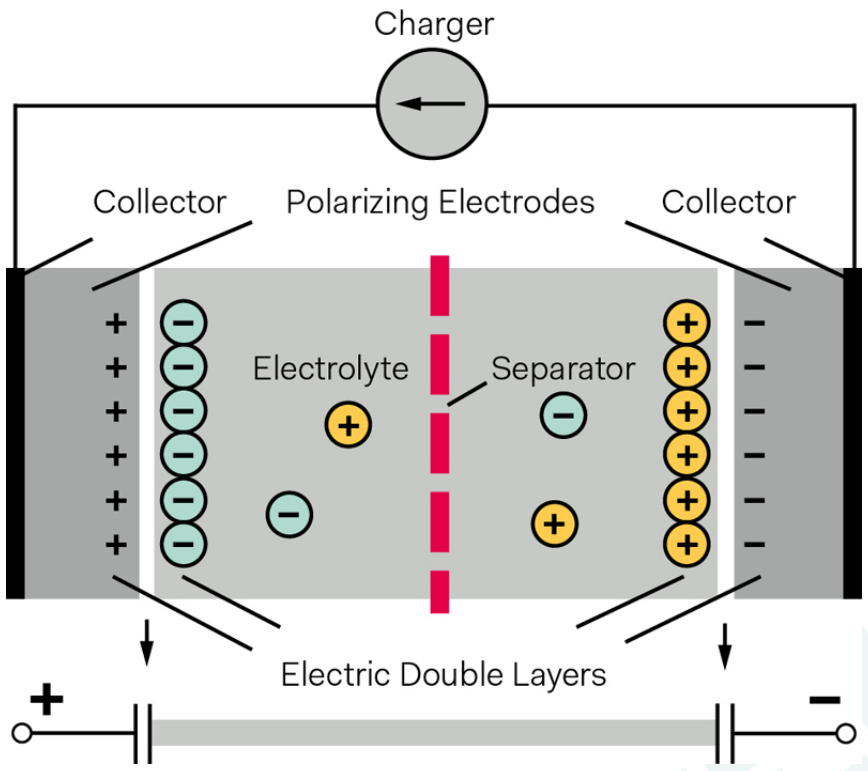

What Changes?

A parallel plate capacitor is connected to a battery of voltage V. If the plate separation is decreased, which of the following increase?

A. II, III and IV.

B. I, IV, V and VI.

C. I, II and III.

D. All except II.

E. All increase.

I.	Capacitance of capacitor
II.	Voltage across capacitor
III.	Charge on capacitor
IV.	Energy stored on capacitor
V.	Electric field magnitude between plates
VI.	Energy density of E field

$$q = CV$$

$$C = \frac{\varepsilon_0 A}{d}$$

$$U = \tfrac{1}{2}CV^2$$

$$u = \tfrac{1}{2}\varepsilon_0 E^2$$

Capacitor

Capacitance: $C = \frac{dQ}{dv}$ $or\ Q = Cv$

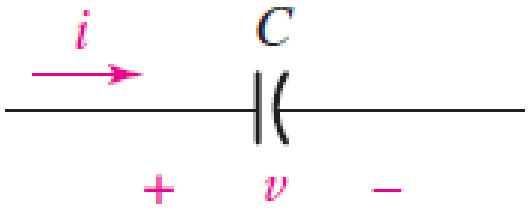

Current through a capacitor: $i = C\frac{dv}{dt}$

Zero current flowing through a capacitor when applied DC voltage, but a non-zero current for applied AC voltage

Determine the current *i* flowing through the capacitor of Fig. 7.1 for the two voltage waveforms of Fig. 7.3 if $C = 2$ F.

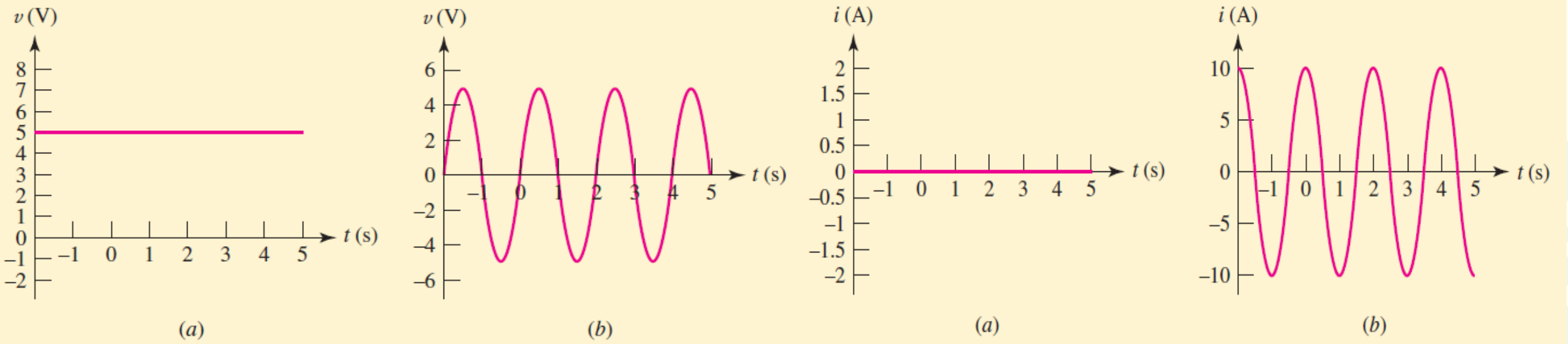

Current-voltage relationship in a capacitor

Current-voltage relationship

$$v(t) = \frac{1}{C}\int_{t_0}^{t} i(t')\,dt' + v(t_0)$$

Find the capacitor voltage that is associated with the current shown graphically in Fig. 7.5*a*. The value of the capacitance is 5 μF.

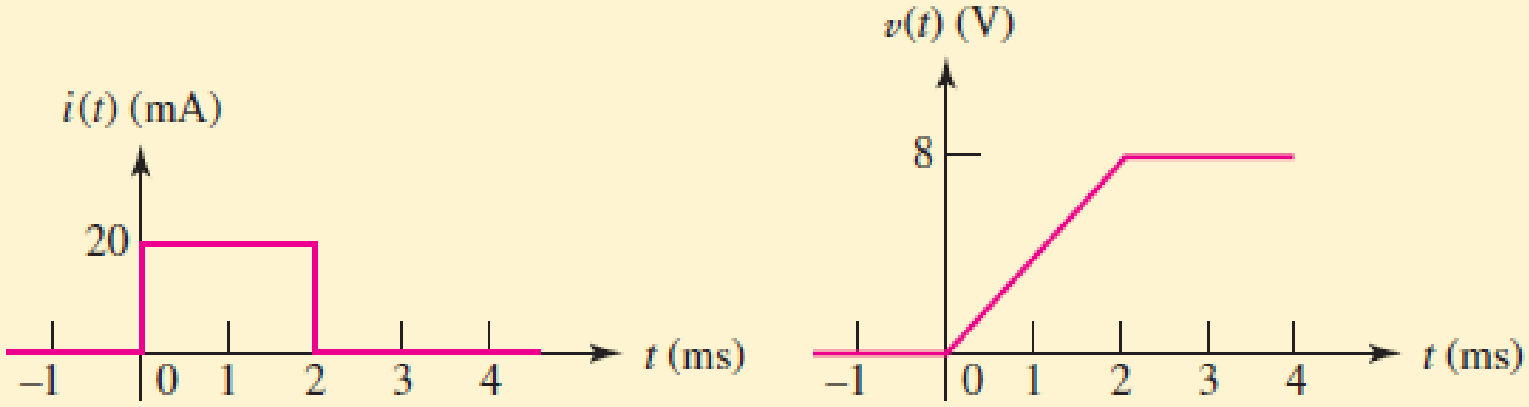

- Power:

$$p = vi = vC\frac{dv}{dt}$$

Stored energy can be calculated by integrating power considering zero initial voltage:

$$w_C(t) = \frac{1}{2}Cv(t)^2$$

Applicability of KCL and KVL

- L and C are linear elements
- Kirchhoff's laws can be applied (are not restricted to only resistance)

Capacitors in series

Same current flows through all capacitor, so same amount of charge will accumulate in each capacitor

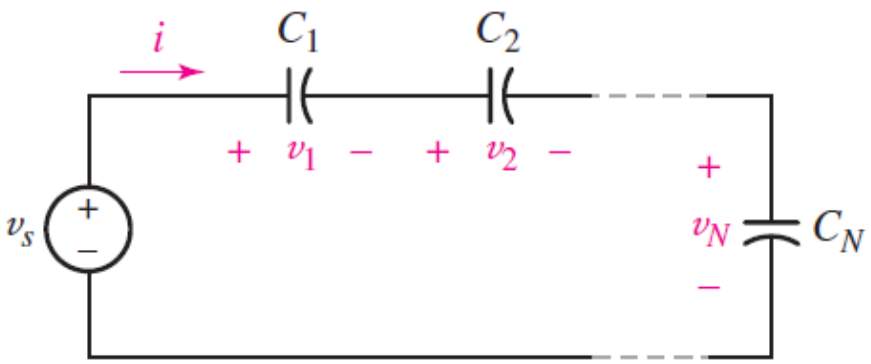

(a)

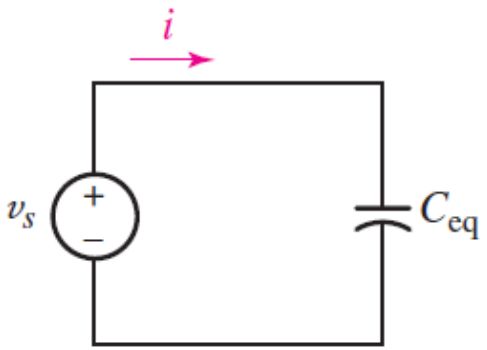

(b)

- To see the series formula, consider the individual voltages across each capacitor

$$V_1 = \frac{q}{C_1},\ V_2 = \frac{q}{C_2},\ V_3 = \frac{q}{C_3}$$

- The sum of these voltages is the total voltage of the battery, V

$$V = V_1 + V_2 + V_3 = \frac{q}{C_1} + \frac{q}{C_2} + \frac{q}{C_3}$$

- Since $V/q = 1/C_{eq}$, we have

$$\frac{V}{q} = \frac{1}{C_{eq}} = \frac{1}{C_1} + \frac{1}{C_2} + \frac{1}{C_3}$$

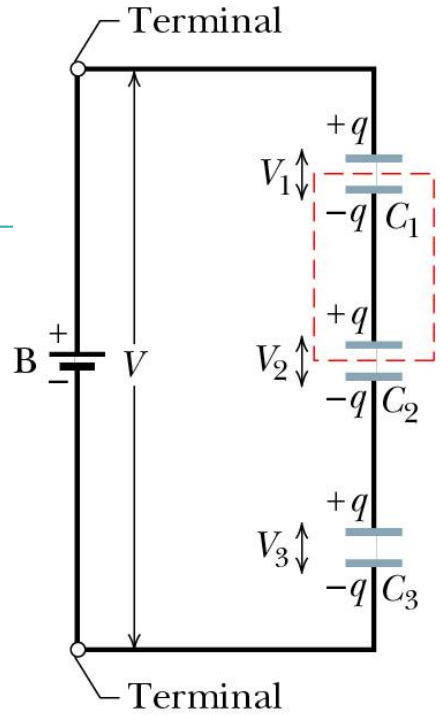

(a)

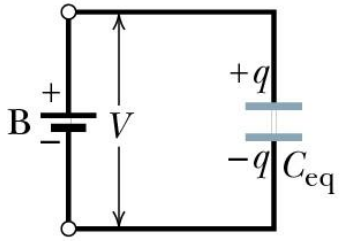

(b)

Capacitors in series: $$\frac{1}{C_{eq}} = \sum_{j=1}^{n} \frac{1}{C_j}$$

Capacitors in Parallel

Current is divided among the parallel branches. So, different amount of charge will accumulate in different capacitor but the voltage is same.

$$V = \frac{q_1}{C_1}, \quad V = \frac{q_2}{C_2}, \quad V = \frac{q_3}{C_3}$$

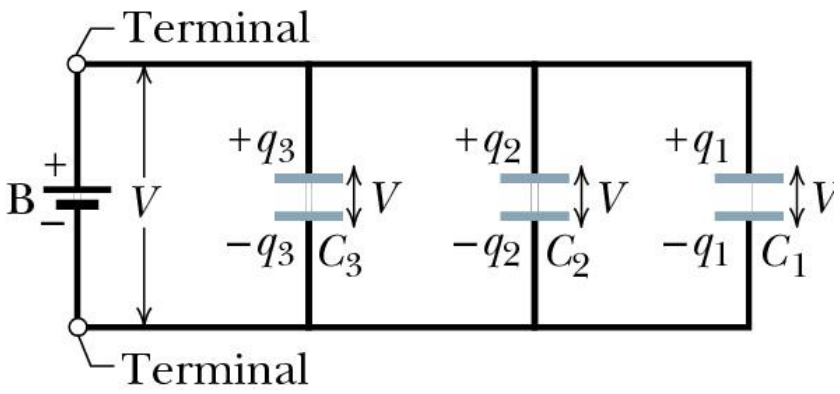

(a)

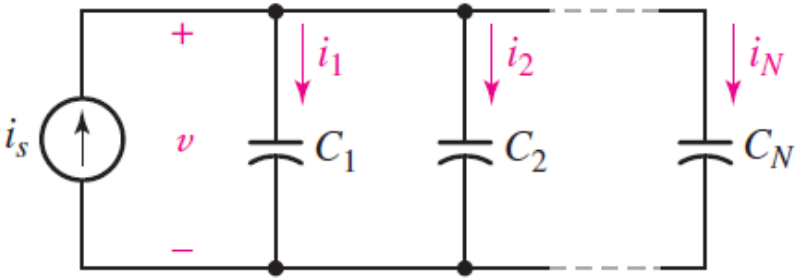

(a)

$$V = \frac{q_1}{C_1}, \quad V = \frac{q_2}{C_2}, \quad V = \frac{q_3}{C_3}$$

$$\Rightarrow$$

$$q = q_1 + q_2 + q_3$$

$$= C_1V + C_2V + C_3V = V(C_1 + C_2 + C_3)$$

$$\Rightarrow$$

$$C_{eq}V = V(C_1 + C_2 + C_3) \Rightarrow C_{eq} = C_1 + C_2 + C_3$$

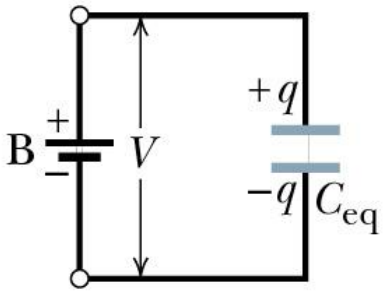

(b)

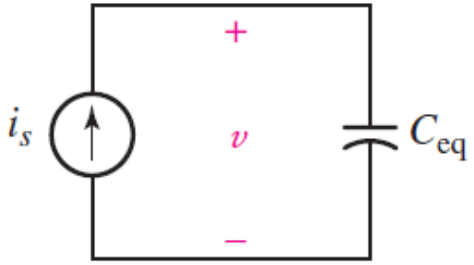

(b)

Capacitors in parallel: $C_{eq} = \sum_{j=1}^{n} C_j$

Example Capacitor Circuit

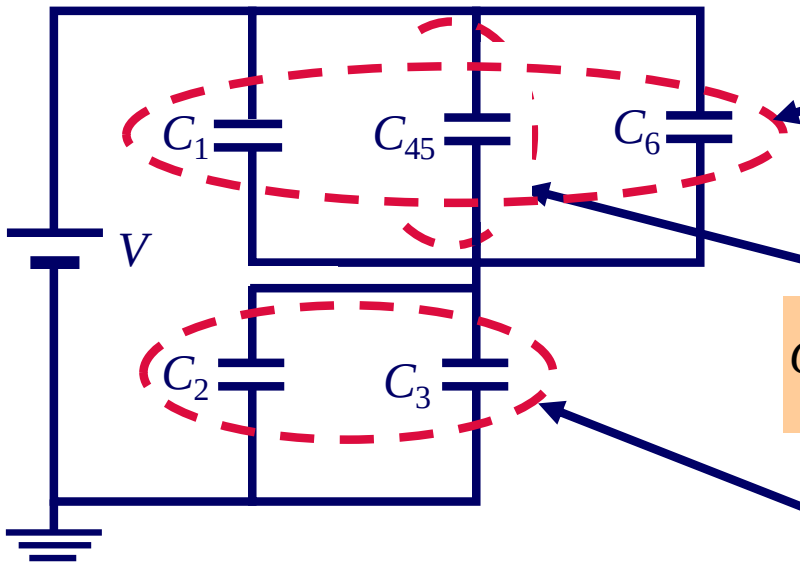

parallel

$$C_{1456} = C_1 + C_{45} + C_6$$

series

$$C_{45} = \frac{C_4 C_5}{C_4 + C_5}$$

parallel

$$C_{23} = C_2 + C_3$$

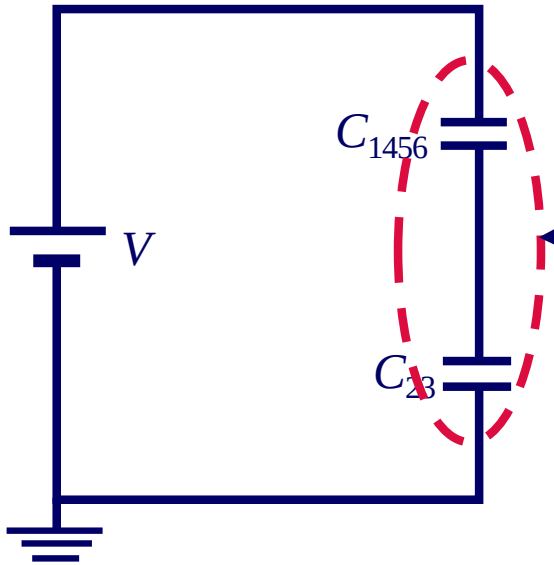

$$C_{45} = \frac{C_4 C_5}{C_4 + C_5}$$

$$C_{1456} = C_1 + C_{45} + C_6$$

$$C_{23} = C_2 + C_3$$

$$C_{123456} = \frac{C_{1456} C_{23}}{C_{1456} + C_{23}}$$

Complete solution

$$C_{123456} = \frac{\left(C_1 + \frac{C_4 C_5}{C_4 + C_5} + C_6\right)(C_2 + C_3)}{C_1 + \frac{C_4 C_5}{C_4 + C_5} + C_6 + C_2 + C_3}$$

Inductor

The behavior of **inductors** is based on magnetic fields where the source of magnetic field is current. If the current is varying with time, <u>the magnetic field is varying with time which induces a voltage in the conductor.</u>

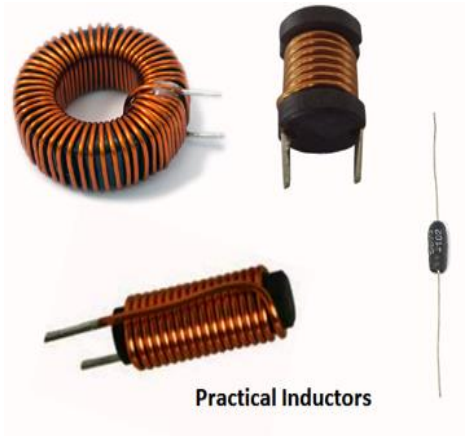

Inductance is symbolized by “L”

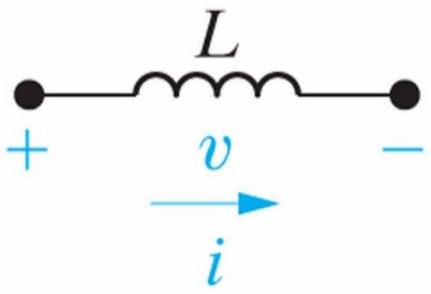

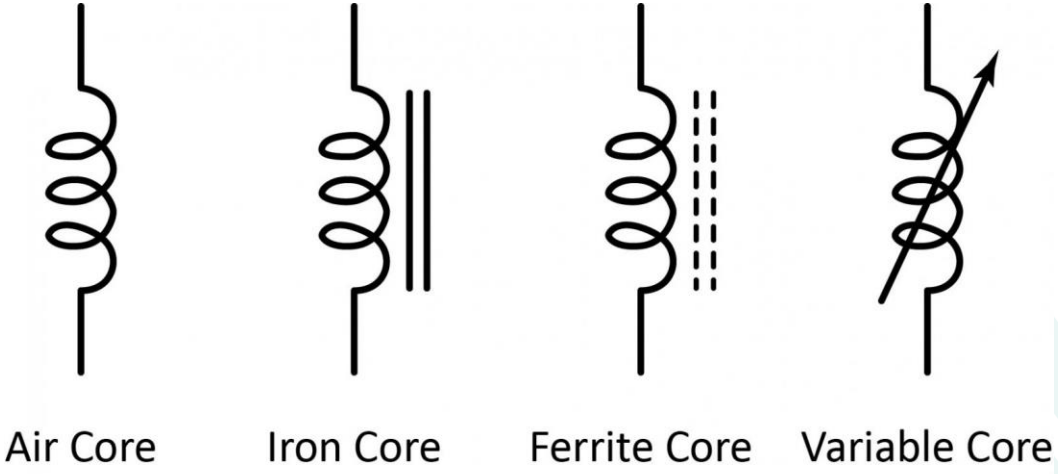

Inductor Symbols

Induction and Inductance

Magnetic Induction

- Faraday's Law
  - "A changing magnetic flux induces an electromotive force (emf)" $\varepsilon = -\frac{\Delta\Phi_B}{\Delta t}$
- Lenz's Law
  - "the magnetic field produced by an induced current always opposes any changes in the magnetic flux"

- When we try to run a current through a coil of wire, the *changing* current induces a "back-EMF" that opposes the current.
- That is because the changing current creates a changing magnetic field, and the increasing magnetic flux through the coils of wire induce an opposing EMF.
- We seek a description of this that depends only on the geometry of the coils (i.e., independent of the current through the coil).
- We call this the inductance (c.f. capacitance). It describes the proportionality between the current through a coil and the magnetic flux induced in it.

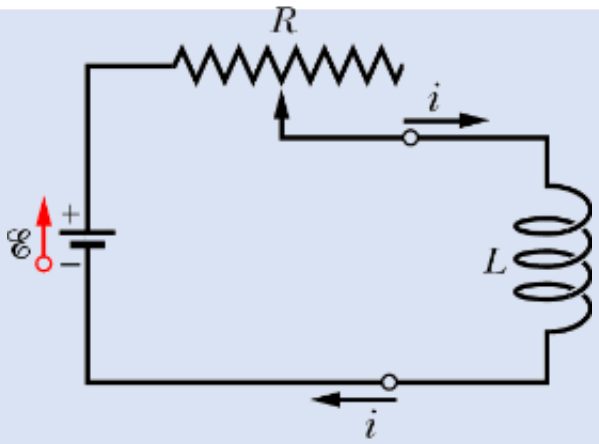

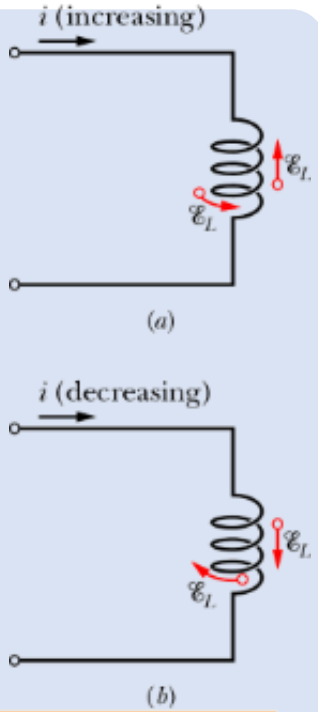

$$L = \frac{N\Phi_B}{i}$$

Inductance

Inductance units: henry (H), 1 H = 1 T-m^2/A

Magnetic flux

A reminder in how to find the Magnetic flux across an area

- $\phi_m = BA$

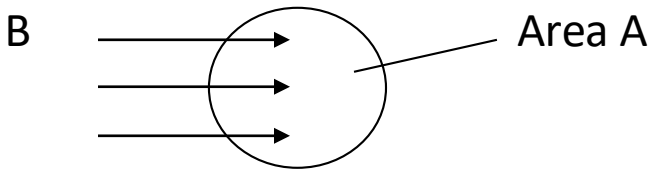

- $\phi_m = \vec{B} \cdot \hat{n} dA$

$$= \vec{B} \cdot d\vec{A}$$

$$= B\cos\theta dA$$

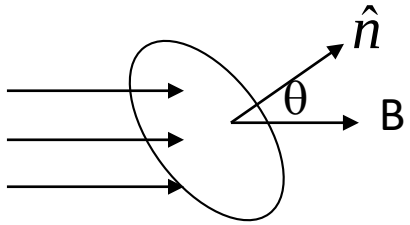

- $\phi_m = \int \vec{B} \cdot \hat{n} dA$

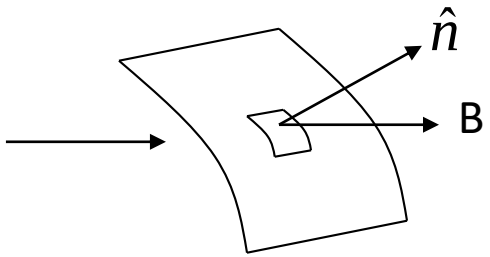

- We need a way to calculate the *amount of magnetic field* that passes through a loop.
- Similar to the definition of electric flux, we define a magnetic flux $\Phi_B = \int \vec{B} \cdot d\vec{A}$
- Magnetic flux is a scalar.
- In uniform magnetic field, the magnetic flux can be expressed as $\Phi_B = BA\cos\theta$
- SI unit is the weber (Wb):

  1 weber = 1 Wb = 1 T m^2

Self-inductance

- Induced emf acts like a battery pushing current in the opposite direction. This phenomenon is called ***self-inductance*** (or inductance)
  - The current changing through a coil induces a current in the *same* coil.
  - The induced current opposes the original applied current, from Lenz's Law.
  - The circuit element that uses self-inductance is called an ***inductor***
  - Energy is stored in the magnetic field of an inductor.
  - There is an energy density associated with the magnetic field.

From now, own "inductance" means self-inductance

- Since for any inductor $L = \frac{N\Phi_B}{i}$ then $iL = N\Phi_B$, $L\frac{di}{dt} = N\frac{d\Phi_B}{dt}$

- But Faraday's Law says $\mathcal{E}_L = -N\frac{d\Phi_B}{dt} = -L\frac{di}{dt}$

The self-induced EMF is opposite to the direction of change of current

•Mutual induction -- An emf is induced in a coil as a result of a changing magnetic flux produced by a second coil.

Inductance of a Solenoid

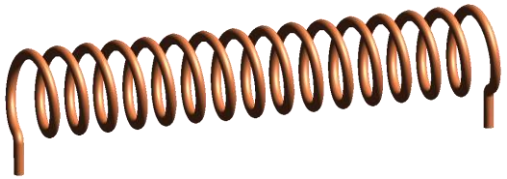

- Consider a solenoid. Applying Ampere's circuital law to the solenoid, the magnetic field inside a solenoid is

$$Bl = \mu_0 iN \Rightarrow B = \mu_0 in$$

number of turns per unit length $n = N/l$.

- The magnetic flux through the solenoid is then $\Phi_B = \int B \cdot dA = \mu_0 inA$

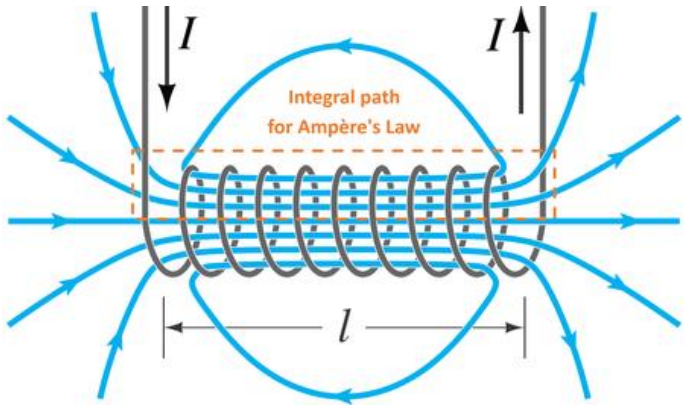

- The inductance of the solenoid is then: $L = \frac{N\Phi_B}{i} = \frac{N\mu_0 inA}{i} = nl\mu_0 nA = \mu_0 n^2 lA$

- Note that this depends only on the geometry. Since $N = nl$, this can also be written $L = \frac{\mu_0 N^2 A}{l}$ Compare with capacitance of a capacitor $C = \frac{\varepsilon_0 A}{l}$

Ampere's circuital law

$$\oint \vec{B} \cdot \vec{dl} = \mu_o I$$

Can also write $\mu_0 = 4\pi \times 10^{-7}$ H/m = 1.257 μH/m

Compare with $\varepsilon_0 = 8.85$ pF/m

Energy Stored in Magnetic Field

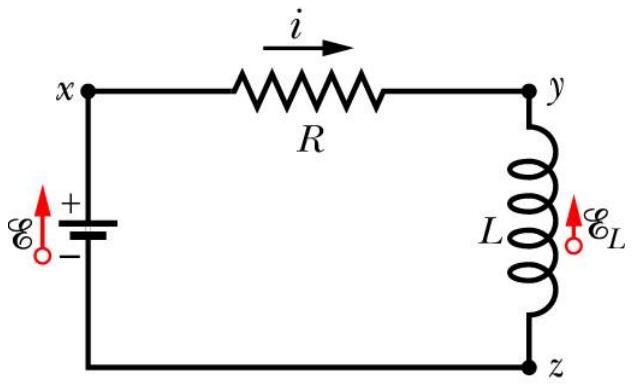

- By Kirchoff's Loop Rule, we have $\mathcal{E} = iR + L\dfrac{di}{dt}$

- We can find the power in the circuit by multiplying by *i*.

$$\mathcal{E}i = i^2R + Li\frac{di}{dt}$$

power provided by battery

power dissipated in resistor

power stored in magnetic field

- Power is rate that work is done, i.e. $P = \dfrac{dU_B}{dt} = Li\dfrac{di}{dt}$

- So $dU_B = Li\,di$, or after integration $U_B = \dfrac{1}{2}Li^2$ Energy in magnetic field

Recall for electrical energy in a capacitor: $U_E = \dfrac{q^2}{2C} = \dfrac{1}{2}CV^2$

Magnetic energy density, u_B is $u_B = \dfrac{U_B}{V} = \dfrac{B^2}{2\mu_0}$

Inductance of a Coaxial Cable

- Calculate L of a length ℓ for the cable
- The total flux is

$$\Phi_B = \int B\, dA = \int_a^b \frac{\mu_o I}{2\pi r} \ell\, dr$$

$$= \frac{\mu_o I \ell}{2\pi} \ln\left(\frac{b}{a}\right)$$

- Therefore, L is $L = \frac{\Phi_B}{I} = \frac{\mu_o \ell}{2\pi} \ln\left(\frac{b}{a}\right)$

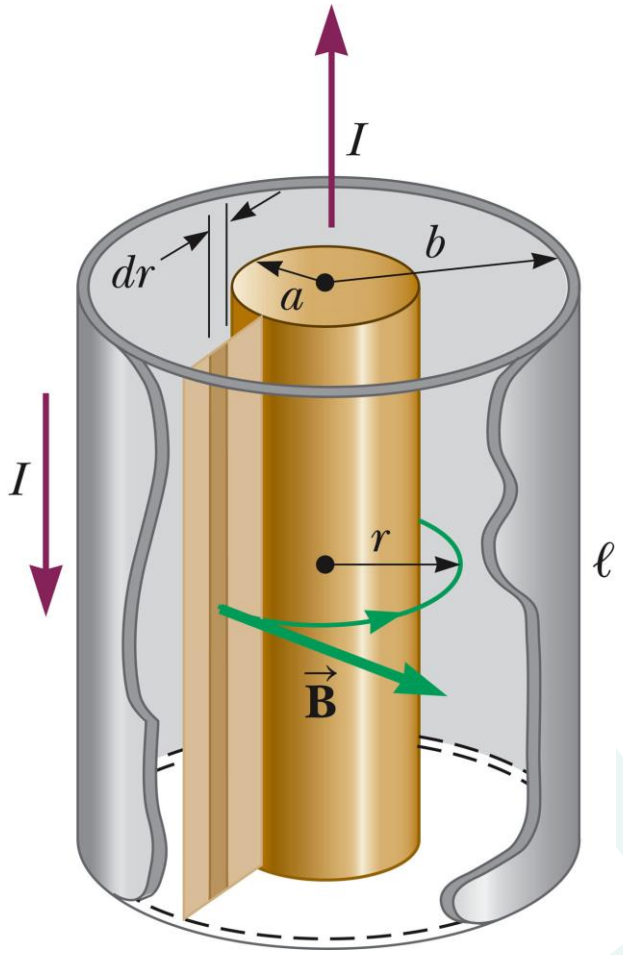

Inductors with magnetic core

- Most practical inductors are made by wrapping a wire coil around a magnetic material
- The magnetic material increases the inductance
  - Magnetic material has greater permeability than free space

$$\mu_o \rightarrow \mu, \ \mu > \mu_o$$

- Most inductors contain a material that produces a larger L in a smaller package

Material	relative permeability μ/μ0
Iron (99.95% pure Fe annealed in H)	200000
Ferritic stainless steel (annealed)	1000 – 1800
Ferrite	350 - 500
Ferrite (cobalt nickel zinc)	40 – 125
Carbon steel	100
Austenitic stainless steel	1.003 – 1.05
Neodymium magnet	1.05
Platinum	1.000265
Aluminum	1.000022
Concrete (dry)	1
Vacuum	1
Hydrogen	1.0000000
Water	0.999992
Bismuth	0.999834

Inductor

Voltage-current relationship

$$i(t) = \frac{1}{L}\int_{t_0}^{t} v\,dt' + i(t_0)$$

Power $p = vi = Li\frac{di}{dt}$

Energy (zero initial current):

$$w_L(t) = \frac{1}{2}Li(t)^2$$

$V_{ab} = iR$

(a) Resistor with current i flowing from a to b: potential drops from a to b

$V_{ab} = L\frac{di}{dt}$

(b) Inductor with current i flowing from a to b:
- If $di/dt > 0$: potential drops from a to b
- If $di/dt < 0$: potential increases from a to b
- If i is constant ($di/dt = 0$): no potential difference

Potential difference across a resistor depends on the current

Potential difference across an inductor depends on the **rate of change** of the current

Inductor

Given the waveform of the current in a 3 H inductor as shown in Fig. 7.12*a*, determine the inductor voltage and sketch it.

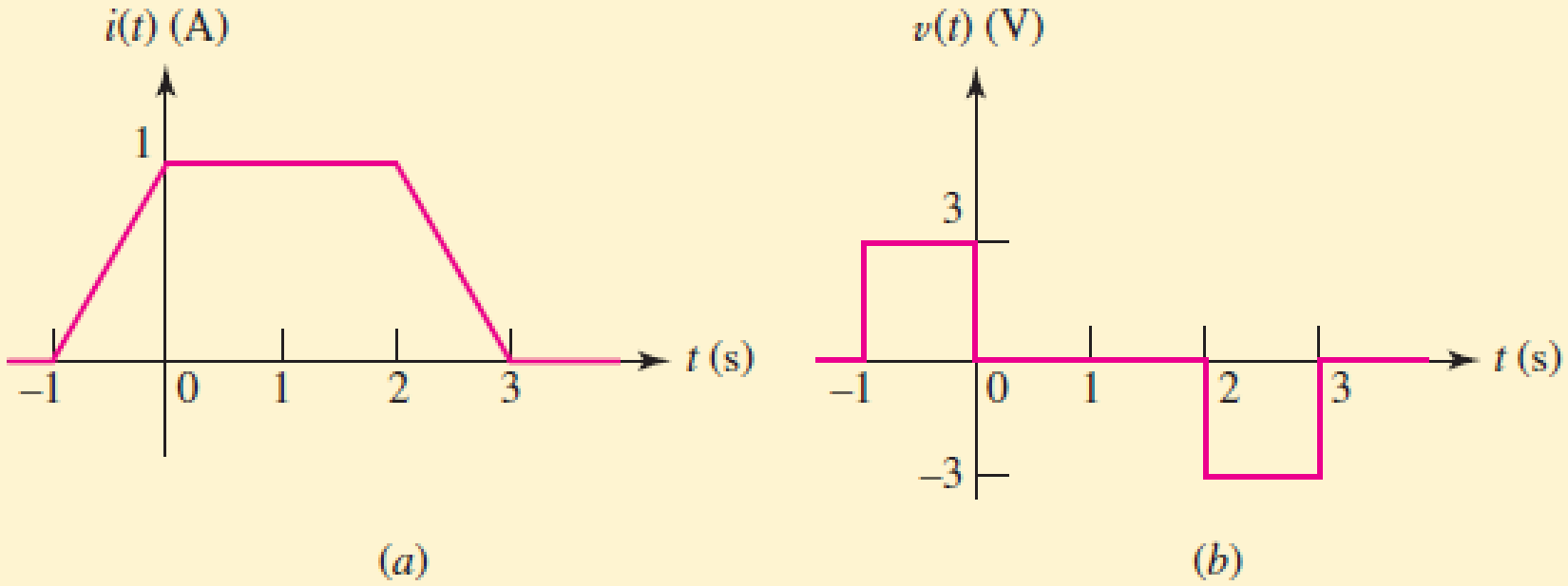

FIGURE 7.12 (*a*) The current waveform in a 3 H inductor. (*b*) The corresponding voltage waveform, $v = 3\, di/dt$.

Inductors in series

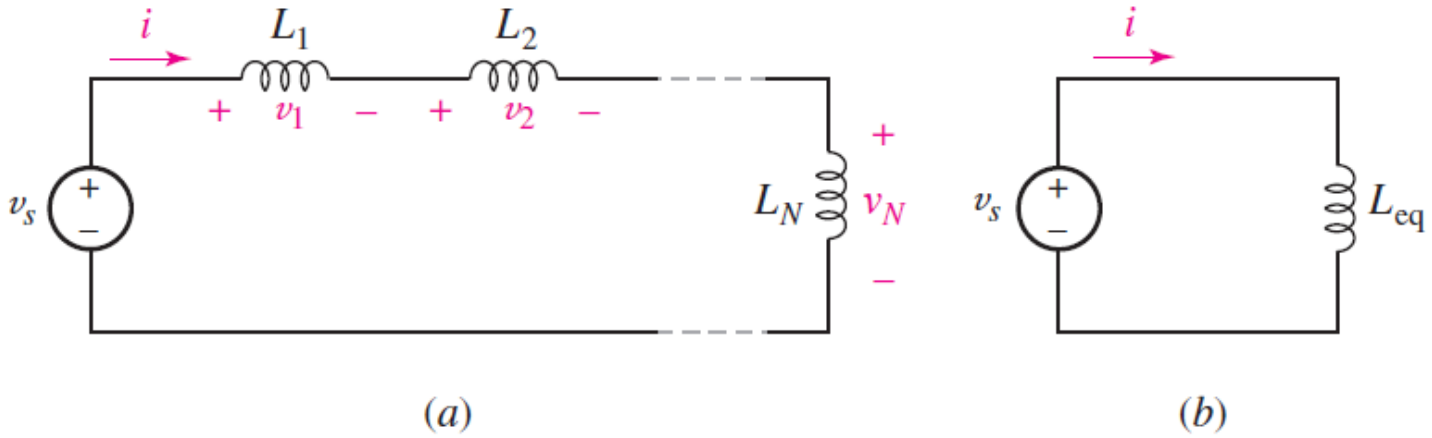

$$v_1 = L_1\frac{di}{dt}, \qquad v_2 = L_2\frac{di}{dt}, \qquad \text{and} \qquad v_3 = L_3\frac{di}{dt}.$$

$$v = v_1 + v_2 + v_3 = (L_1 + L_2 + L_3)\frac{di}{dt},$$

$$L_{eq} = L_1 + L_2 + L_3 + \cdots + L_n.$$

Inductors in parallel

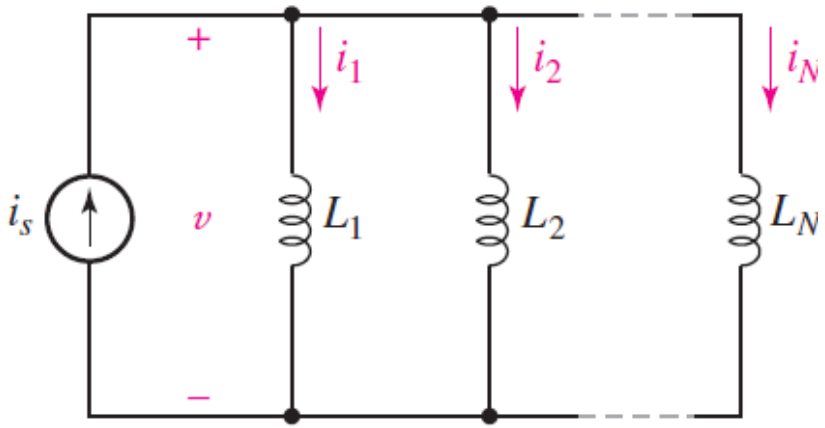

(a)

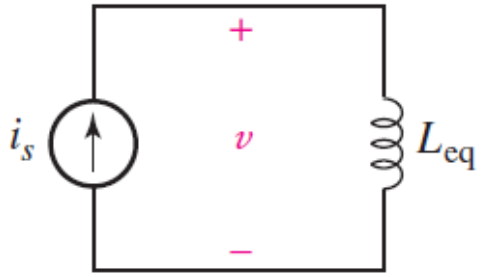

(b)

$$i_1 = \frac{1}{L_1}\int_{t_0}^{t} v\,d\tau + i_1(t_0),$$

$$i_2 = \frac{1}{L_2}\int_{t_0}^{t} v\,d\tau + i_2(t_0),$$

$$i_3 = \frac{1}{L_3}\int_{t_0}^{t} v\,d\tau + i_3(t_0).$$

$$i = i_1 + i_2 + i_3.$$

$$i = \frac{1}{L_{eq}}\int_{t_0}^{t} v\,d\tau + i(t_0).$$

$$i = \left(\frac{1}{L_1} + \frac{1}{L_2} + \frac{1}{L_3}\right)\int_{t_0}^{t} v\,d\tau + i_1(t_0) + i_2(t_0) + i_3(t_0).$$

$$\frac{1}{L_{eq}} = \frac{1}{L_1} + \frac{1}{L_2} + \frac{1}{L_3}$$

Mutual Inductance

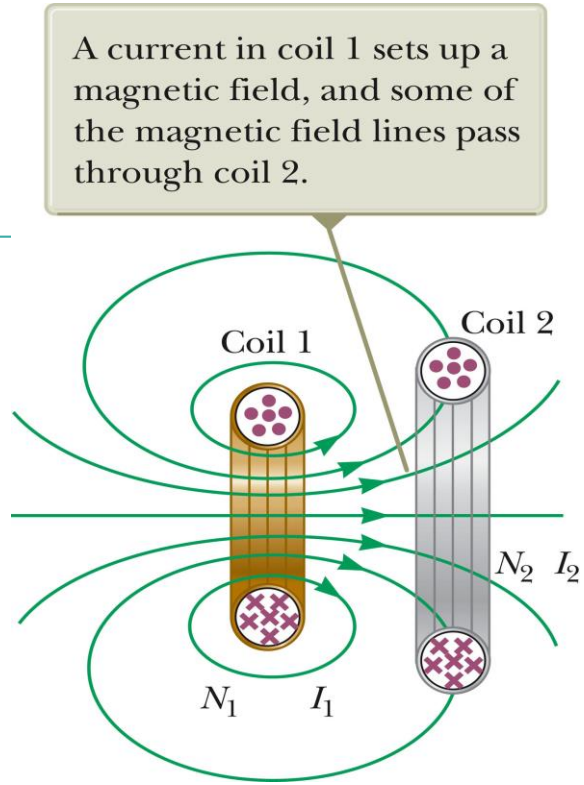

- The magnetic flux through the area enclosed by a circuit often varies with time because of time-varying currents in nearby circuits.
- This process is known as *mutual induction* because it depends on the interaction of two circuits.
  - The current in coil 1 sets up a magnetic field. Some of the magnetic field lines pass through coil 2.
  - Coil 1 has a current I_1 and N_1 turns. Coil 2 has N_2 turns.
- The **mutual inductance** M_{12} of coil 2 with respect to coil 1 is $M_{12} \equiv \dfrac{N_2 \Phi_{12}}{I_1}$
- Mutual inductance depends on the geometry of both circuits and on their orientation with respect to each other.
- If current I_1 varies with time, the emf induced by coil 1 in coil 2 is $\varepsilon_2 = -N_2 \dfrac{d\Phi_{12}}{dt} = -M_{12} \dfrac{dI_1}{dt}$
- If the current is in coil 2, there is a mutual inductance M_{21}.
- If current 2 varies with time, the emf induced by coil 2 in coil 1 is $\varepsilon_1 = -M_{21} \dfrac{dI_2}{dt}$
- In mutual induction, the emf induced in one coil is always proportional to the rate at which the current in the other coil is changing. The mutual inductance in one coil is equal to the mutual inductance in the other coil, i.e. $M_{12} = M_{21} = M$; The induced emf's can be expressed as $\varepsilon_1 = -M \dfrac{dI_2}{dt}$ and $\varepsilon_2 = -M \dfrac{dI_1}{dt}$

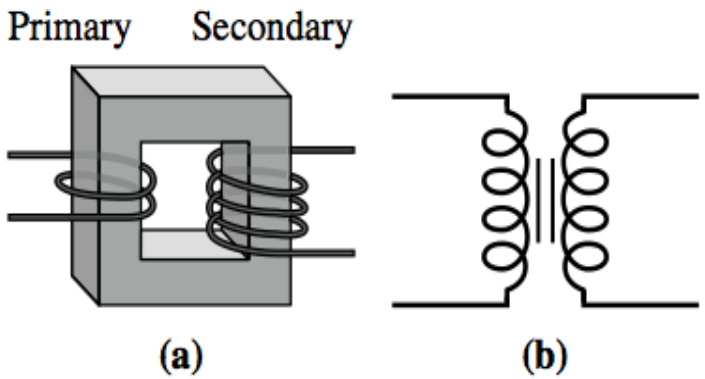

Example 7.8

- Simplify the network

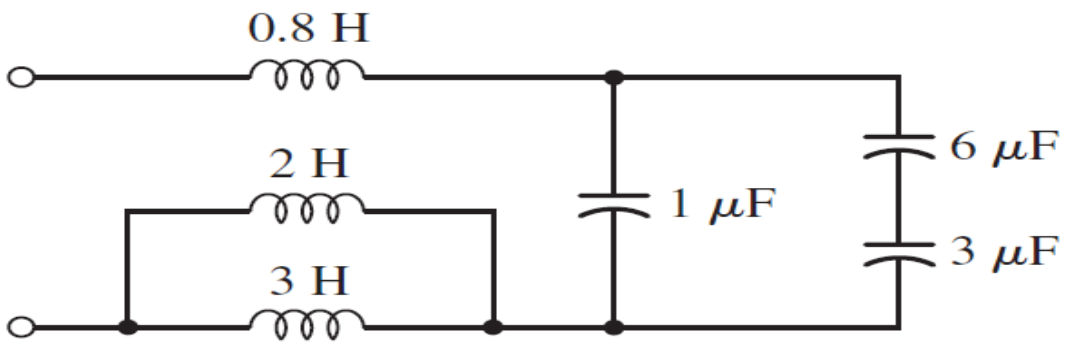

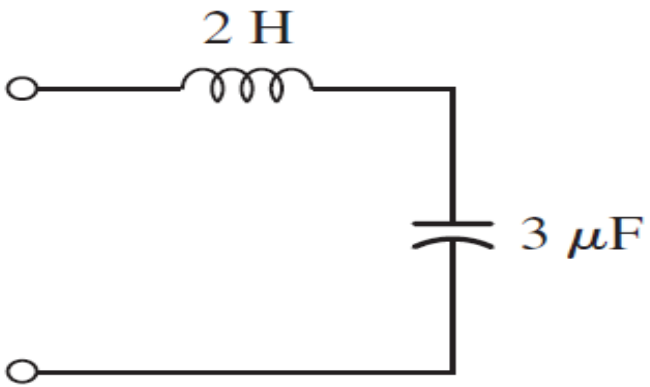

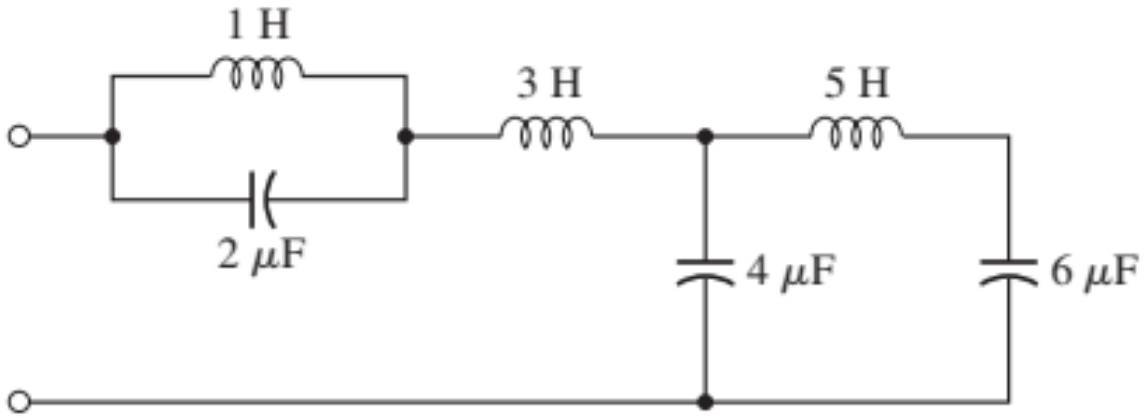

FIGURE 7.24 An *LC* network in which no series or parallel combinations of either the inductors or the capacitors can be made.

The network shown in Fig. 7.24 contains three inductors and three capacitors, but no series or parallel combinations of either the inductors or the capacitors can be achieved. Simplification of this network cannot be accomplished using the techniques presented here.

Find the maximum energy stored in the capacitor of Fig. 7.7 and the energy dissipated in the resistor over the interval $0 < t < 0.5$ s.

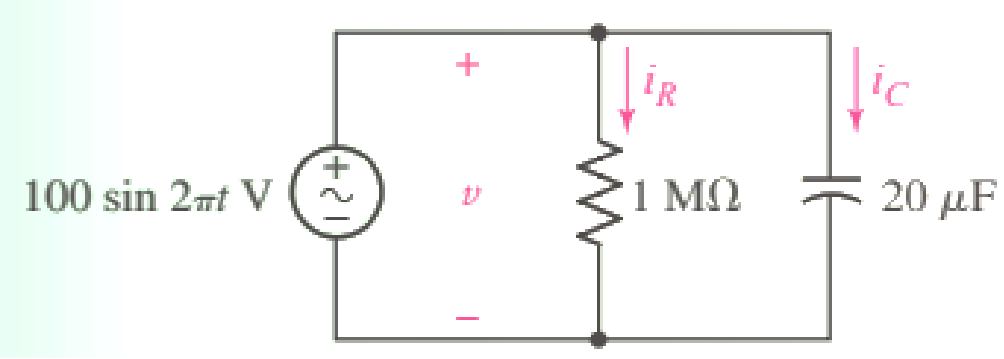

The energy stored in the capacitor is simply

$$w_C(t) = \tfrac{1}{2}Cv^2 = 0.1 \sin^2 2\pi t \qquad \text{J}$$

We obtain an expression for the power dissipated by the resistor in terms of the current i_R:

$$i_R = \frac{v}{R} = 10^{-4} \sin 2\pi t \qquad \text{A}$$

and so

$$p_R = i_R^2 R = (10^{-4})(10^6) \sin^2 2\pi t$$

so that the energy dissipated in the resistor between 0 and 0.5 s is

$$w_R = \int_0^{0.5} p_R \, dt = \int_0^{0.5} 10^{-2} \sin^2 2\pi t \, dt \qquad \text{J}$$

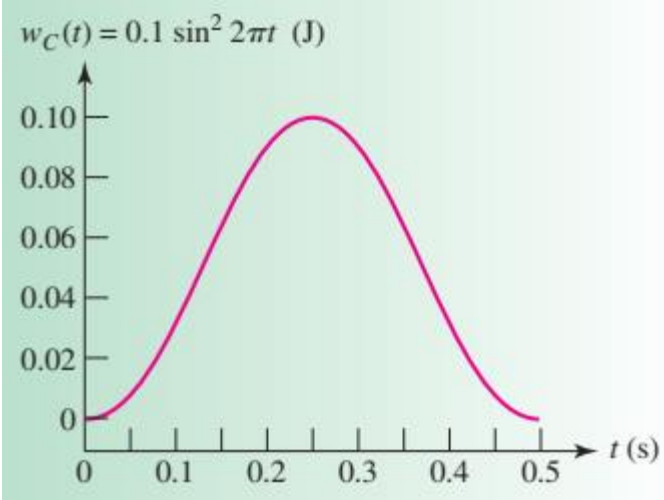

From our sketch of the expression for the energy stored in the capacitor, we see that it increases from zero at $t = 0$ to a maximum of 100 mJ at $t = \frac{1}{4}$ s, and then decreases to zero in another $\frac{1}{4}$ s. Thus, $w_{C_{max}} = 100$ mJ. Evaluating our integral expression for the energy dissipated in the resistor, we find that $w_R = 2.5$ mJ.

Find the maximum energy stored in the inductor of Fig. 7.16, and calculate how much energy is dissipated in the resistor in the time during which the energy is being stored in, and then recovered from, the inductor.

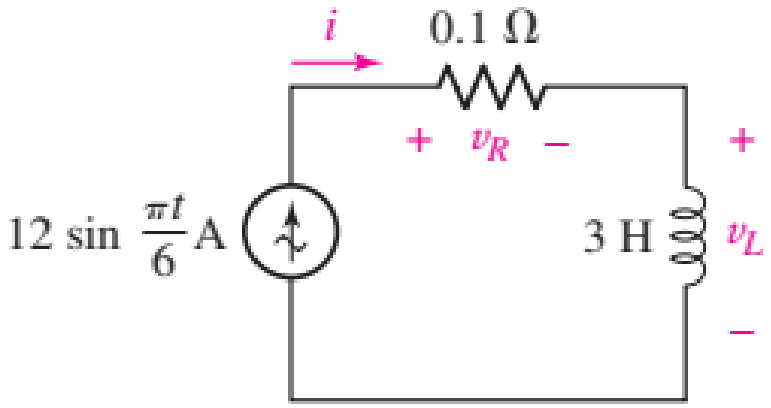

FIGURE 7.16 A sinusoidal current is applied as a forcing function to a series *RL* circuit. The 0.1 Ω represents the inherent resistance of the wire from which the inductor is fabricated.

The energy stored in the inductor is

$$w_L = \frac{1}{2}Li^2 = 216 \sin^2 \frac{\pi t}{6} \qquad \text{J}$$

and this energy increases from zero at $t = 0$ to 216 J at $t = 3$ s. Thus, the maximum energy stored in the inductor is 216 J.

After reaching its peak value at $t = 3$ s, the energy has completely left the inductor 3 s later. Let us see what price we have paid in this coil for the privilege of storing and removing 216 J in these 6 seconds. The power dissipated in the resistor is easily found as

$$p_R = i^2 R = 14.4 \sin^2 \frac{\pi t}{6} \qquad \text{W}$$

and the energy converted into heat in the resistor within this 6 s interval is therefore

$$w_R = \int_0^6 p_R \, dt = \int_0^6 14.4 \sin^2 \frac{\pi}{6} t \, dt$$

or

$$w_R = \int_0^6 14.4 \left(\frac{1}{2}\right)\left(1 - \cos \frac{\pi}{3} t\right) dt = 43.2 \text{ J}$$

Thus, we have expended 43.2 J in the process of storing and then recovering 216 J in a 6 s interval. This represents 20 percent of the maximum stored energy, but it is a reasonable value for many coils having this large an inductance. For coils having an inductance of about 100 μH, we might expect a figure closer to 2 or 3 percent.

Nodal equations for RLC circuit- Example

Example 7.9: Write appropriate nodal equations for the circuit

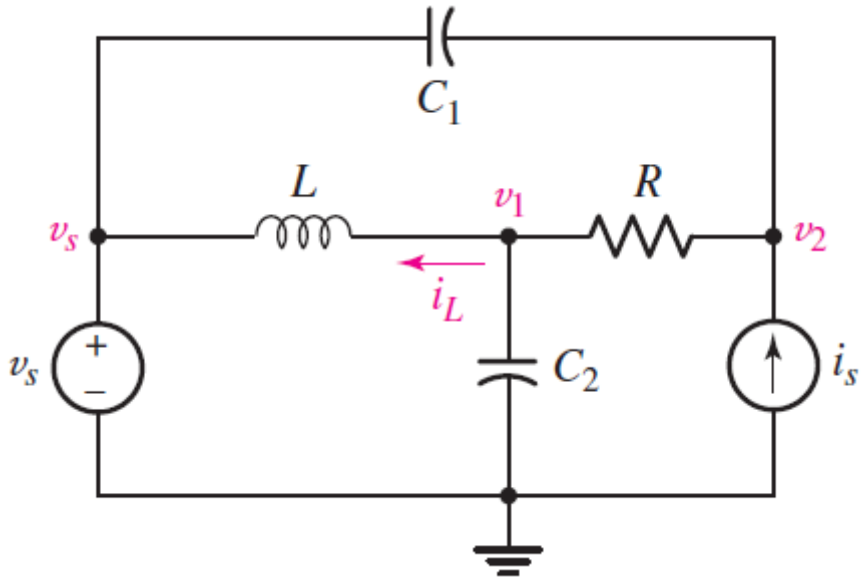

Node voltages are already chosen, so we sum currents leaving the central node:

$$\frac{1}{L}\int_{t_0}^{t}(v_1 - v_s)\,dt' + i_L(t_0) + \frac{v_1 - v_2}{R} + C_2\frac{dv_1}{dt} = 0$$

where $i_L(t_0)$ is the value of the inductor current at the time the integration begins. At the right-hand node,

$$C_1\frac{d(v_2 - v_s)}{dt} + \frac{v_2 - v_1}{R} - i_s = 0$$

Rewriting these two equations, we have

$$\frac{v_1}{R} + C_2\frac{dv_1}{dt} + \frac{1}{L}\int_{t_0}^{t} v_1\,dt' - \frac{v_2}{R} = \frac{1}{L}\int_{t_0}^{t} v_s\,dt' - i_L(t_0)$$

$$-\frac{v_1}{R} + \frac{v_2}{R} + C_1\frac{dv_2}{dt} = C_1\frac{dv_s}{dt} + i_s$$

These are the promised integrodifferential equations, and we note several interesting points about them. First, the source voltage v_s happens to enter the equations as an integral and as a derivative, but not simply as v_s. Since both sources are specified for all time, we should be able to evaluate the derivative or integral. Second, the initial value of the inductor current, $i_L(t_0)$, acts as a (constant) source current at the center node.

Duality

- Two circuits are "duals" if the mesh equations that characterize one of them have the same mathematical form as the nodal equations that characterize the other. They are said to be exact duals if each mesh equation of one circuit is numerically identical with the corresponding nodal equation of the other; the current and voltage variables themselves cannot be identical, of course.

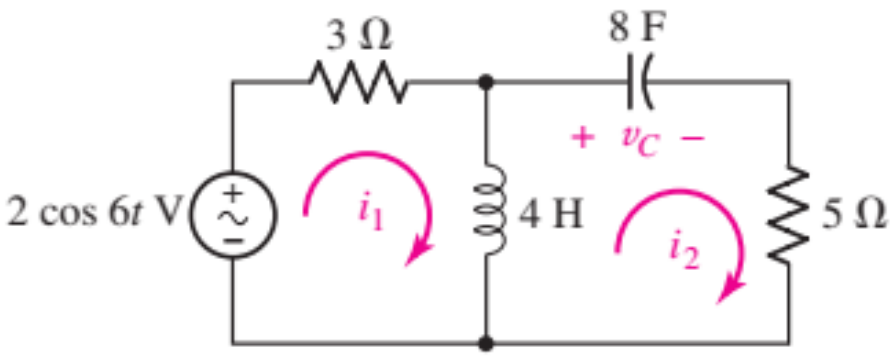

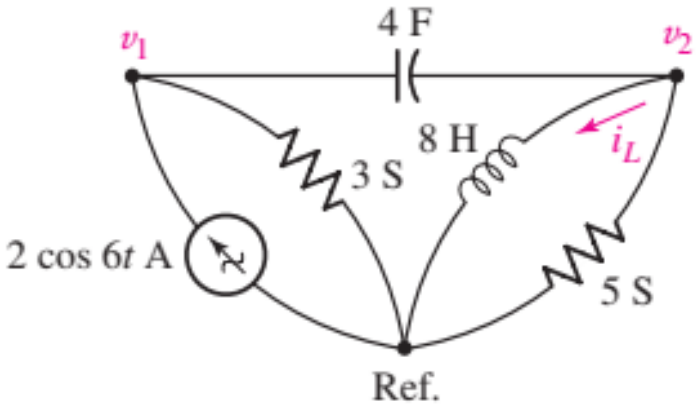

$$3i_1 + 4\frac{di_1}{dt} - 4\frac{di_2}{dt} = 2\cos 6t$$

$$-4\frac{di_1}{dt} + 4\frac{di_2}{dt} + \frac{1}{8}\int_0^t i_2\,dt' + 5i_2 = -10$$

$$3v_1 + 4\frac{dv_1}{dt} - 4\frac{dv_2}{dt} = 2\cos 6t$$

$$-4\frac{dv_1}{dt} + 4\frac{dv_2}{dt} + \frac{1}{8}\int_0^t v_2\,dt' + 5v_2 = -10$$

ECE 113- Basic Electronics

Lecture week 7: DC step response of RL and RC circuits

Dr. Ram Krishna Ghosh, Assistant Professor

Office: B601, Research and Development Block

Email: rkghosh@iiitd.ac.in

INDRAPRASTHA INSTITUTE *of*
INFORMATION TECHNOLOGY
DELHI

RC, RL, RLC circuits examples

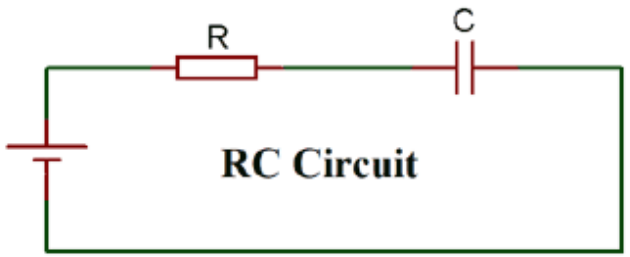

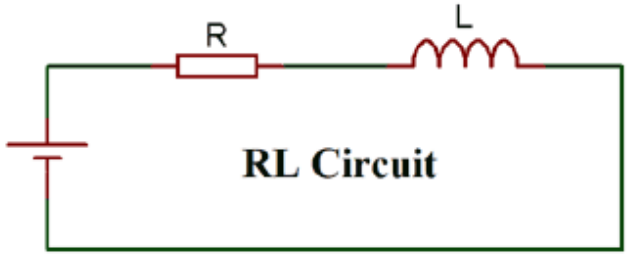

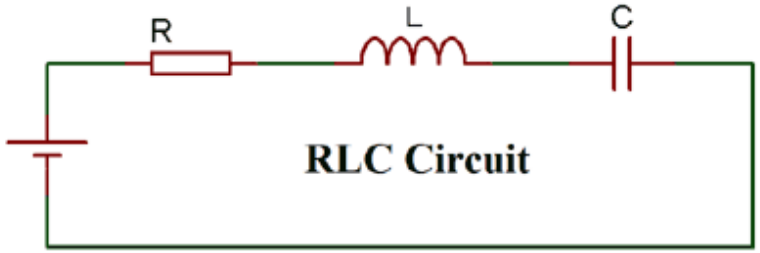

Circuit Elements

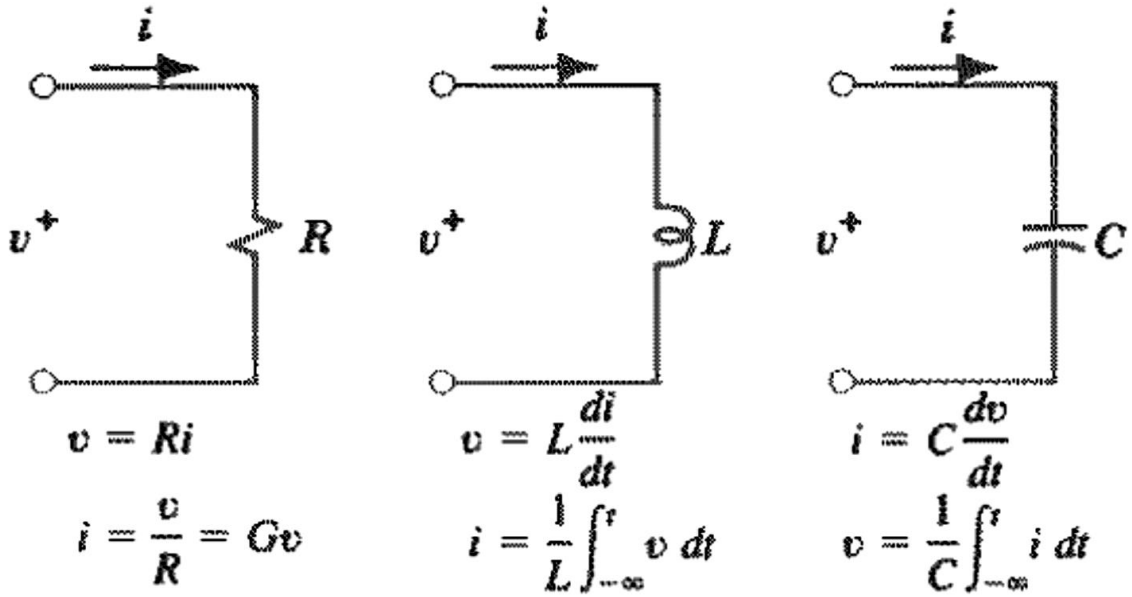

Resistance Inductance Capacitance

Response of a circuit

- In predicting the behavior of electrical circuit with L and C, we must take into account two different sources of energy:
    - External energy source known as forced response and
    - Internal energy source known as natural response
- External energy source in an electrical circuit may be a DC voltage, step input, pulse input, sinusoidal input etc.
- Forced response can be maintained indefinitely by continuously applying the input signal, where as natural response tends to die out.
- The natural response will reveal the characteristics of the system.
- After the natural response has become negligibly small, conditions are said to have reached the steady state.
- For L and C, we will express the circuit's behavior using differential equation. This is obtained by applying KCL and KVL and the equations are are homogeneous linear differential equations.
- Solution of this type of equation is voltage/current/charge as a function of time (in electrical circuit context)
- The solution is also called as **response** of a circuit
- In few lectures, we will study the behavior of RC, RL and RLC for non sinusoidal inputs.

First Order Circuits

- A first order circuit is characterized by a first order differential equation.
- There are two types of first order circuits:
  - Resistive capacitive, called RC
  - Resistive inductive, called RL

Combination of resistive elements and a capacitor or inductor

- There are also two ways to excite the circuits:
  - Initial conditions
  - Independent sources

Key Words:
Transient Response of Circuits, Time constant

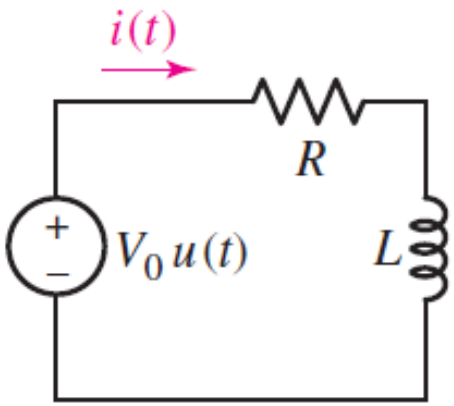

A driven RL circuit

$$L\frac{di}{dt} + Ri = V_0 u(t)$$

First order Circuits

- General form for first order, (linear) ordinary differential equation:

$$\frac{dx(t)}{dt} + ax(t) = f(t)$$

- x(t) is a circuit quantity (voltage, current, charge)
- a is a constant, some function of the circuit elements
- $f(t)$ is a forcing function, usually the source voltage or current

- Solution process:
  - Find the solution to the homogeneous equation
    - The solution is called the natural response (independent of the source applied)
    - A general solution has the form $x(t) = Ae^{-at}$
    - Often we write $x_n(t) = Ae^{-at}$
  - Look for a solution to the forced response
    - assume a forced response solution of the form $x_f(t)$
  - The complete solution is $x(t) = x_n(t) + x_f(t)$
  - Use initial conditions (i.e. x(0)) to determine constants

Complete response - General Approach

$$\frac{dx(t)}{dt} + Px(t) = Q$$

- For constant P and Q

$$x(t) = \frac{Q}{P} + Ae^{-Pt}$$

Forced response

Natural response

At t → ∞, forced response is basically the <u>steady state response</u>

Intuitive understanding of responses

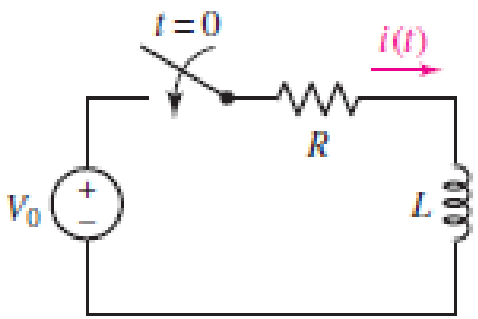

(a)

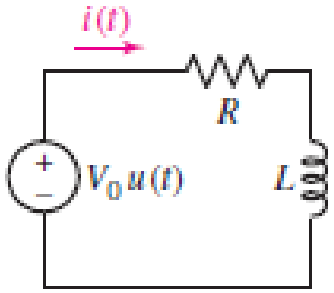

(b)

$$L\frac{di}{dt} + Ri = V_0 u(t)$$

Soln. $\Rightarrow i = \frac{V_0}{R} - \frac{V_0}{R}e^{-\frac{R}{L}t}$

- Consider the previous forced RL circuit
- The circuit will eventually assume the forced response
- That means, After the natural response has died out, there can be no voltage across the inductor. Hence,

$$i_f = \frac{V_0}{R}$$

$$i = Ae^{-\frac{R}{L}t} + \frac{V_0}{R}$$

- The current is zero prior to t = 0, and it cannot change value instantaneously since it is the current flowing through an inductor. Thus, the current is zero immediately after t = 0

$$0 = A + \frac{V_0}{R}$$

$$i = \frac{V_0}{R}(1 - e^{-\frac{R}{L}t})$$

Transient and steady state response

- The **complete response** can be written as:

$$v = v_n + v_f$$

- Where the nature response is v_n and forced response is v_f

- **natural response** is v_n $\quad v_n \sim e^{-t/\tau}$

- And the **forced response** is: $v_f = v - v_n$

- Note that the eventual response of the circuit is to reach $\boldsymbol{V_s}$ after the natural response decays to zero.

Another Perspective of response – transient and steady state response

- Another way to look at the response is to break it up into the transient response and the steady state response:

$$v = v_t + v_s$$

- Where the **transient response** is: $v_t = v - v_s$

- And the **steady state response** is: $v_s = V_s$

Therefore, transient response is equivalent to the natural response, as t → ∞, forced response is basically the <u>steady state response</u>

Source Free Circuit (natural response/discharging)

- A source free RC/RL circuit occurs when its dc source is suddenly disconnected.
- The **energy stored in the capacitor/inductor is released to the resistors**.
- Consider a series combination of a resistor and a initially charged capacitor or inductor as shown below:
- we will start with an initial condition (like fully charged capacitor or the steady state current of inductor circuit)

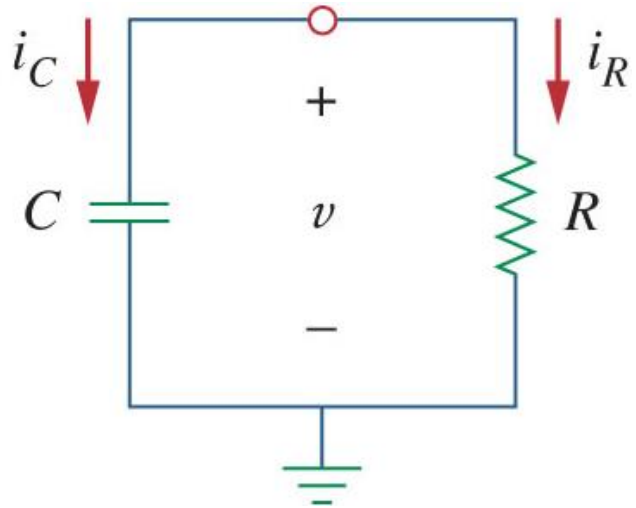

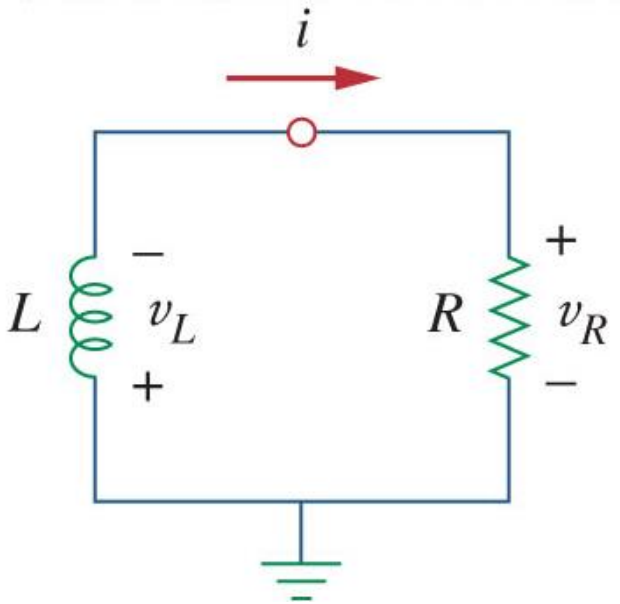

Natural/transient Response; Time Constant

- The result shows that the voltage response of the circuit is an exponential decay of the initial voltage.
- Since this is the response of the circuit without any external applied voltage or current, the response is called the natural response.
- **The speed at which the voltage decays (or increases during charging) can be characterized by how long it takes the voltage to drop (or gain during charging) to *1/e* of the initial voltage (or final voltage during charging).**
- **This is called the time constant and is represented by τ.**
- After five time constants the voltage on the capacitor is less than one percent.
- After five time constants a capacitor/inductor is considered to be either fully discharged or charged
- A circuit with a small time constant has a fast response and vice versa.

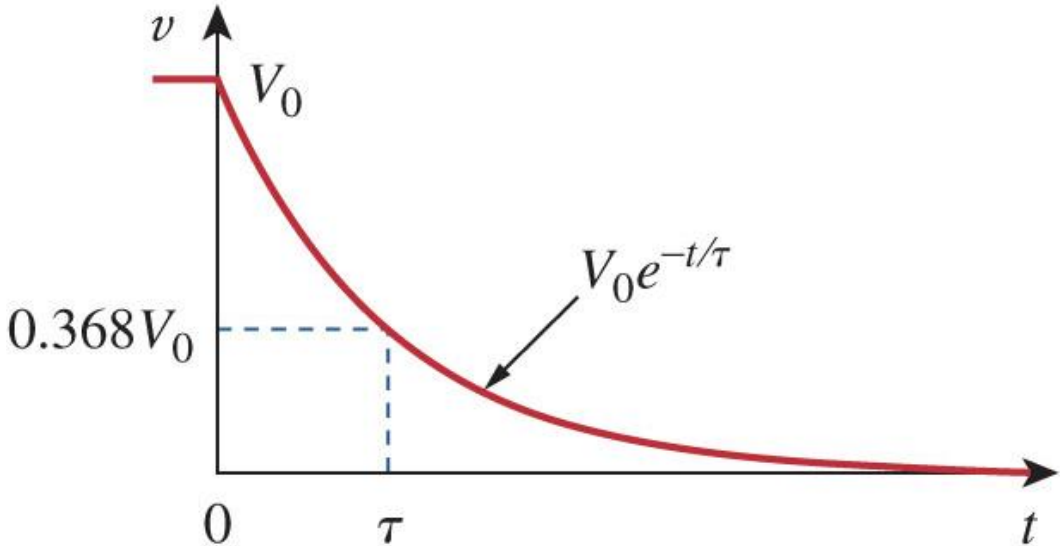

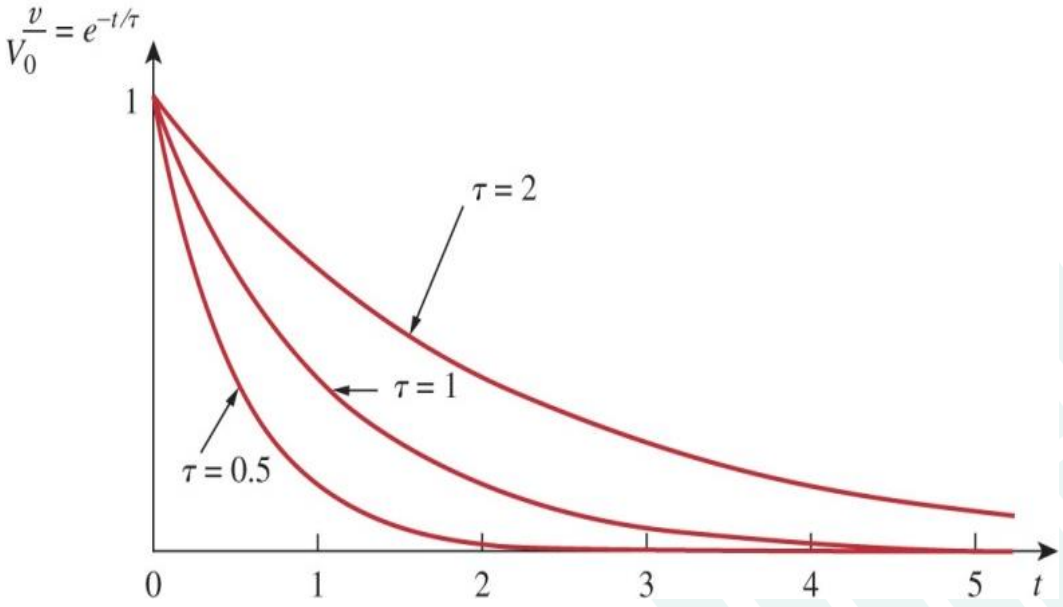

Singularity Functions

- Before we consider the response of a circuit to an external voltage, we need to cover some important mathematical functions.
- Singularity functions serve as good approximations to switching on or off a voltage.
- The three most common singularity functions are the <u>unit step</u>, <u>unit impulse</u>, and <u>unit ramp</u>.

The Unit Step

- A step function is one that maintains a constant value before a certain time and then changes to another constant afterwards.
- The prototypical form is zero before *t=0* and one afterwards.
- See the graph for an illustration.

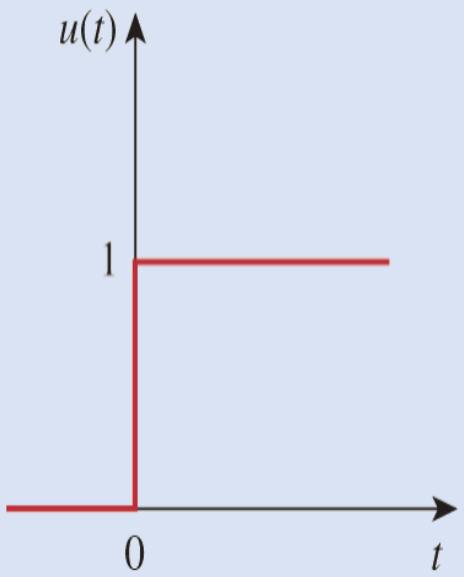

- Mathematically, the unit step is expressed as:

$$u(t) = \begin{cases} 0, & t < 0 \\ 1, & t > 0 \end{cases}$$

- The switching time may be shifted to $t=t_0$ by:

$$u(t - t_0) = \begin{cases} 0, & t < t_0 \\ 1, & t > t_0 \end{cases}$$

- Note that this results in a *delay* in the switch.
- The unit step function is written as *u(t)*

The Unit Step and Equivalent Circuit

- The unit step function $u(t)$ is 0 for negative values of t and 1 for positive values of t.

$$u(t) = \begin{cases} 0, & t < 0 \\ 1, & t > 0 \end{cases}$$

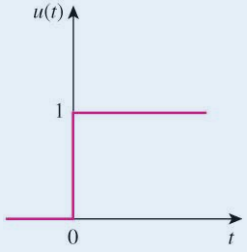

$$u(t - t_o) = \begin{cases} 0, & t < t_o \\ 1, & t > t_o \end{cases}$$

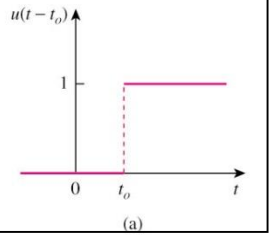

$$u(t + t_o) = \begin{cases} 0, & t < -t_o \\ 1, & t > -t_o \end{cases}$$

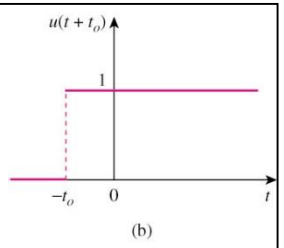

- The unit step function has an equivalent circuit to represent when it is used to switch on a source.
- The equivalent circuits for a voltage and current source are shown.

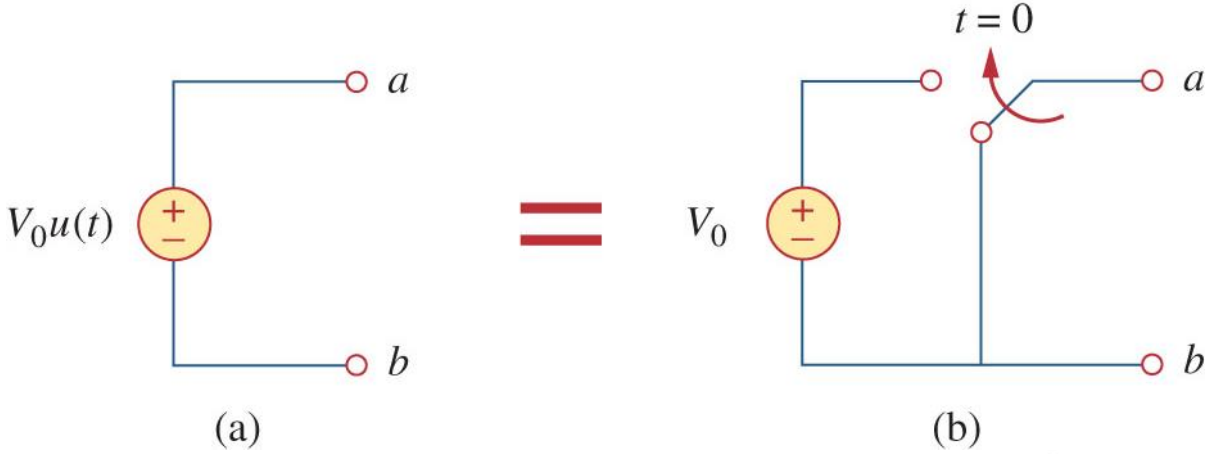

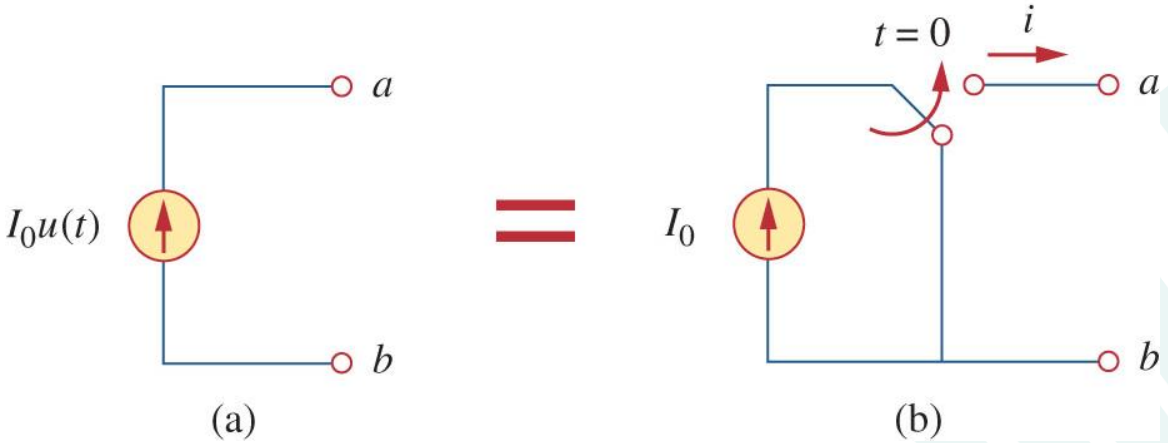

The Unit Impulse and Unit Ramp Function

- **The derivative of the unit step function is the unit impulse function.**
- This is expressed as:

$$\delta(t) = \begin{cases} 0 & t < 0 \\ \text{Undefined} & t = 0 \\ 0 & t > 0 \end{cases}$$

- Voltages of this form can occur during switching operations.

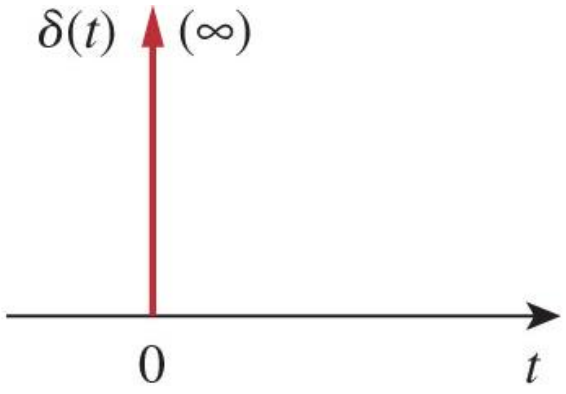

- **Integration of the unit step function results in the unit ramp function:**

$$r(t) = \begin{cases} 0, & t \le 0 \\ t, & t \ge 0 \end{cases}$$

- Much like the other functions, the onset of the ramp may be adjusted.

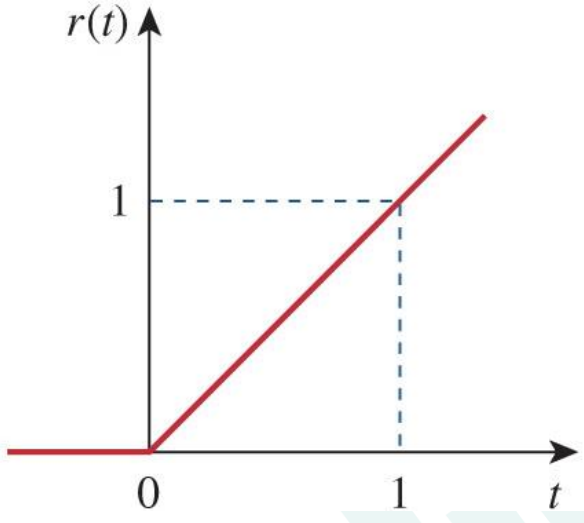

Example of a ramp function

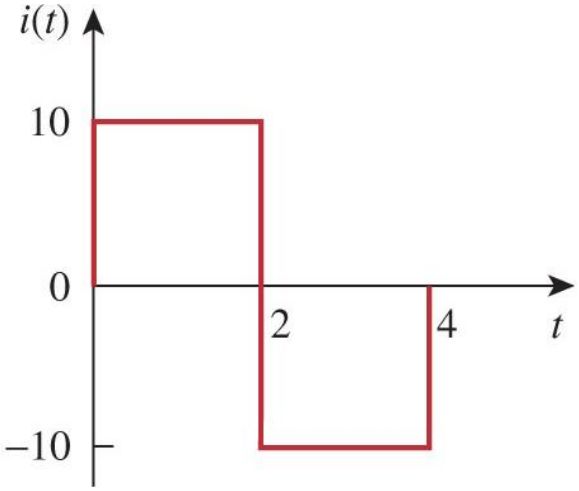

$$i(t) = \begin{cases} 0 & t < 0 \\ 10 & 0 < t < 2 \\ -10 & 2 < t < 4 \end{cases}$$

$$i(t) = 10[u(t) - u(t-2)] - 10[u(t-2) - u(t-4)]$$

$$i(t) = \mathbf{10[u(t) - 2u(t-2) + u(t-4)]A}$$

Let $I = \int_{-\infty}^{t} i\,dt$.

For $t < 0$, $I = 0$.

For $0 < t < 2$, $I = \int_0^t 10\,dt = 10t$

For $2 < t < 4$, $I = \int_0^2 10\,dt - 10\int_2^t dt = 20 - 10t\Big|_2^t = 40 - 10t$

For $t > 4$, $I = 20 - 10t\Big|_4^4 = 0$

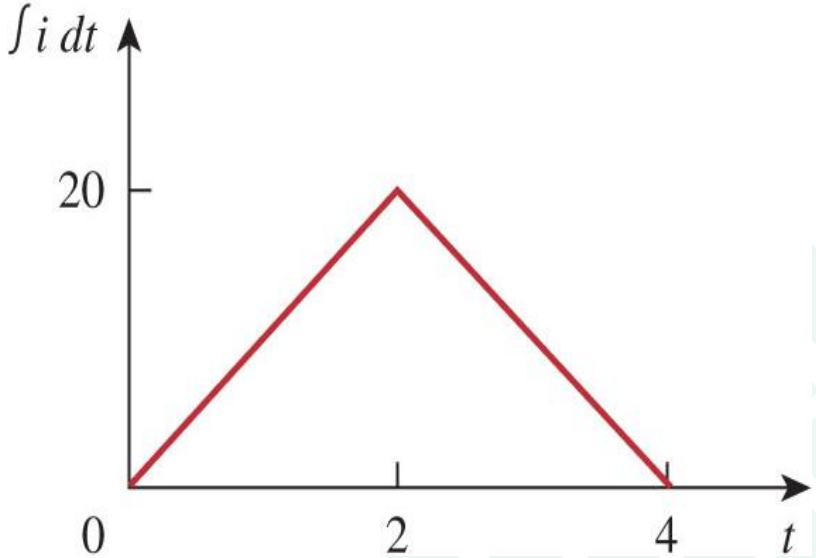

Step Response of series RL/RC Circuit (charging)

- When a DC source is suddenly applied to a RC/RL circuit, the source can be modeled as a **step function**.
- The circuit response is known as the *step response*.
- Let's consider the circuit shown here.
- We will use the transient and steady state response approach.
- We know that the transient response will be an exponential:

$$i_t = Ae^{-t/\tau}$$

- We can find the voltage on the inductor/capacitor/resistor as a function of time.

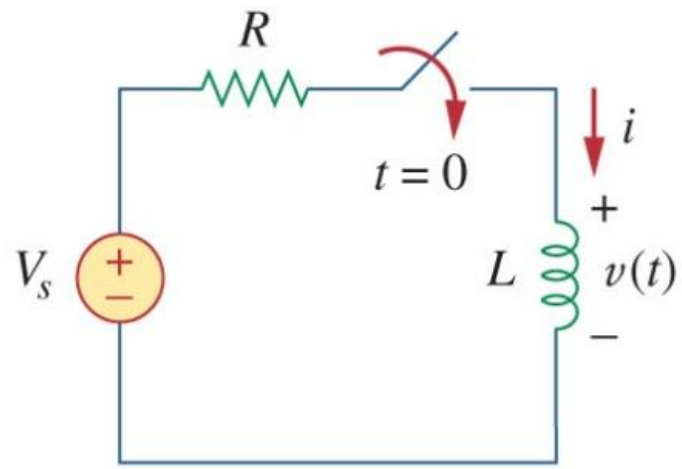

(a)

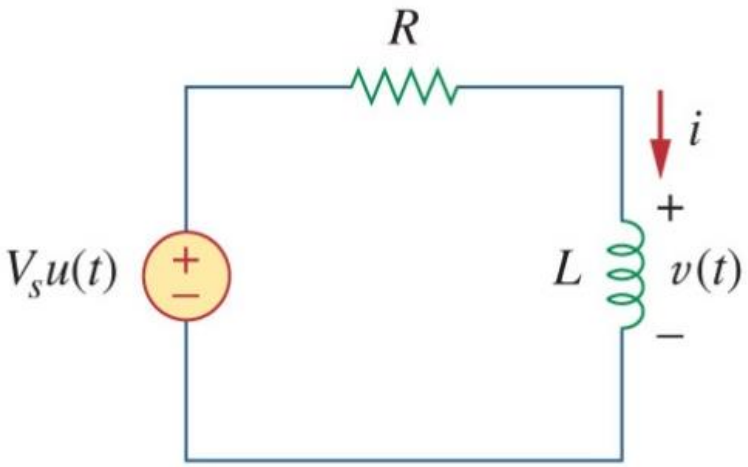

(b)

Series RL circuit (charging/growth of current/forced response)

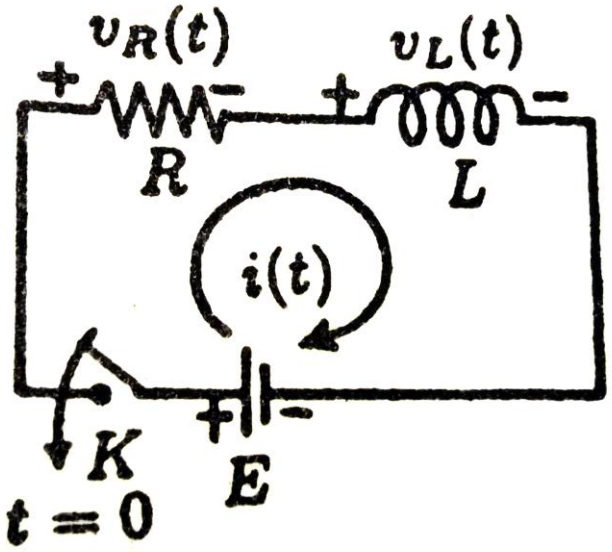

Fig.14.2. A series *RL* circuit

Suppose, the key K is closed at time $t = 0$

Let $\boldsymbol{i(t)}$ is the current in the circuit at any time 't' after closing the switch K.

So, $$L\frac{di}{dt} + Ri = E \quad \Rightarrow \frac{di}{E - Ri} = \frac{dt}{L}$$

Which upon integration gives, $$\Rightarrow -\frac{1}{R}\ln(E - Ri) = \frac{t}{L} + C_1$$

C_1 : integration const.

At, $t = 0$, $i = 0$. Hence, $$C_1 = -\frac{1}{R}\ln E$$

Therefore, $$\ln\frac{E - Ri}{E} = \frac{-Rt}{L} \quad \Rightarrow 1 - \frac{Ri}{E} = e^{\frac{-R}{L}t} \quad \Rightarrow \boxed{i = \frac{E}{R}(1 - e^{\frac{-R}{L}t})}$$

Variation of current with time

Steady state current (i_s) is obtained for $t \rightarrow \infty$ $$\Rightarrow i_s = \frac{E}{R}$$

The transient current (i_t) is therefore, $$\Rightarrow i_t = i - i_s = -\frac{E}{R}e^{-\frac{R}{L}t}$$

At $t \rightarrow \infty$; $i_t \rightarrow 0$

Contd..

The variation of i with t, i.e., the growth of the current in RL circuit

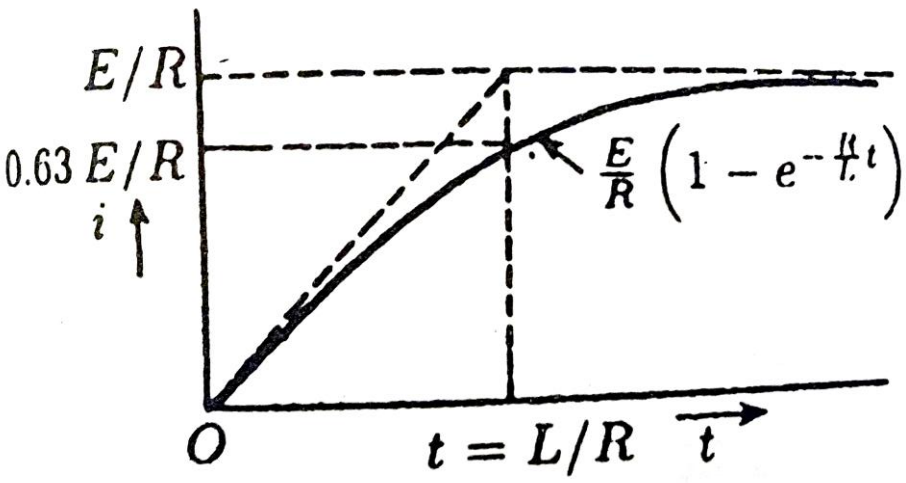

The quantity L/R has a dimension of time and is called the time-constant of the circuit (denoted by τ)

$$\text{At } t = \tau = L/R, \quad \Rightarrow i = i_s\left(1-\frac{1}{e}\right) = 0.63 i_s$$

- i.e. the <u>time taken for the current to reach 0.63 or 63% of the final value is the time constant for this charging circuit</u>.
- It measures the rapidity with which the final state is approached.
- The greater the L and smaller the R, the larger the time constant, τ, i.e. the longer the time taken to attain the steady state.

The tangent to the eq. of i at $t = 0$ intersects the straight line $i = E/R$ at $t = \tau = L/R$ (see the fig). Thus the time constant can also be defined as the time in which the steady state would be reached if the current was allowed to increase at the initial rate.

Contd..

The time dependence of the voltage drop across the resistance R is given by

$$v_R(t) = Ri(t) = E(1 - e^{-t/\tau})$$

where $\tau = L/R$

The voltage drop across the inductance L is

$$v_L(t) = E - v_R(t) = Ee^{-t/\tau}$$

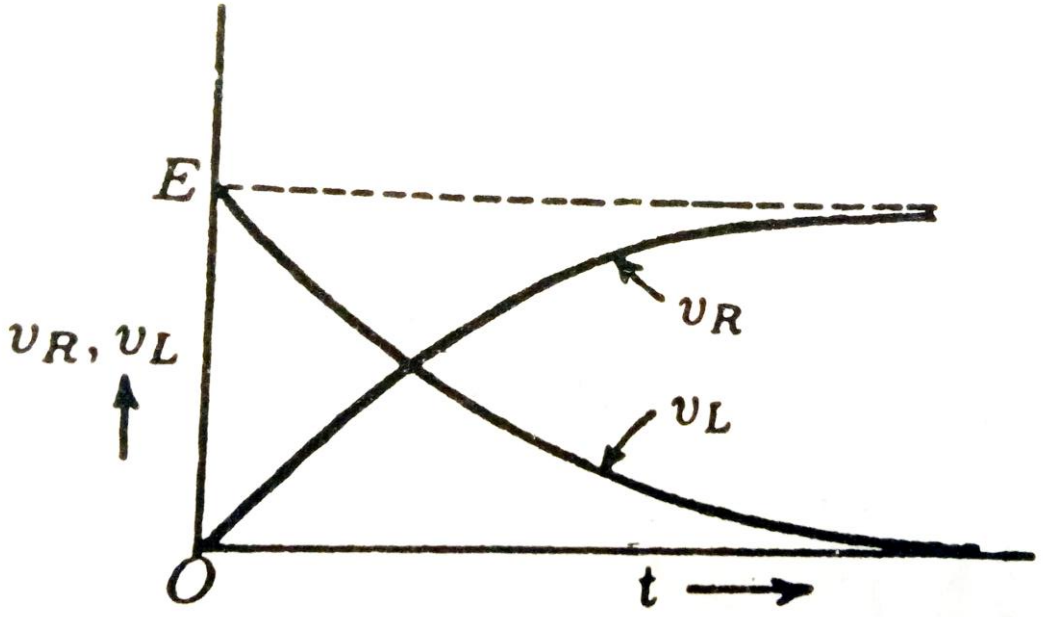

Fig.14.4. Time dependence of v_R and v_L

Find the time constant of this circuit

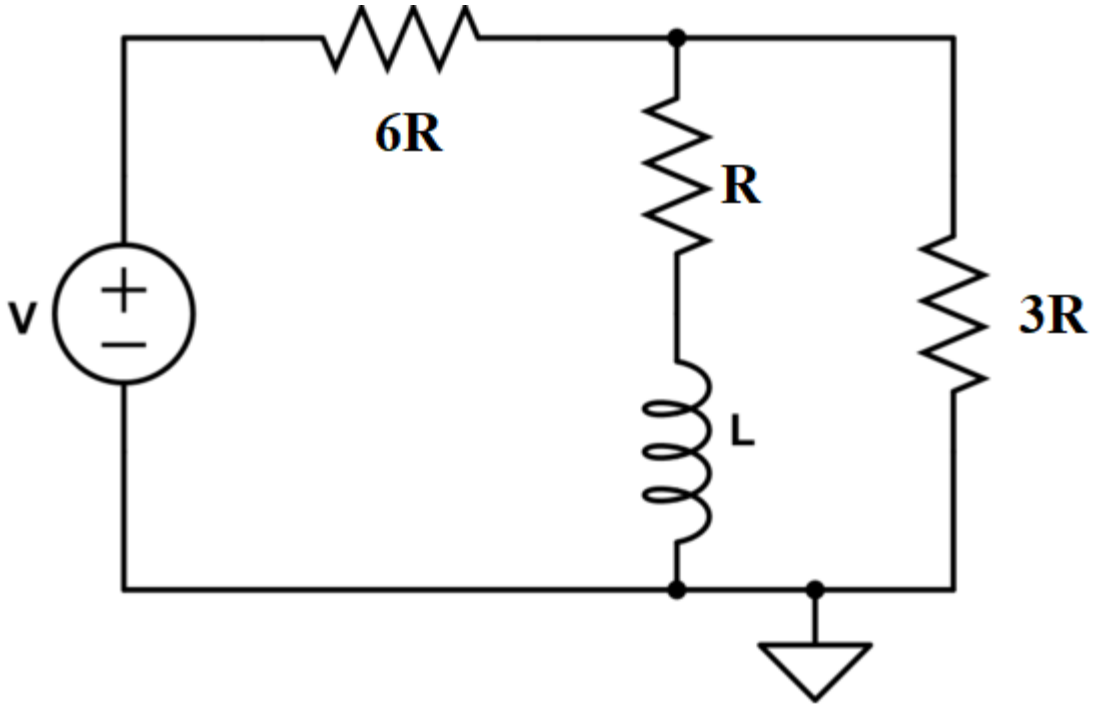

Parallel RL circuit

Figure shows a parallel RL circuit driven by a current source $I_{in}(t)$. Derive the characteristic equation of this circuit.

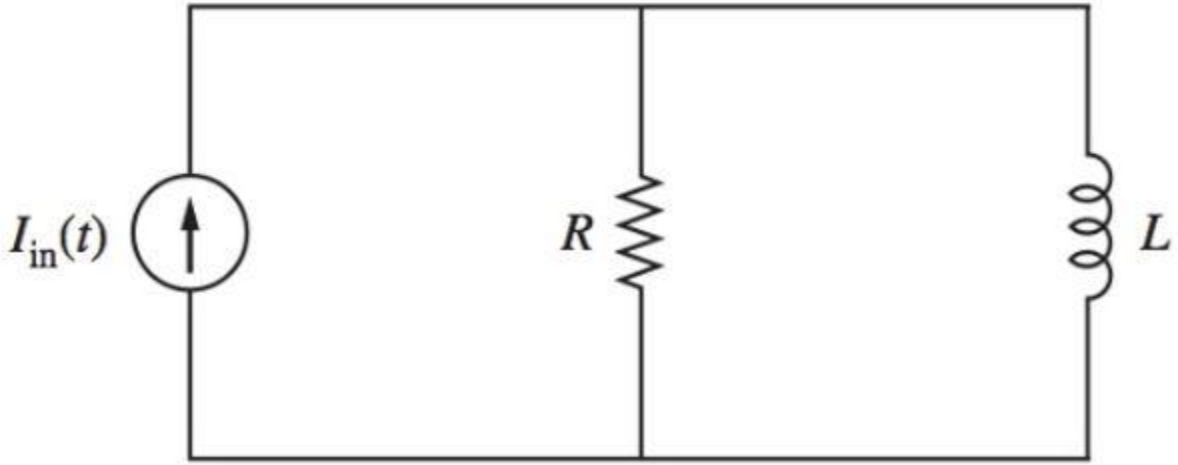

$$i_N(t) = \left(\frac{L}{R}\right)\frac{di(t)}{dt} + i(t)$$

Exercise

In the circuit shown below find out the expressions the characteristic differential equation when the switch is closed at time t= 0

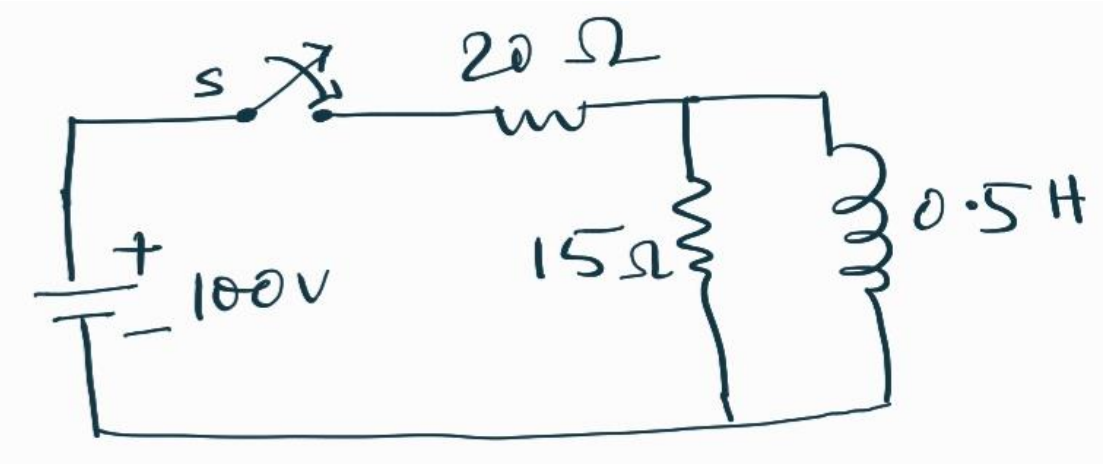

$$\frac{di_L}{dt} + 17.14 i_L = 85.7$$

Discharging/decay of current/natural response

Here, the switch K_2 is initially open and the switch K_1 is initially closed for a sufficient long time so that the steady state has been reached in the series RL circuit. The steady state current is $i_s = E/R$

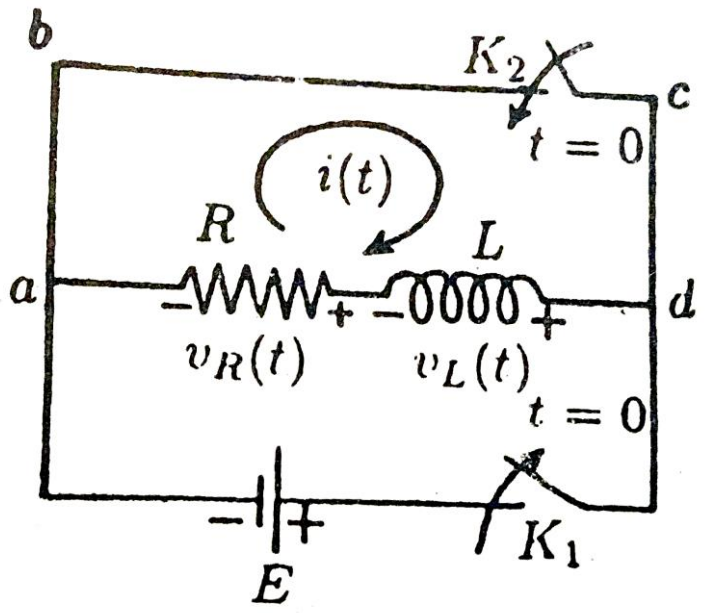

Fig.14.5. Decay of current in a series *RL* circuit

After the steady state current, at time $t = 0$ the switch K_1 is opened and simultaneously K_2 is closed. In the closed path *abcd,* the driving emf is zero. So, it's the natural response. *Using KVL,*

$$L\frac{di}{dt} + Ri = 0 \quad \Rightarrow \frac{di}{i} = -\frac{R}{L}dt$$

Integration gives, $\Rightarrow \ln i = -\frac{R}{L}t + C_2$ $\quad C_2$: integration const.

At, $t = 0$, $i = i_s = E/R$. So, $C_2 = \ln i_s = \ln\frac{E}{R}$

$$\therefore \ln\left(\frac{i}{i_s}\right) = -\frac{R}{L}t \Rightarrow \boxed{i = i_s e^{-\frac{R}{L}t} = \frac{E}{R}e^{-\frac{R}{L}t}}$$

Decay of the current in series RL circuit after sudden removal of the emf.

Contd..

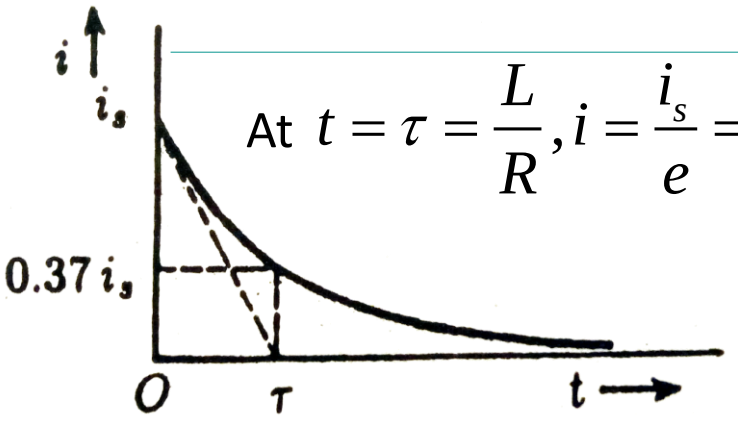

At $t = \tau = \frac{L}{R}, i = \frac{i_s}{e} = 0.37 i_s$

Fig.14.6. Decay of current in RL curcuit

- The time constant L/R is the time taken by the current to decay to 0.37 or 37% of its initial value. Again, it is the rapidity of the decay of the current. The smaller the L and greater the R, the quicker the decay of the current.
- The tangent to the eq. of i at $t = 0$ intersects the time axis $t = \tau = L/R$ (see the fig). Thus time constant can also be viewed as the time in which the current would decay to zero, if it was allowed to decrease at the initial rate, i.e., the rate at $t=0$.

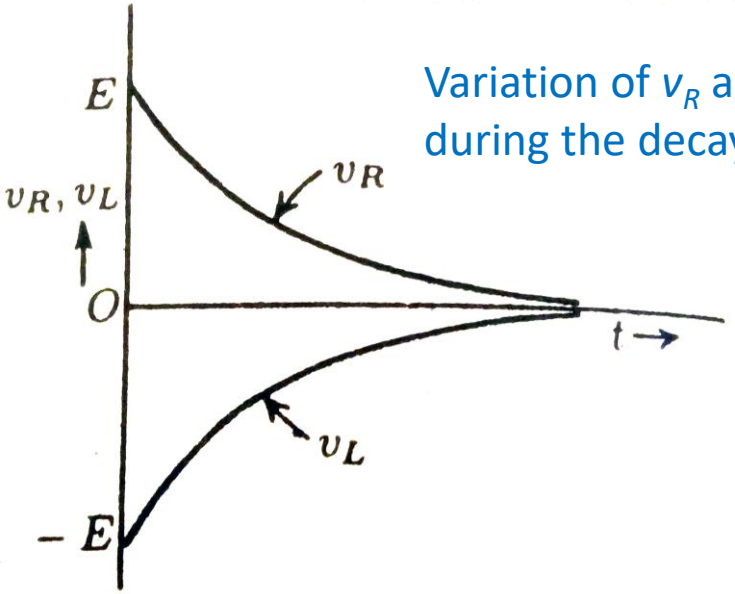

Variation of v_R and v_L with t during the decay of current

The time dependence of the voltage drop across the resistance R is given by

$$v_R(t) = Ri(t) = Ee^{-\frac{R}{L}t}$$

The voltage drop across the inductance L is $v_L(t) = -v_R(t) = -Ee^{-\frac{R}{L}t}$

-ve sign in v_L shows that the polarity of v_L is opposite to that assumed in the analysis

Question: If at $t=0$, only switch K_1 is opened and K_2 is not simultaneously closed, then what will happen?

In the circuit shown below find an expression for the current i(t) when the switch is changed from position I to II at time t= 0 .

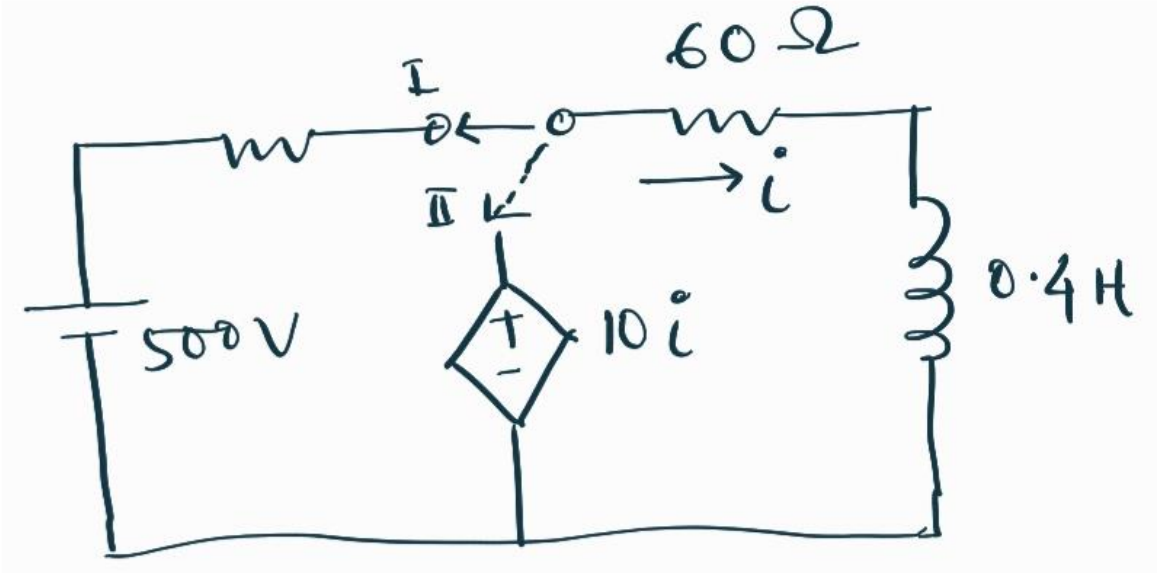

$$0.4\frac{di}{dt} + 60i = 10i$$

$$\Rightarrow \frac{di}{dt} + 125i = 0$$

final ans: $i(t) = 5e^{-125t}$ A

Series RC circuit (charging/growth of charge/forced response)

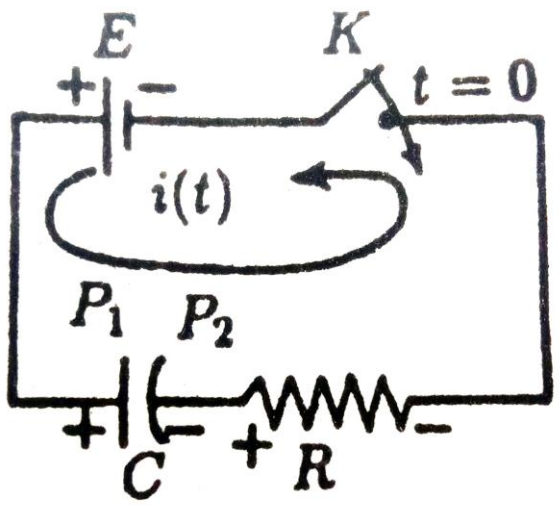

Fig.14.8. Charging of a capacitor through a resistance

The current ***i*(*t*)** that flows in the circuit is the charging current.

At any instant of time '*t*' after closing the key K, the voltage across the capacitor is $v_C(t)$ and across the resistance is $v_R(t)$. Then from KVL,

$$v_C(t) + v_R(t) = E$$

We have, $v_C(t) = \dfrac{q}{C}$ and $v_R(t) = Ri = R\dfrac{dq}{dt}$ as, $i = \dfrac{dq}{dt}$ and $q = Cv_C$

$$\therefore \frac{q}{C} + R\frac{dq}{dt} = E \Rightarrow \frac{dq}{E - q/C} = \frac{dt}{R}$$

Integrating we have, $-C\ln\left(E - \dfrac{q}{C}\right) = \dfrac{t}{R} + C_3$ C_3 : integration const.

At $t = 0$, $q = 0$, therefore, $C_3 = -C\ln E$ $\therefore \ln\left(\dfrac{E - q/C}{E}\right) = -\dfrac{t}{CR} \Rightarrow \boxed{q = EC\left(1 - e^{-t/(CR)}\right)}$

Therefore, at $t = \infty$, $q = q_0 = EC$ is the final charge of the capacitor

Contd..

Growth of the capacitor charge

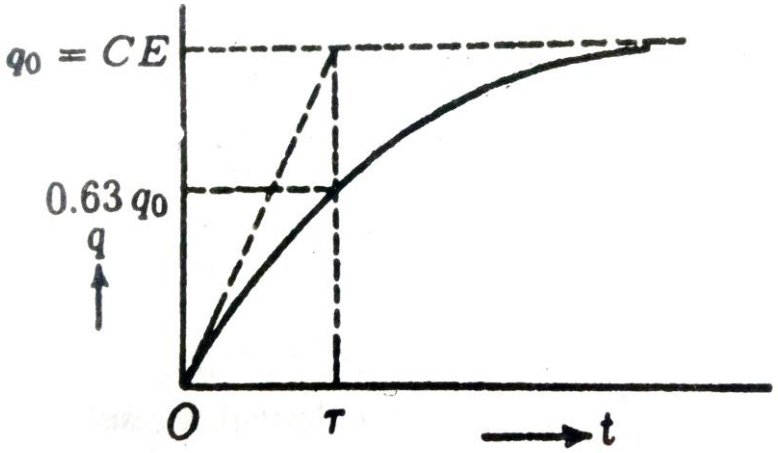

Fig.14.9. Variation of capacitor charge with time during charging

$t = \tau = CR$ = time constant of the RC circuit

At $t = \tau = CR$, $\Rightarrow q = q_0\left(1-\frac{1}{e}\right) = 0.63q_0$

The tangent to the growth curve at $t = 0$ intersects the line $q = q_0 = CE$ at $t = \tau = CR$ (see the fig). Thus the time constant can also be defined as the time in which the capacitor would be fully charged if it was allowed to charge at the initial rate.

The charging current,

$$i = \frac{dq}{dt} = \frac{q_0}{CR}e^{-\left(\frac{t}{CR}\right)} = i_0 e^{-\left(\frac{t}{CR}\right)}$$

where $i_0 = q_0/CR$ is the initial current at $t = 0$.

Clearly, with increasing time, the current i decays exponentially with the time constant $\tau = CR$. The $v_R(t)$ and $v_C(t)$ are,

$$v_R(t) = Ri = \frac{q_0}{C}e^{-t/CR} = Ee^{-t/CR}$$

$$v_C(t) = E - v_R(t) = E(1-e^{-t/CR})$$

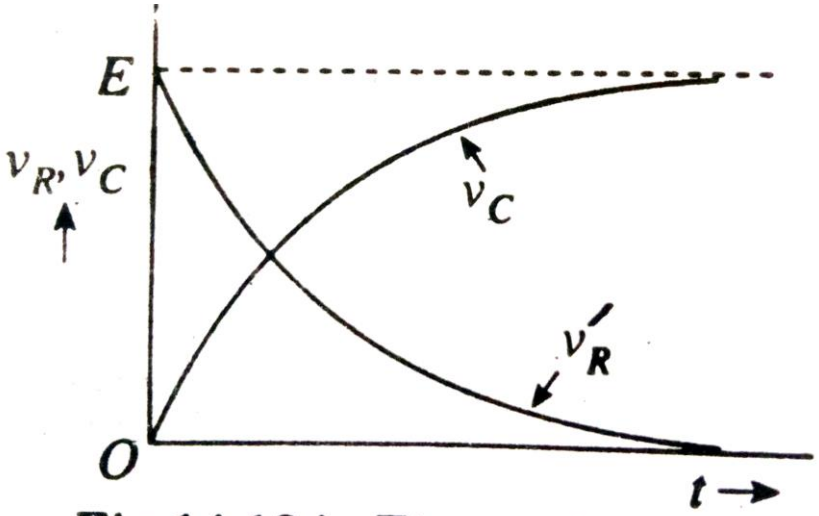

Fig.14.10A. Time variation of v_R and v_C

Discharging (natural response) of the Series RC circuit

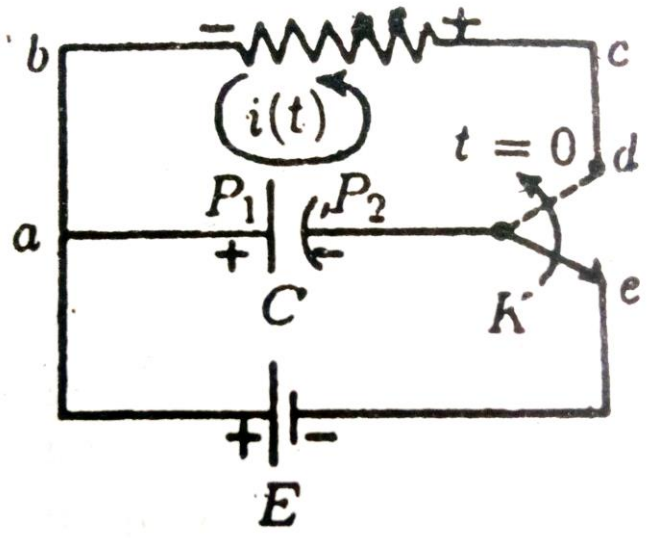

Fig.14.10. Discharging of a capacitor through a resistance

- In the circuit, switch K is initially at position *e* so that the capacitor is fully charged i.e. $q_0 = CE$ and switch is then moved quickly to position *d* at time $t = 0$
- The current corresponding to this is called discharging current and during discharging, the electrostatic energy of the capacitor is dissipated as the Joule heat in the resistance R.
- If q(t) is the charge at time t and as we have $i = dq/dt$, so, in the closed path *abcd,* KVL will give

$$\frac{q}{C} + R\frac{dq}{dt} = 0 \Rightarrow \frac{dq}{q} = -\frac{dt}{CR}$$

Integrating we have, $\ln q = -\frac{t}{CR} + C_4$ $\quad C_4$: integration const.

At $t = 0$, $q = q_0$, therefore, $C_4 = \ln q_0$

$$\Rightarrow \ln\left(\frac{q}{q_0}\right) = -\frac{t}{CR} \Rightarrow q = q_0 e^{-t/CR}$$

Charge on the capacitor decays exponentially with time.

Contd..

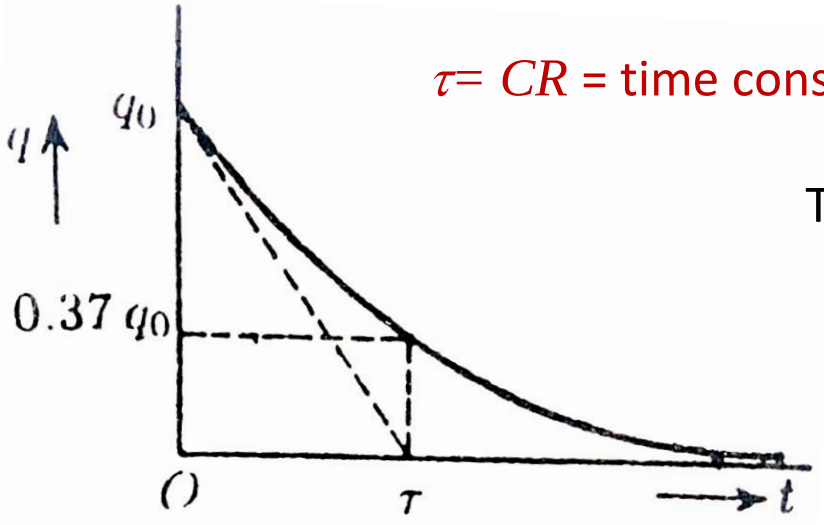

Fig.14.11. Decay of capacitor charge with time

$\tau = CR$ = time constant of the RC circuit

At $t = \tau = CR$, $\Rightarrow q = q_0/e = 0.37 q_0$

Therefore, at $t = \tau = CR$, capacitor charge falls to 37% of its initial value

The discharging current, $i = \dfrac{dq}{dt} = -\dfrac{q_0}{CR} e^{-\left(\frac{t}{CR}\right)} = -i_0 e^{-\left(\frac{t}{CR}\right)}$

The '– ve' current indicates the current $i(t)$ flows in the direction opposite to that was assumed in the analysis and shown in the circuit. The maximum value of the current $i(t)$ is q_0/CR occurring at $t = 0$.

The $v_R(t)$ and $v_C(t)$ during discharging are,

$$v_R(t) = Ri = -\frac{q_0}{C} e^{-t/CR} = -Ee^{-t/CR} \qquad v_C(t) = \frac{q}{C} = \frac{q_0}{C} e^{-t/CR} = Ee^{-t/CR}$$

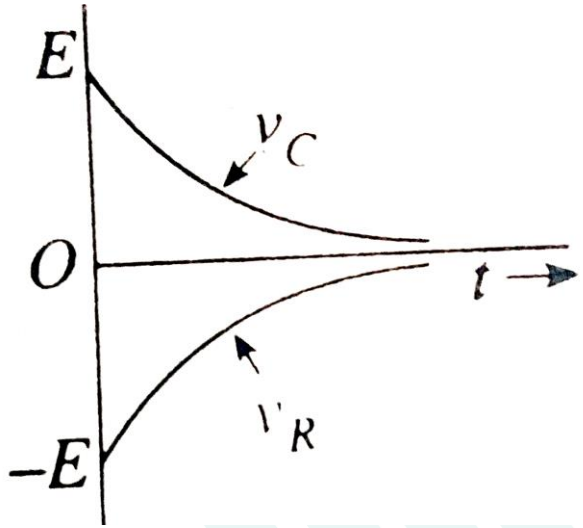

'– ve' sign in $v_R(t)$ signifies that the polarity of the voltage drop across R is opposite to that assumed in the analysis

Observation:

If a signal voltage v_i is applied to a series RC circuit, then E in the KVL will be v_i and thus we can write $v_C + v_R = v_i$

Then the voltage across the capacitor C is, $v_C = \frac{q}{C} = \frac{1}{C}\int i dt$ Since, $i = \frac{dq}{dt}$

$$\Rightarrow v_C = \frac{1}{CR}\int v_R dt \Rightarrow v_C = \frac{1}{CR}\int (v_i - v_C) dt$$ Since, $v_R = iR$

If $\boldsymbol{v_i >> v_C}$; Then $v_C = (1/CR)\int v_i dt$ i.e. the capacitor voltage is proportional to the integral of the input voltage.

The circuit is then referred to as an ***Integrating circuit*** or an ***integrator***. The condition $v_i >> v_C$ is when the <u>time constant CR of the circuit is very large</u> so that the capacitor charges up slowly.

Again, the voltage across the resistance R is, $v_R = iR = R\frac{dq}{dt} = CR\frac{dv_C}{dt} = CR\frac{d}{dt}(v_i - v_R)$

If $\boldsymbol{v_i >> v_R}$; Then $v_R = CR\frac{dv_i}{dt}$ i.e. the voltage is across R proportional to the time derivative of the input voltage.

The circuit is then referred to as an ***differentiating circuit*** or an ***differentiator***. The condition $v_i >> v_R$ is achieved when the <u>time constant CR of the circuit is very small</u> so that the capacitor is quickly charged.

Another way to realize natural response of a RC circuit

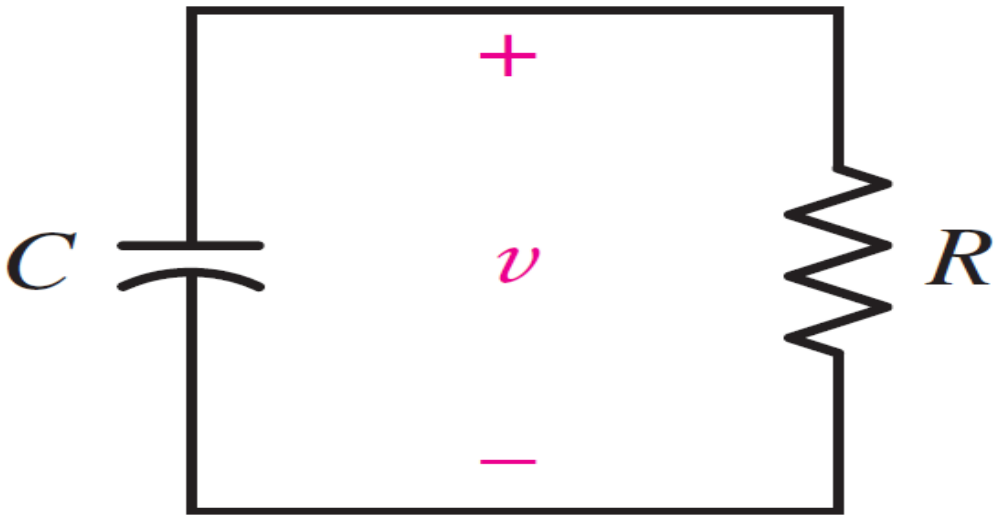

Initial condition: $v(0) = V_0$

$$C\frac{dv}{dt} + \frac{v}{R} = 0$$

Or

$$\frac{dv}{dt} + \frac{v}{RC} = 0$$

$$v(t) = V_0 e^{-\frac{t}{RC}}$$

Time constant $\tau = RC$

Find the time constant of this circuit

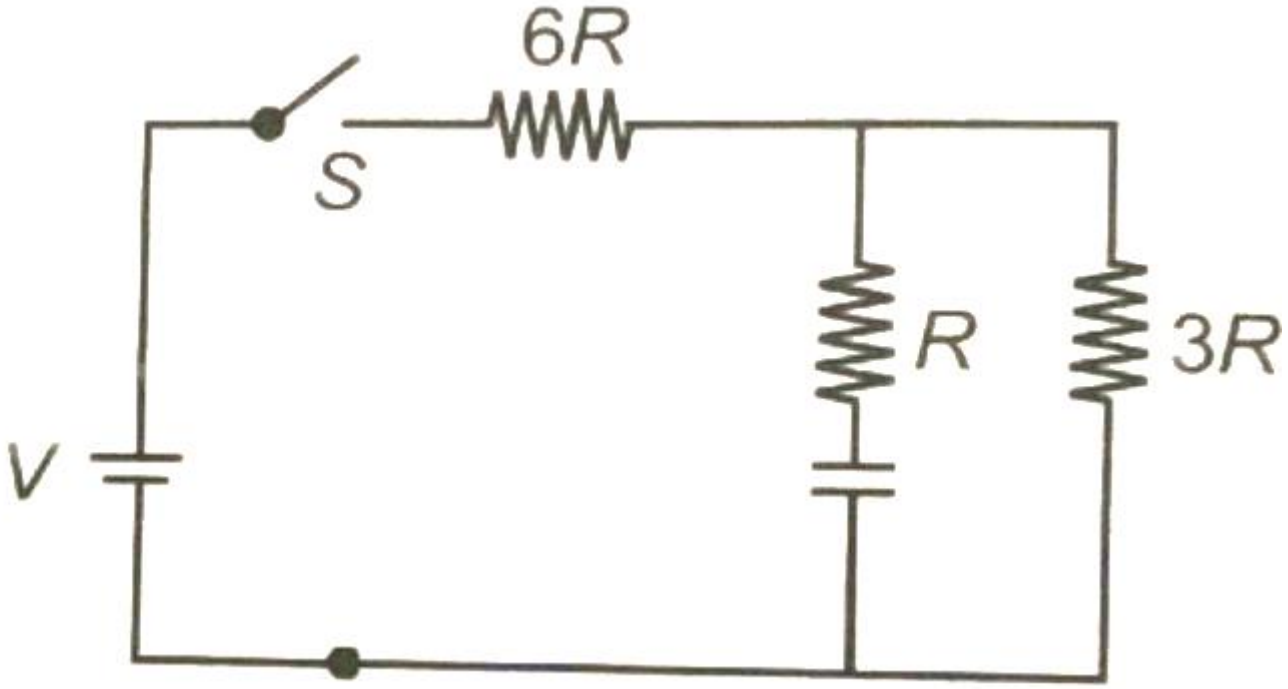

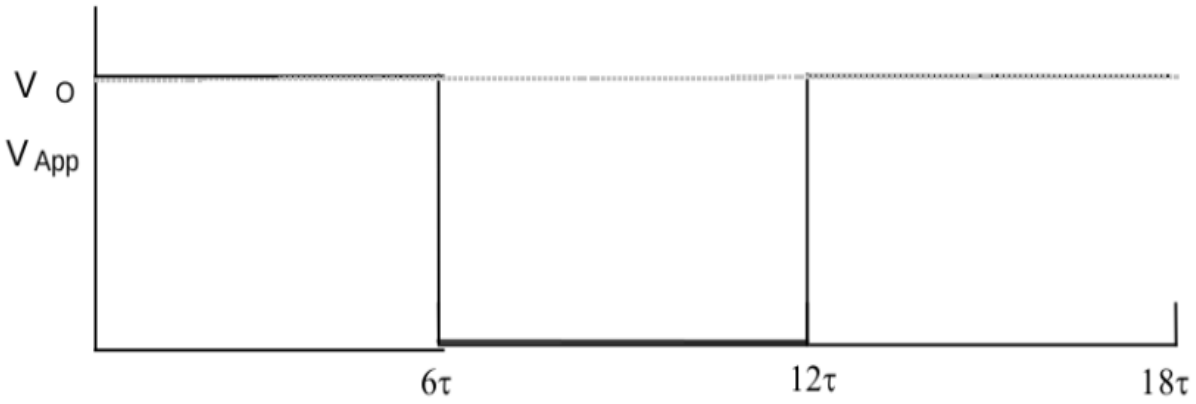

(a) Alternating voltage on and off at the power supply.

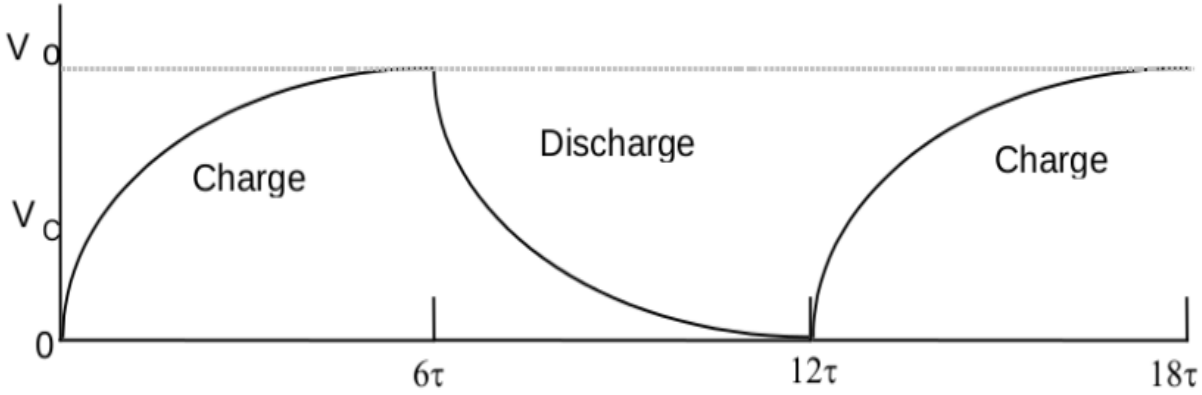

(b) Voltage across the capacitor.

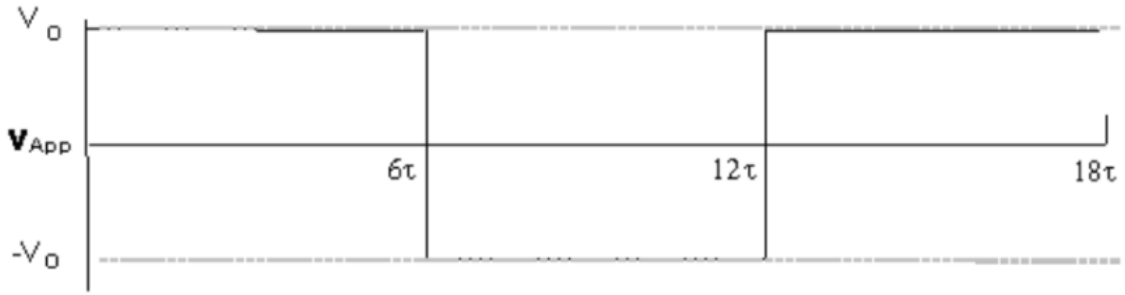

(a) Alternating direction of voltage from signal generator.

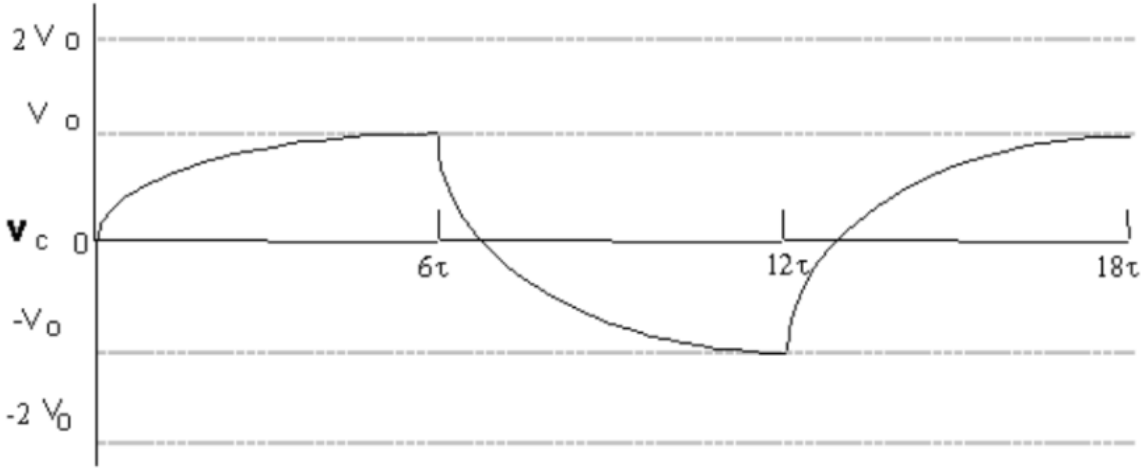

(b) Voltage across the capacitor.

Example of RL/RC parallel circuit

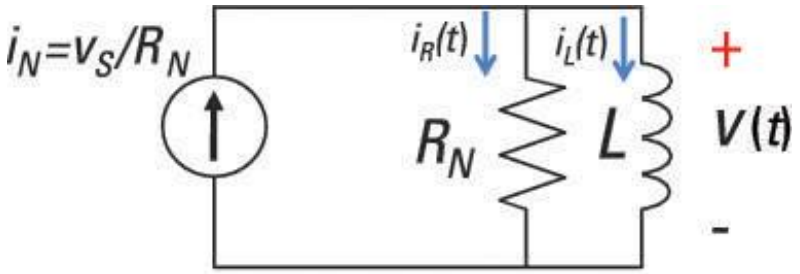

RL-parallel circuit

$$i_R(t) = \frac{v(t)}{R} \qquad v(t) = L\frac{di(t)}{dt}$$

$$i_R(t) = \left(\frac{L}{R}\right)\frac{di(t)}{dt}$$

$$i_N(t) = \left(\frac{L}{R}\right)\frac{di(t)}{dt} + i(t)$$

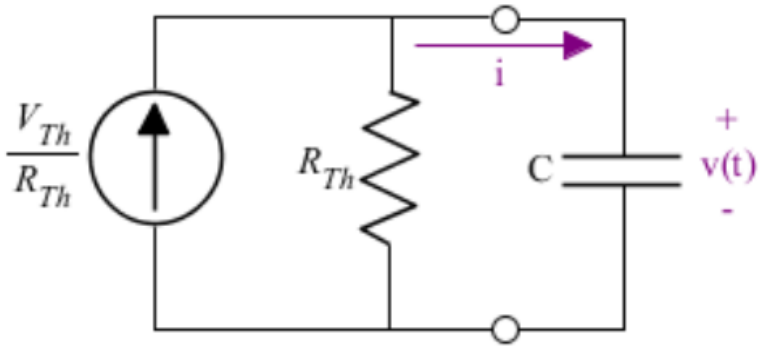

Figure 4: Capacitor with a Norton equivalent circuit

$$i(t) + \frac{v(t)}{R_{Th}} = \frac{V_{Th}}{R_{Th}}$$

$$C \cdot \frac{\mathrm{d}\,v(t)}{\mathrm{d}t} = \frac{V_{Th} - v(t)}{R_{Th}}$$

$$\frac{\mathrm{d}v(t)}{\mathrm{d}t} \cdot \frac{1}{v(t) - V_{Th}}\mathrm{d}t = -\frac{1}{R_{Th} \cdot C}\mathrm{d}t$$

ECE 113- Basic Electronics

Lecture week 8: DC response in RLC circuit, AC response in circuits

Dr. Ram Krishna Ghosh, Assistant Professor

Office: B601, Research and Development Block

Email: rkghosh@iiitd.ac.in

INDRAPRASTHA INSTITUTE *of*
INFORMATION TECHNOLOGY
DELHI

Second order Circuits

$$C\frac{d^2v}{dt^2}+\frac{1}{R}\frac{dv}{dt}+\frac{1}{L}v=0$$

~~Initial condition is 0~~

- Combination of resistive elements and two energy storage elements (capacitor(s) and/or inductor(s))
- ‘Second-order’ refers to the order of the differential equation describing the circuit

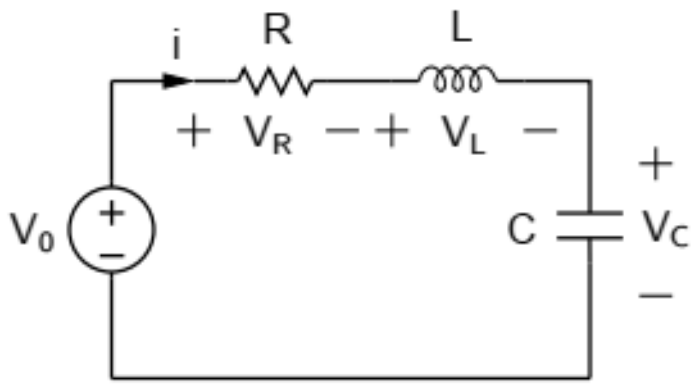

Solution of a Linear Homogeneous 2nd order ordinary differential equation

- General form for second-order, (linear) ordinary differential equation:

$$\frac{d^2x}{dt^2} + a_1\frac{dx}{dt} + a_0x = f(t)$$

✓x(t) is a circuit quantity (voltage, current)

✓a0, a1 are constants, functions of the circuit elements

✓f(t) is a forcing function, usually the source voltage or current

✓For source free case: f(t) = 0

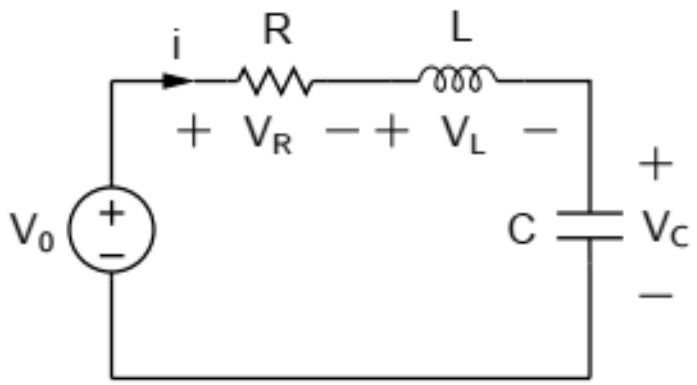

Solution of a Linear Homogeneous 2nd order ordinary differential equation

- This equation is often rewritten:

$$\frac{d^2x}{dt^2} + 2\alpha\frac{dx}{dt} + \omega_n^2 x = f(t)$$

$= 0$

$$\alpha = \frac{a_1}{2}$$

$$\omega_n = \sqrt{a_0}$$

✓ α is called damping factor
✓ ω_n is called the natural frequency
✓ $\omega_d^2 = \omega_n^2 - \alpha^2$ is called the damped frequency

- Characteristic equation:

$$m^2 + 2\alpha m + \omega_n^2 = 0$$

✓ Quadratic roots:

$$m_1, m_2 = \frac{-2\alpha \pm 2\sqrt{\alpha^2 - \omega_n^2}}{2} = -\alpha \pm j\omega_d$$

$x = Ae^{mt}$

$m^2Ae^{mt} + 2\alpha mAe^{mt} + \omega_n^2 Ae^{mt} = 0$

$\Rightarrow (m^2 + 2\alpha m + \omega_n^2) \times Ae^{mt} = 0$

Solution of a Linear Homogeneous 2nd order ordinary differential equation

Solution process:

1. Find the solution to the homogeneous equation
   - The solution is called the natural response (independent of the source applied)
   - Has the form

$$x_n(t) = A_1 e^{m_1 t} + A_2 e^{m_2 t}$$

   - Nature depends on m_1 and m_2

For the homogeneous equation,

$$\frac{d^2y}{dt^2} + a\,\frac{dy}{dt} + b\,y = 0\,,$$

we first find the roots of the associated *characteristic equation*,

$$r^2 + a\,r + b = 0\,.$$

Let the roots be r_1 and r_2. We have the following possibilities:

* r_1, r_2 are real, $r_1 \neq r_2$ ("overdamped")

  $y^{(h)}(t) = C_1\,\exp(r_1 t) + C_2\,\exp(r_2 t)\,.$

* r_1, r_2 are complex, $r_{1,2} = \alpha \pm j\omega$ ("underdamped")

  $y^{(h)}(t) = \exp(\alpha t)\,[C_1 \cos(\omega t) + C_2 \sin(\omega t)]\,.$

* $r_1 = r_2 = \alpha$ ("critically damped")

  $y^{(h)}(t) = \exp(\alpha t)\,[C_1\,t + C_2]\,.$

Check for the solution of 2nd ODE with repeated root at: https://tutorial.math.lamar.edu/classes/de/RepeatedRoots.aspx

Solution of a Linear Homogeneous 2nd order ordinary differential equation

2. Look for a solution to the forced response
3. The complete solution is

$$x(t) = x_n(t) + x_f(t)$$

4. Use initial conditions to determine the constants.

Consider the second-order ODE with constant coefficients,

$$\frac{d^2y}{dt^2} + a\,\frac{dy}{dt} + b\,y = K \text{ (constant)}\,.$$

The general solution $y(t)$ can be written as,

$$y(t) = y^{(h)}(t) + y^{(p)}(t)\,,$$

where $y^{(h)}(t)$ is the solution of the homogeneous equation,

$$\frac{d^2y}{dt^2} + a\,\frac{dy}{dt} + b\,y = 0\,,$$

and $y^{(p)}(t)$ is a particular solution.

Since $K =$ constant, a particular solution is simply $y^{(p)}(t) = K/b$.

In the context of RLC circuits, $y^{(p)}(t)$ is the steady-state value of the variable of interest, i.e.,

$$y^{(p)} = \lim_{t\to\infty} y(t),$$

which can be often found by inspection.

Series RLC circuit

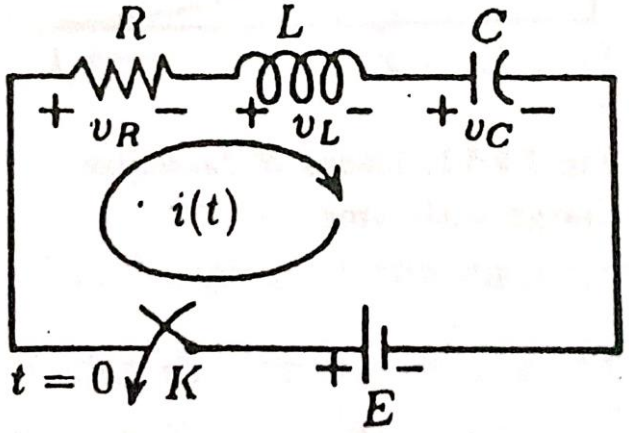

Fig.14.12. A series *RLC* circuit

$v_R = Ri$, $v_L = L\frac{di}{dt}$, and $v_C = q/C$

The KVL equation for the circuit is

$$v_R + v_L + v_C = E \quad \text{or,} \quad Ri + L\frac{di}{dt} + \frac{q}{C} = E$$

Since $i = dq/dt$ and $di/dt = d^2q/dt^2$, Eq. can be written as

$$\frac{d^2q}{dt^2} + 2b\frac{dq}{dt} + \omega_0^2 q = \frac{E}{L}$$

where $2b = R/L$, and $\omega_0^2 = 1/(LC)$

The complete solution of this equation is

$$q = e^{-bt}\left(C_0 e^{n_0 t} + D_0 e^{-n_0 t}\right) + \frac{E}{L\omega_0^2}$$

where C_0 and D_0 are constants and $n_0 = \sqrt{b^2 - \omega_0^2}$.

The second term on the on the right-hand side of the eq. is equal to *EC*, the final steady charge on the capacitor when it is charged by a battery of emf *E*. Taking $EC = q_0$, we can then write as,

$$q = e^{-bt}\left(C_0 e^{n_0 t} + D_0 e^{-n_0 t}\right) + q_0$$

To determine the constants, C_0 and D_0, we note that when $t = 0$, $q = 0$. Therefore, $C_0 + D_0 + q_0 = 0$

Again, at $t = 0$, $i = dq/dt = 0$. So, differentiating w.r.t t and using this condition, we can get

$$n_0(C_0 - D_0) - b(C_0 + D_0) = 0.$$

Solving these Eqs. For C_0 and D_0 gives,

$$C_0 = -\frac{q_0}{2}\left(1 + \frac{b}{n_0}\right) \quad \text{and} \quad D_0 = -\frac{q_0}{2}\left(1 - \frac{b}{n_0}\right)$$

where

$$2b = R/L$$

$$\omega_0^2 = 1/(LC)$$

$$n_0 = \sqrt{b^2 - \omega_0^2}$$

$$q_0 = EC$$

Putting these values of C_0 and D_0 , we get,

$$\boxed{q = -\frac{q_0}{2} e^{-bt}\left[\left(1 + \frac{b}{n_0}\right) e^{n_0 t} + \left(1 - \frac{b}{n_0}\right) e^{-n_0 t}\right] + q_0}$$

There are three cases of interest: $b^2 > \omega_0{}^2$, $b^2 = \omega_0{}^2$, $b^2 < \omega_0{}^2$

Case 1: $b^2 > \omega_0{}^2$

Here, $b^2 > \omega_0{}^2$ means $(R^2/4L^2) > (1/LC)$ and $n_0 = \sqrt{b^2 - \omega_0{}^2}$ is real

The solution of q shows that in this case the capacitor charge increases exponentially and approaches q_0 asymptotically.

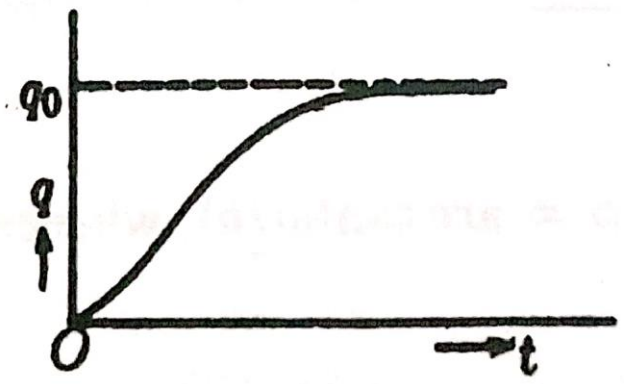

Fig.14.13. Variation of q with t in the overdamped case

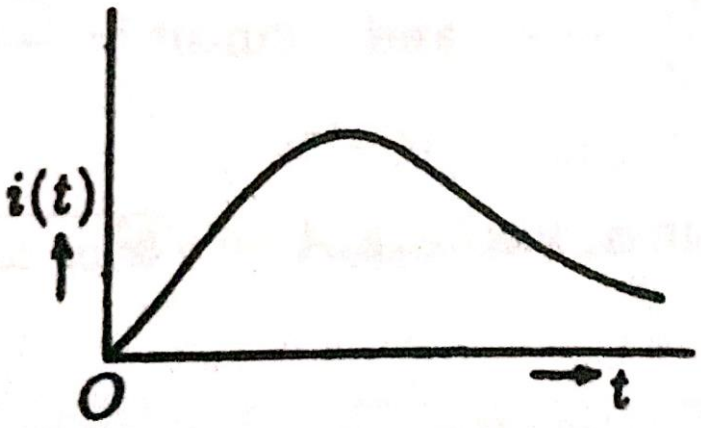

Fig.14.14. Current response for the overdamped case

The Current is given by

$$i(t) = \frac{dq}{dt} = \frac{E}{n_0 L} e^{-bt} \sinh n_0 t,$$

The circuit is said to be overdamped in this case

Case 2: $b^2 = \omega_0{}^2$

Here, $b^2 = \omega_0{}^2$ means $\left(\frac{R^2}{4L^2}\right) = (1/LC)$ and $n_0 = \sqrt{b^2 - \omega_0{}^2} = 0$

In this case, the solution of the KVL differential equation is

$$q = (A_1 + A_2 t)e^{-bt} + \frac{E}{L\omega_0^2}$$

where A_1 and A_2 are constants. With the conditions that at $t = 0$, $q = 0$, and $dq/dt = 0$, we can get

$$A_1 = -\frac{E}{L\omega_0^2} \quad \text{and} \quad A_2 = -\frac{bE}{L\omega_0^2}$$

Therefore, $\boxed{q = q_0\left[1 - (1 + bt)e^{-bt}\right]}$ current, $\boxed{i(t) = \frac{E}{L}te^{-\omega_0 t}}$

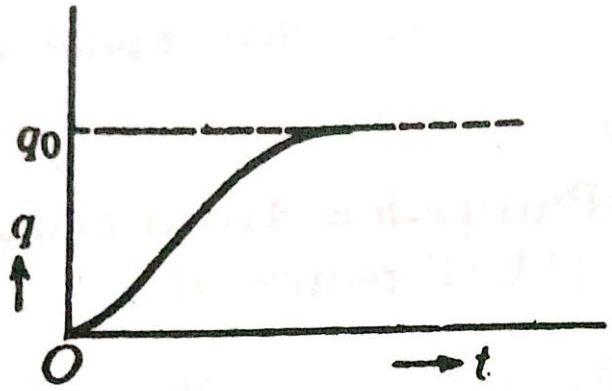

Fig.14.15. Variation of q with t for the critically damped case

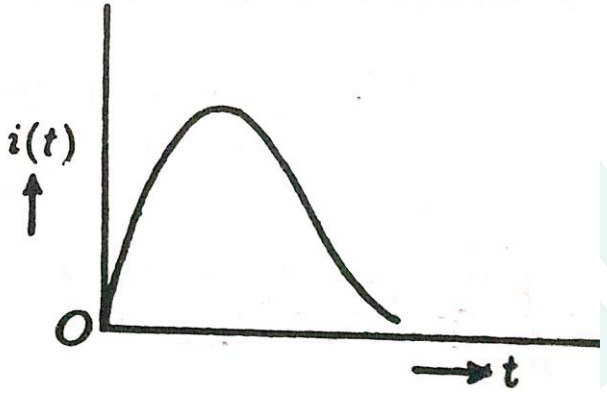

Fig.14.16. Current response for the critically damped case

The circuit is now said to be critically damped

Case 3: $b^2 < \omega_0{}^2$

Here, $b^2 < \omega_0{}^2$ means $\left(\frac{R^2}{4L^2}\right) < (1/LC)$ and $n_0 = \sqrt{b^2 - \omega_0{}^2}$ is imaginary. We can write, $n_0 = j\sqrt{\omega_0{}^2 - b^2} = j\omega$; then we can write the solution of charge q as,

$$q = q_0\left[1 - \frac{e^{-bt}}{\omega}(\omega\cos\omega t + b\sin\omega t)\right]$$

where we have used the relationships $\cos\omega t = \dfrac{e^{j\omega t} + e^{-j\omega t}}{2}$ and $\sin\omega t = \dfrac{e^{j\omega t} + e^{-j\omega t}}{2j}$

Putting $b = A cos\alpha$ and $\omega = A sin\alpha$; we have $A = \sqrt{b^2 + \omega^2}$ and $\alpha = \arctan(\omega/b)$; therefore

$$q = q_0\left[1 - \frac{\sqrt{b^2+\omega^2}}{\omega}e^{-bt}\sin(\omega t + \alpha)\right]$$

$$= q_0\left[1 - \frac{\omega_0 e^{-bt}}{\sqrt{\omega_0^2 - b^2}}\sin\left(\sqrt{\omega_0^2 - b^2}\,t + a\right)\right]$$

The circuit is now said to be underdamped or oscillatory

Contd..

The capacitor charge oscillates about the final value of q_0 (=EC) with decaying amplitude. The angular frequency of the damped sinusoid is $\omega = \sqrt{\omega_0{}^2 - b^2}$.

The rate of decay of the amplitude with time is determined by the term $e^{-bt}(= e^{-R/_{2L}t})$, the associated log decrement being RT/2L, where T is the period of oscillation.

The frequency of oscillation of the capacitor charge is

$$f = \frac{1}{T} = \frac{\omega}{2\pi} = \frac{\sqrt{\omega_0^2 - b^2}}{2\pi} = \frac{1}{2\pi}\sqrt{\frac{1}{LC} - \frac{R^2}{4L^2}}$$

The current in the circuit is given by,

$$i = \frac{dq}{dt} = \frac{q_0\omega_0^2}{\sqrt{\omega_0^2 - b^2}} e^{-bt} \sin \sqrt{\omega_0^2 - b^2}\, t$$

The current is oscillatory with the same frequency as the charge oscillates

Contd..

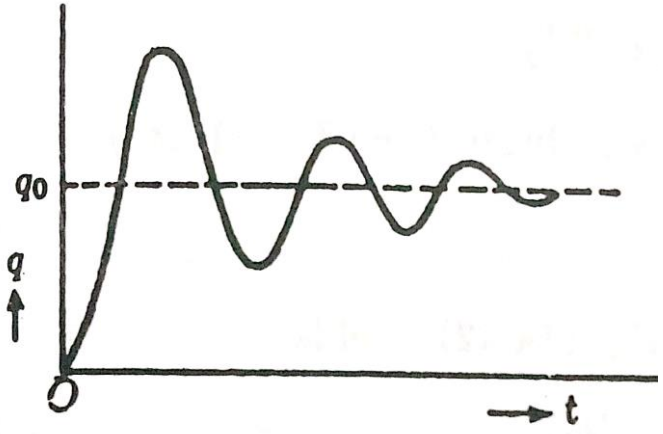

Fig.14.17. Variation of q with t for the underdamped case

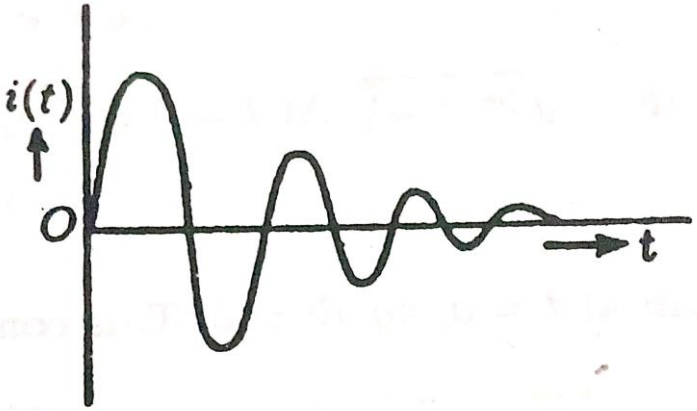

Fig.14.18. Current response for the underdamped case

The critical damping considered in case 2 is basically the transition from non-oscillatory behaviour considered in case 1 to the oscillatory behaviour as discussed here.

When R = 0 (which may happen at very low temperatures where the materials become superconducting), then b = 0 and $\omega=\omega_0$, so the charge and current (in this case 3) reduces to

$$q = q_0(1 - \cos\omega_0 t)$$

$$\text{and} \quad i = q_0\omega_0 \sin\omega_0 t.$$

The charge and current oscillations are now undamped or sustained with the angular frequency $\omega_0=1/\sqrt{LC}$. Therefore, ω_0 is called undamped natural frequency of the circuit. The charge q oscillates about q_0 with an amplitude q_0, so that the maximum and the minimum values of q are $2q_0$ and 0, respectively.

The oscillatory and non-oscillatory variation of current in series RLC has important application in radio-communication systems.

Discharging of the capacitor

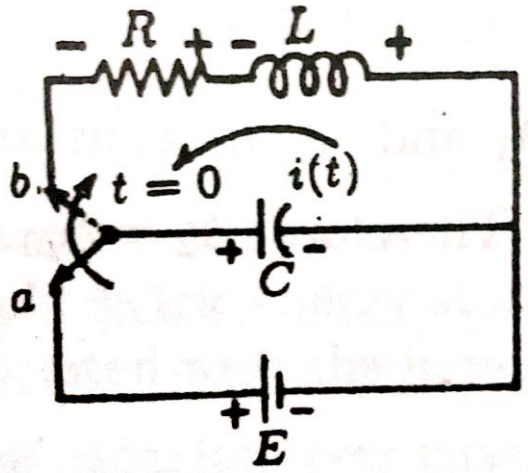

Fig.14.19. Discharging of a capacitor in a series RLC circuit

$$Ri + L\frac{di}{dt} + \frac{q}{C} = 0$$

$$\frac{d^2q}{dt^2} + 2b\frac{dq}{dt} + \omega_0^2 q = 0$$

where $2b = R/L$ and $\omega_0^2 = 1/\sqrt{LC}$

The solution of the differential equation is

$$q = e^{-bt}\left(C_0 e^{n_0 t} + D_0 e^{-n_0 t}\right)$$

where $n_0 = \sqrt{b^2 - \omega_0^2}$

At $t = 0, q = q_0 = EC$, so that we obtain

$$C_0 + D_0 = q_0.$$

Again at $t = 0$, $dq/dt = 0$. This condition, yields

$$n_0(C_0 - D_0) = b(C_0 + D_0)$$

Contd..

Solving for C_0 and D_0 we obtain

$$C_0 = \frac{q_0}{2}\left(1 + \frac{b}{n_0}\right) \quad \text{and} \quad D_0 = \frac{q_0}{2}\left(1 - \frac{b}{n_0}\right)$$

Substituting these values , we have

$$\boxed{q = \frac{q_0}{2} e^{-bt}\left[\left(1 + \frac{b}{n_0}\right) e^{n_0 t} + \left(1 - \frac{b}{n_0}\right)^{-n_0 t}\right]}$$

where $n_0 = \sqrt{b^2 - \omega_0^2}$

$2b = R/L$ and $\omega_0^2 = 1/\sqrt{LC}$

Again, there are three cases of interest: $b^2 > \omega_0{}^2$, $b^2 = \omega_0{}^2$, $b^2 < \omega_0{}^2$

over damped | critically damped | under damped

Case 1: $b^2 > \omega_0{}^2$

Here, $b^2 > \omega_0{}^2$ means $(R^2/4L^2) > (1/LC)$ and $n_0 = \sqrt{b^2 - \omega_0{}^2}$ is real and the capacitor charge will die out with time. This is overdamped case.

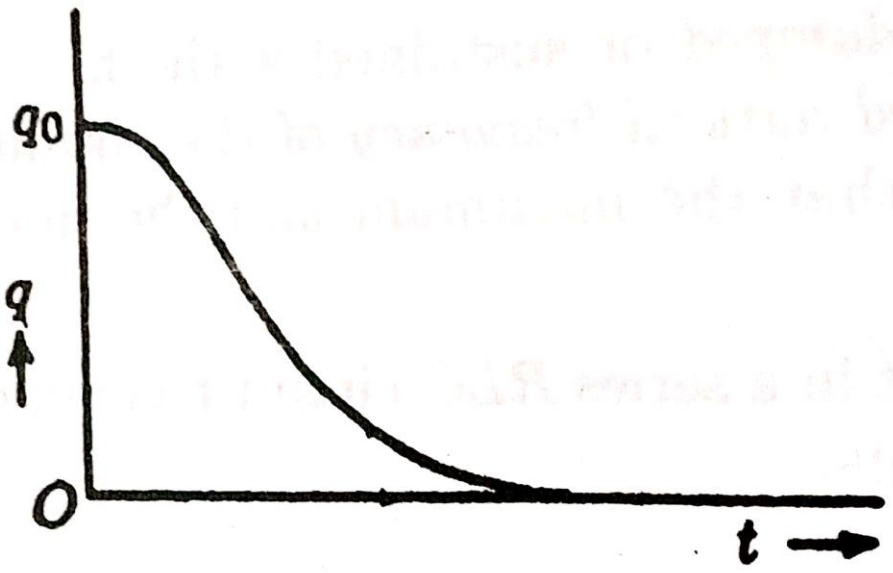

Fig.14.20. Capacitor discharge in the overdamped case

Case 2: $b^2 = \omega_0{}^2$

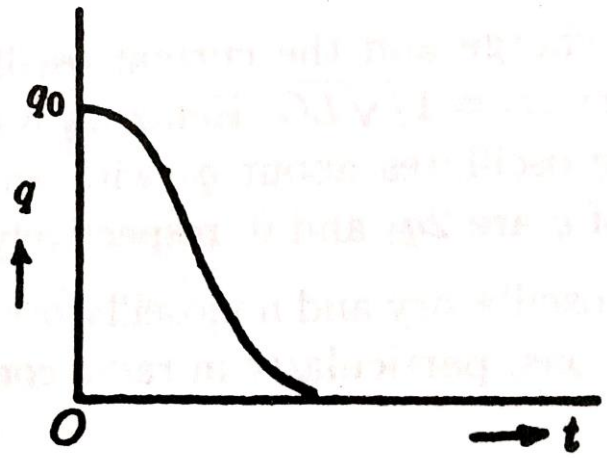

Fig.14.21. Capacitor discharge in the critically damped case

Here, $b^2 = \omega_0{}^2$ means $\left(\frac{R^2}{4L^2}\right) = (1/LC)$ and $n_0 = \sqrt{b^2 - \omega_0{}^2} = 0$

In this case, the solution of the differential equation is

$$q = (A_1 + A_2 t)e^{-bt}$$

where A_1 and A_2 are constants.

At $t = 0$, $q = 0$, so, $A_1 = q_0$

Again, at $t = 0$, $i = dq/dt = 0$, therefore, $A_2 = bq_0$

Therefore,

$$q = q_0(1 + bt)e^{-bt}$$

This is critically damped case. The resistance in this case is $R = 2\sqrt{L/C}$ which is known as critical damping resistance.

The current is $i = \frac{dq}{dt} = -q_0 b^2 t e^{-bt}$

The critically damped current has its maximum value at time t_0 which can be obtained by $di/dt = 0$. Therefore, $t_0 = 1/b = 2L/R$

Check for the solution of 2nd ODE with repeated root at: https://tutorial.math.lamar.edu/classes/de/RepeatedRoots.aspx

Case 3: $b^2 < \omega_0{}^2$

Here, $b^2 < \omega_0{}^2$ means $\left(\frac{R^2}{4L^2}\right) < (1/LC)$ and $n_0 = \sqrt{b^2 - \omega_0{}^2}$ is imaginary. We can write, $n_0 = j\sqrt{\omega_0{}^2 - b^2} = j\omega$; then we can write the solution of charge q as,

$$q = \frac{q_0}{\omega} e^{-bt} (\omega \cos \omega t + b \sin \omega t)$$

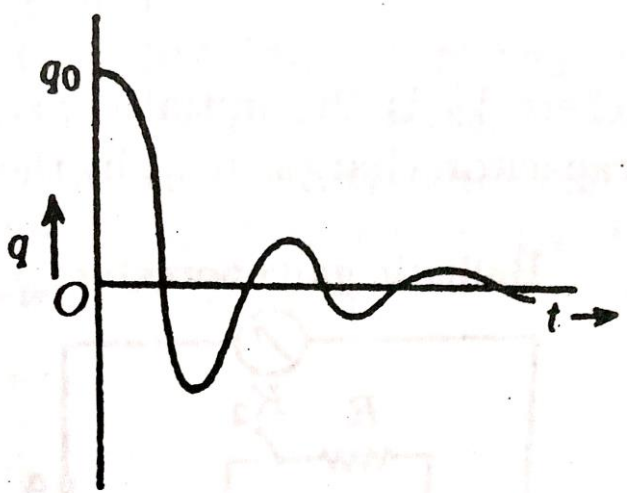

Fig.14.22. Oscillatory discharge of the capacitor

Similar to earlier case (i.e. in case of charging), we can also write in the following form

$$q = \frac{q_0 \omega_0}{\omega} e^{-bt} \sin(\omega t + \alpha) \quad \text{where}$$

$$\alpha = \arctan(\omega/b)$$

The instantaneous current *i(t)* is given by $i = \frac{dq}{dt} = -\frac{q_0}{\omega} \omega_0^2 e^{-bt} \sin \omega t$

Both the current and charge oscillate with decreasing amplitude with time with angular frequency ω. The rate of diminution of amplitude is governed by the term e^{-bt} and the corresponding log decrement is RT/2L.

Undamped charge and current

If $R = 0$, then the charge and current expression reduces to

$$q = q_0 \cos \omega_0 t,$$

$$\text{and} \quad i = -q_0 \omega_0 \sin \omega_0 t$$

the charge and current oscillations are now undamped with angular frequency $\omega_0 = 1/\sqrt{LC}$

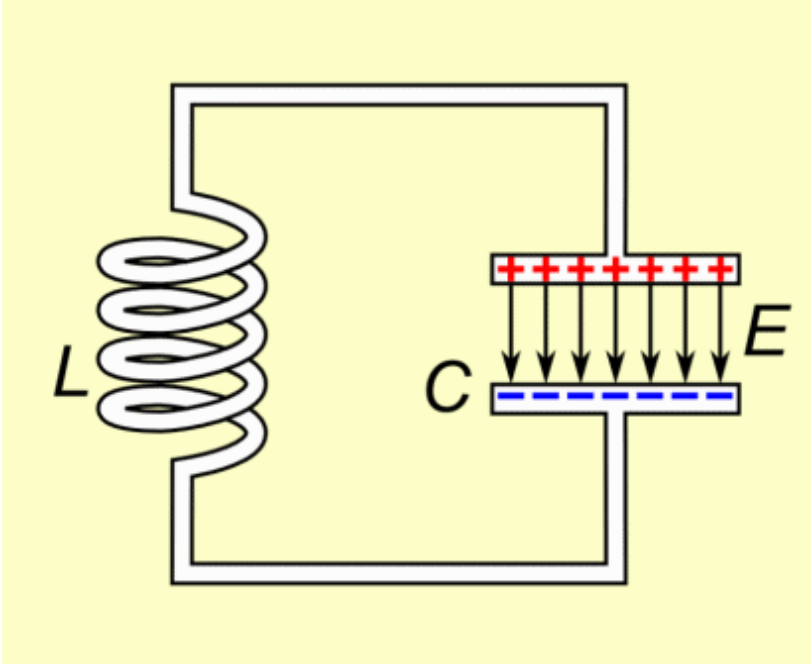

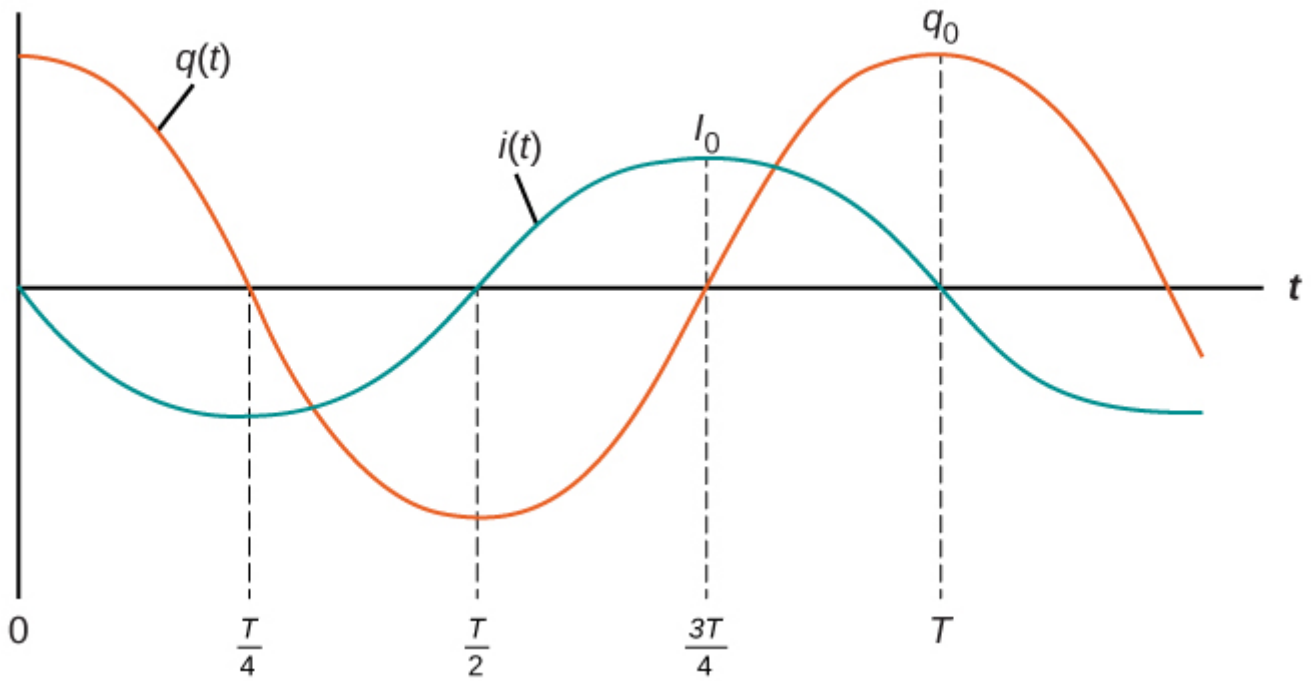

LC circuit natural response

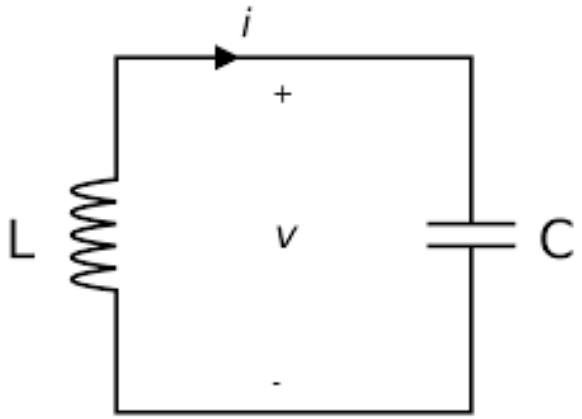

By Kirchhoff's voltage law,

$$V_C + V_L = 0.$$

Likewise, by Kirchhoff's current law,

$$I_C = I_L.$$

$$V_L(t) = L\frac{\mathrm{d}I_L}{\mathrm{d}t},$$

$$I_C(t) = C\frac{\mathrm{d}V_C}{\mathrm{d}t}.$$

the second order differential equation

$$\frac{\mathrm{d}^2}{\mathrm{d}t^2}I(t) + \frac{1}{LC}I(t) = 0$$

$$\frac{\mathrm{d}^2}{\mathrm{d}t^2}I(t) + \omega_0^2 I(t) = 0.$$

The parameter ω_0,

$$\omega_0 = \frac{1}{\sqrt{LC}}$$

Solution

$$I(t) = Ae^{+j\omega_0 t} + Be^{-j\omega_0 t}$$

Homework: Do the analysis DC transient response of forced LC circuit (both series and parallel) and check the behavior

Another approach of series RLC circuit: using current

Step response

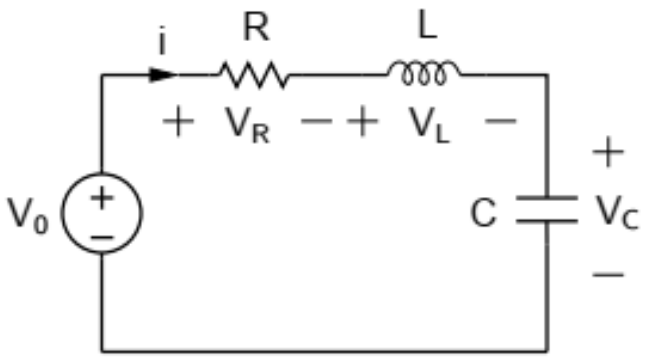

KVL: $V_R + V_L + V_C = V_0 \Rightarrow i\,R + L\dfrac{di}{dt} + \dfrac{1}{C}\displaystyle\int i\,dt = V_0$

Differentiating w. r. t. t, we get,

$$R\frac{di}{dt} + L\frac{d^2 i}{dt^2} + \frac{1}{C}\,i = 0.$$

i.e., $\dfrac{d^2 i}{dt^2} + \dfrac{R}{L}\dfrac{di}{dt} + \dfrac{1}{LC}\,i = 0\,,$

a second-order ODE with constant coefficients.

Source free response

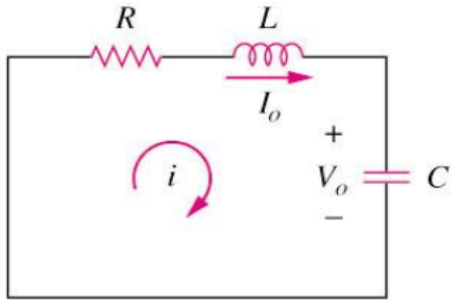

- The solution of the source-free series RLC circuit is called as the natural response of the circuit.
- The circuit is excited by the energy initially stored in the capacitor and inductor.

The 2nd order of expression

$$\frac{d^2 i}{dt^2} + \frac{R}{L}\frac{di}{dt} + \frac{i}{LC} = 0$$

Both are homogeneous 2nd order ODE equations

Another approach of series RLC circuit: using voltage

The step response is obtained by the sudden application of a dc source.

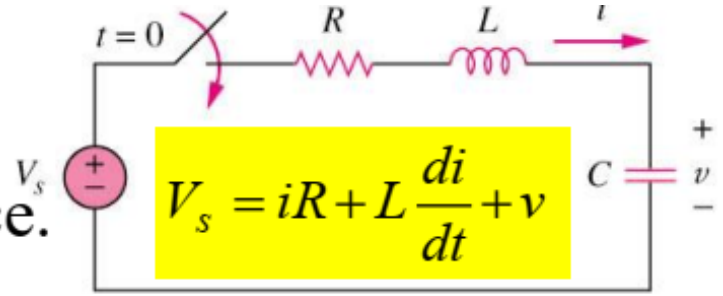

$$V_s = iR + L\frac{di}{dt} + v$$

$$i = C\frac{dv}{dt}$$

$$V_s = RC\frac{dv}{dt} + LC\frac{d^2v}{dt^2} + v$$

The 2nd order of expression

$$\frac{d^2v}{dt^2} + \frac{R}{L}\frac{dv}{dt} + \frac{v}{LC} = \frac{V_s}{LC}$$

This is inhomogeneous 2nd order ODE equations

Another approach of parallel RLC circuit: using voltage

Step response

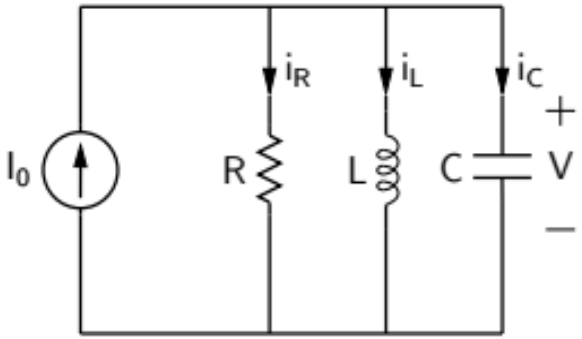

KCL: $i_R + i_L + i_C = I_0 \Rightarrow \frac{1}{R}V + \frac{1}{L}\int V\,dt + C\frac{dV}{dt} = I_0$

Differentiating w. r. t. t, we get,

$$\frac{1}{R}\frac{dV}{dt} + \frac{1}{L}V + C\frac{d^2V}{dt^2} = 0.$$

i.e., $\frac{d^2V}{dt^2} + \frac{1}{RC}\frac{dV}{dt} + \frac{1}{LC}V = 0$,

a second-order ODE with constant coefficients.

Source free response

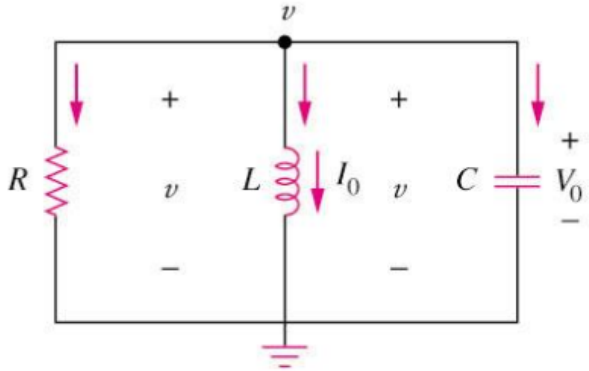

Let $i(0) = I_0 = \frac{1}{L}\int_{-\infty}^{0} v(t)dt$

$v(0) = V_0$, Apply KCL to the top node:

$$\frac{v}{R} + \frac{1}{L}\int_{-\infty}^{t} v\,dt + C\frac{dv}{dt} = 0$$

Taking the derivative with respect to t and dividing by C

The 2nd order of expression

$$\frac{d^2v}{dt^2} + \frac{1}{RC}\frac{dv}{dt} + \frac{1}{LC}v = 0$$

Both are homogeneous 2nd order ODE equations

Another approach of parallel RLC circuit: using current

The step response is obtained by the sudden application of a dc source.

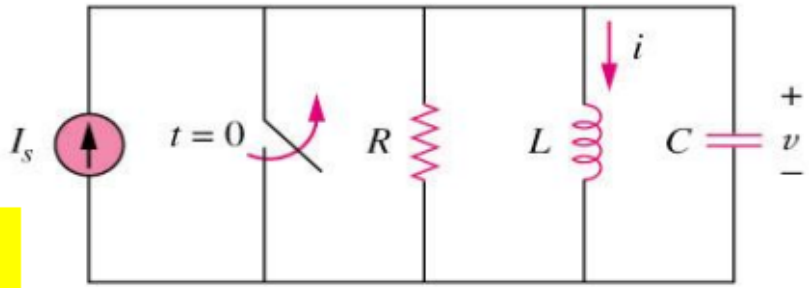

$$C\frac{dv}{dt}+\frac{v}{R}+i=I_s$$

$$v=L\frac{di}{dt}$$

$$LC\frac{d^2i}{dt^2}+\frac{L}{R}\frac{di}{dt}+i=I_s$$

The 2nd order of expression

$$\frac{d^2i}{dt^2}+\frac{1}{RC}\frac{di}{dt}+\frac{i}{LC}=\frac{I_s}{LC}$$

This is inhomogeneous 2nd order ODE equations

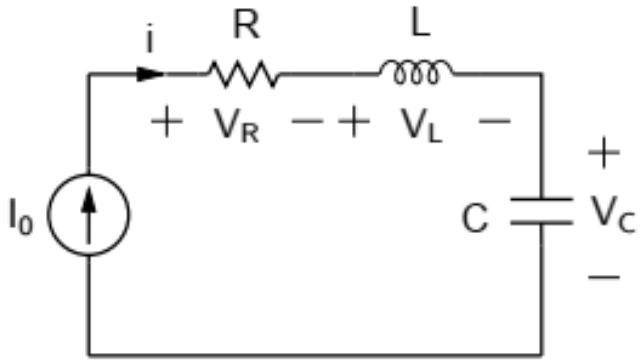

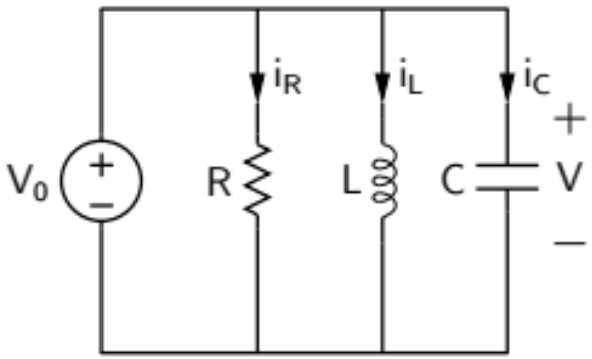

* A series RLC circuit driven by a constant current source is trivial to analyze. Since the current through each element is known, the voltage can be found in a straightforward manner.

$$V_R = i\,R,\;\; V_L = L\,\frac{di}{dt},\;\; V_C = \frac{1}{C}\int i\,dt\,.$$

* A parallel RLC circuit driven by a constant voltage source is trivial to analyze. Since the voltage across each element is known, the current can be found in a straightforward manner.

$$i_R = V/R,\;\; i_C = C\,\frac{dV}{dt},\;\; i_L = \frac{1}{L}\int V\,dt\,.$$

* The above equations hold even if the applied voltage or current is not constant, and the variables of interest can still be easily obtained without solving a differential equation.

A general RLC circuit

A general *RLC* circuit (with one inductor and one capacitor) also leads to a second-order ODE. As an example, consider the following circuit:

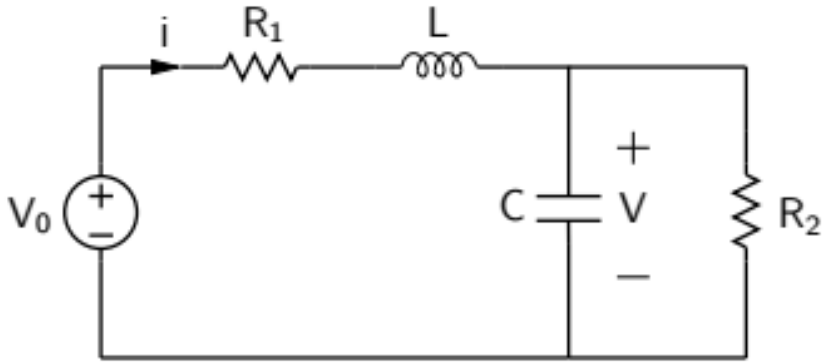

$$V_0 = R_1\, i + L\,\frac{di}{dt} + V \tag{1}$$

$$i = C\,\frac{dV}{dt} + \frac{1}{R_2}\,V \tag{2}$$

Substituting (2) in (1), we get

$$V_0 = R_1\left[CV' + V/R_2\right] + L\left[CV'' + V'/R_2\right] + V\,, \tag{3}$$

$$V''\,[LC] + V'\,[R_1 C + L/R_2] + V\,[1 + R_1/R_2] = V_0\,. \tag{4}$$

General method to solve 2nd order ODE

Consider the second-order ODE with constant coefficients,

$$\frac{d^2y}{dt^2} + a\,\frac{dy}{dt} + b\,y = K \text{ (constant)}\,.$$

The general solution $y(t)$ can be written as,

$$y(t) = y^{(h)}(t) + y^{(p)}(t)\,,$$

where $y^{(h)}(t)$ is the solution of the homogeneous equation,

$$\frac{d^2y}{dt^2} + a\,\frac{dy}{dt} + b\,y = 0\,,$$

and $y^{(p)}(t)$ is a particular solution.

Since $K =$ constant, a particular solution is simply $y^{(p)}(t) = K/b$.

In the context of RLC circuits, $y^{(p)}(t)$ is the steady-state value of the variable of interest, i.e.,

$$y^{(p)} = \lim_{t\to\infty} y(t),$$

which can be often found by inspection.

Contd..

For the homogeneous equation,

$$\frac{d^2y}{dt^2} + a\,\frac{dy}{dt} + b\,y = 0\,,$$

we first find the roots of the associated *characteristic equation*,

$$r^2 + a\,r + b = 0\,.$$

Let the roots be r_1 and r_2. We have the following possibilities:

* r_1, r_2 are real, $r_1 \neq r_2$ ("overdamped")
  $y^{(h)}(t) = C_1\,\exp(r_1 t) + C_2\,\exp(r_2 t)\,.$
* r_1, r_2 are complex, $r_{1,2} = \alpha \pm j\omega$ ("underdamped")
  $y^{(h)}(t) = \exp(\alpha t)\,[C_1 \cos(\omega t) + C_2 \sin(\omega t)]\,.$
* $r_1 = r_2 = \alpha$ ("critically damped")
  $y^{(h)}(t) = \exp(\alpha t)\,[C_1\,t + C_2]\,.$

TABLE Summary of Relevant Equations for Source-Free *RLC* Circuits

Type	Condition	Criteria	α	ω_0	Response
Parallel Series	Overdamped	$\alpha > \omega_0$	$\frac{1}{2RC}$ $\frac{R}{2L}$	$\frac{1}{\sqrt{LC}}$	$A_1 e^{s_1 t} + A_2 e^{s_2 t}$, where $s_{1,2} = -\alpha \pm \sqrt{\alpha^2 - \omega^2}$
Parallel Series	Critically damped	$\alpha = \omega_0$	$\frac{1}{2RC}$ $\frac{R}{2L}$	$\frac{1}{\sqrt{LC}}$	$e^{-\alpha t}(A_1 t + A_2)$
Parallel Series	Underdamped	$\alpha < \omega_0$	$\frac{1}{2RC}$ $\frac{R}{2L}$	$\frac{1}{\sqrt{LC}}$	$e^{-\alpha t}(B_1 \cos \omega_d t + B_2 \sin \omega_d t)$, where $\omega_d = \sqrt{\omega_0^2 - \alpha^2}$

Examples 1

1. Determine the complete response of the circuit of Figure 23. Given R = 5 k; C = 1 μF; L = 1 H; Vs = 25 V.

Ans:

Assumptions: The capacitor has been charged (through a separate circuit, not shown) prior to the switch closing, such that $v_C(0) = 5$ V.

Analysis:

1. Apply KVL to determine the circuit differential equation:

$$V_S - v_C(t) - v_R(t) - v_L(t) = 0$$

$$V_S - \frac{1}{C}\int_{-\infty}^{t} i\,dt - iR - L\frac{di}{dt} = 0$$

$$\frac{d^2i}{dt^2} + \frac{R}{L}\frac{di}{dt} + \frac{1}{LC}i = \frac{1}{L}\frac{dV_S}{dt} = 0 \qquad t > 0$$

We note that the above equations that we have chosen the series (inductor) current as the variable in the differential equation; we also observe that the DC forcing function is zero, because the capacitor acts as an open circuit in the steady state, and the current will therefore be zero as $t \to \infty$.

2. We determine the characteristic polynomial by substituting s for d/dt:

$$s^2 + \frac{R}{L}s + \frac{1}{LC} = 0$$

$$s_{1,2} = -\frac{L}{2R} \pm \frac{1}{2}\sqrt{\left(\frac{R}{L}\right)^2 - \frac{4}{LC}}$$

$$= -2{,}500 \pm \sqrt{(5{,}000^2 - 4 \times 10^6}$$

$$s_1 = -208.7; \quad s_2 = -4{,}791.3$$

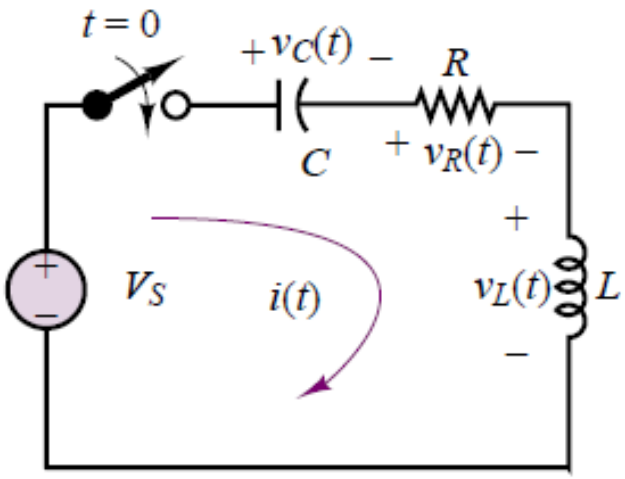

Figure 23

Contd..

These are real, distinct roots, therefore we have an overdamped circuit with natural response given by

$$i_N(t) = K_1 e^{-208.7t} + K_2 e^{-4,791.3t}$$

3. The forced response is zero, as stated earlier, because of the behavior of the capacitor as $t \to \infty$: $F = 0$.
4. The complete solution is therefore equal to the natural response:

$$i(t) = i_N(t) = K_1 e^{-208.7t} + K_2 e^{-4,791.3t}$$

5. The initial conditions for the energy storage elements are $v_C(0^+) = 5$ V; $i_L(0^+) = 0$ A.
6. To evaluate the coefficients K_1 and K_2, we consider the initial conditions $i_L(0^+)$ and $di_L(0^+)/dt$. The first of these is given by $i_L(0^+) = 0$, as stated above. Thus,

$$i(0^+) = 0 = K_1 e^0 + K_2 e^0$$

$$K_1 + K_2 = 0$$

$$K_1 = -K_2$$

To use the second initial condition, we observe that

$$\frac{di}{dt}(0^+) = \frac{di_L}{dt}(0^+) = \frac{1}{L} v_L(0^+)$$

Contd..

and we note that the inductor voltage *can* change instantaneously; i.e., $v_L(0^-) \neq v_L(0^+)$. To determine $v_L(0^+)$ we need to apply KVL once again at $t = 0^+$:

$$V_S - v_C(0^+) - v_R(0^+) - v_L(0^+) = 0$$

$$v_R(0^+) = i(0^+)R = 0$$

$$v_C(0^+) = 5$$

Therefore

$$v_L(0^+) = V_S - v_C(0^+) - v_R(0^+) = 25 - 5 - 0 = 20 \text{ V}$$

and we conclude that

$$\frac{di}{dt}(0^+) = \frac{1}{L} v_L(0^+) = 20$$

Now we can obtain a second equation in K_1 and K_2,

$$\frac{di}{dt}(0^+) = 20 = -208.7K_1e^0 - 4.791.3K_2e^0$$

and since

$$K_1 = -K_2$$

$$20 = 208.7K_2 - 4.791.3K_2$$

$$K_1 = 4.36 \times 10^3$$

$$K_2 = -4.36 \times 10^{-3}$$

Contd..

Finally, the complete solution is:

$$i(t) = 4.36 \times 10^{-3} e^{-208.7t} - 4.36 \times 10^{-3} e^{-4,791.3t} \text{ A}$$

To compute the desired quantity, that is, $v_C(t)$, we can now simply integrate the result above, remembering that the capacitor initial voltage was equal to 5 V:

$$v_C(t) = \frac{1}{C}\int_0^t i(t)dt + v_C(0)$$

$$\begin{aligned}
\frac{1}{C}\int_0^t i(t)dt &= 10^6\left(\int_0^t \left(4.36 \times 10^{-3} e^{-208.7t} - 4.36 \times 10^{-3} e^{-4,791.3t}\right) dt\right) \\
&= \frac{10^6 \times 4.36 \times 10^{-3}}{(-208.7)}\left[e^{-208.7t} - 1\right] \\
&\quad - \frac{10^6 \times 4.36 \times 10^{-3}}{(-4,791.3)}\left[e^{-4,791.3t} - 1\right] \\
&= -20.9e^{-208.7t} + 20.9 + 0.9e^{-4,791.3t} - 0.9 \qquad t > 0 \\
&= 20 - 20.9e^{-208.7t} + 0.9e^{-4,791.3t}
\end{aligned}$$

$$v_C(t) = 25 - 20.9e^{-208.7t} + 0.9e^{-4,791.3t} \text{ V}$$

Contd..

- The capacitor voltage is plotted in Figure 24.

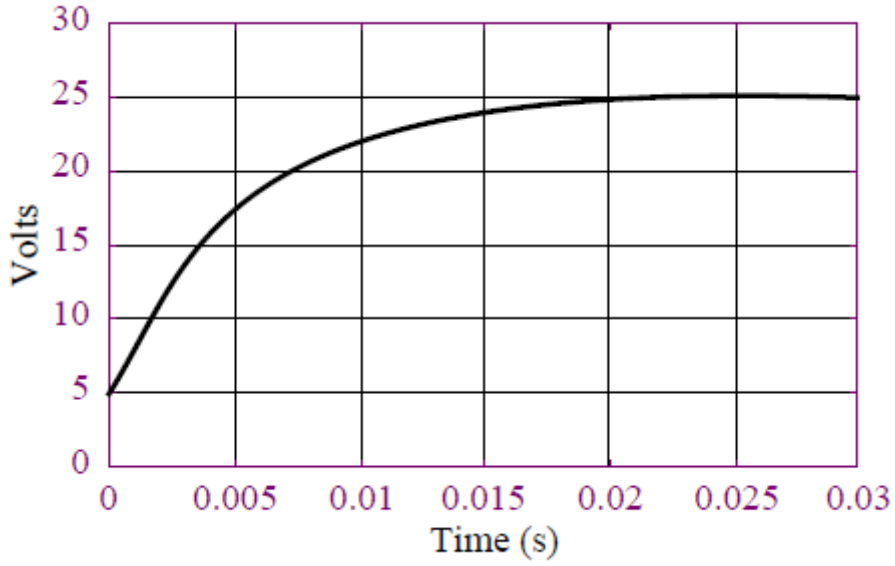

Figure 24

Contd..

2. We determine the characteristic polynomial by substituting s for d/dt:

$$s^2 + \frac{1}{RC}s + \frac{1}{LC} = 0$$

$$s_{1,2} = -\frac{1}{2RC} \pm \frac{1}{2}\sqrt{\left(\frac{1}{RC}\right)^2 - \frac{4}{LC}}$$

$$= -500 \pm \frac{1}{2}\sqrt{(1,000)^2 - 10^6}$$

$$s_1 = -500 \qquad s_2 = -500$$

These are real, repeated roots, therefore we have a critically damped circuit with natural response given by equation 5.64:

$$v_N(t) = K_1 e^{-500t} + K_2 t e^{-500t}$$

3. The forced response is zero, as stated earlier, because of the behavior of the inductor as $t \to \infty$: $F = 0$.

4. The complete solution is therefore equal to the natural response:

$$v(t) = v_N(t) = K_1 e^{-500t} + K_2 t e^{-500t}$$

Contd..

5. The initial conditions for the energy storage elements are: $v_C(0^+) = 0$ V; $i_L(0^+) = 0$ A.
6. To evaluate the coefficients K_1 and K_2, we consider the initial conditions $v_C(0^+)$ and $dv_C(0^+)/dt$. The first of these is given by $v_C(0^+) = 0$, as stated above. Thus,

$$v(0^+) = 0 = K_1 e^0 + K_2 \times 0e^0$$

$$K_1 = 0$$

To use the second initial condition, we observe that

$$\frac{dv}{dt}(0^+) = \frac{dv_C(0^+)}{dt} = \frac{1}{C} i_C(0^+)$$

and we note that the capacitor current *can* change instantaneously; i.e., $i_C(0^-) \neq i_C(0^+)$. To determine $i_C(0^+)$ we need to apply KCL once again at $t = 0^+$:

$$I_S - i_L(0^+) - i_R(0^+) - i_C(0^+) = 0$$

$$i_L(0^+) = 0; \quad i_R(0^+) = \frac{v(0^+)}{R} = 0;$$

Therefore

$$i_C(0^+) = I_S - 0 - 0 - 0 = 5 \text{ A}$$

Contd..

and we conclude that

$$\frac{dv}{dt}(0^+) = \frac{1}{C} i_C(0^+) = 5$$

Now we can obtain a second equation in K_1 and K_2,

$$i_C(t) = C\frac{dv}{dt} = C\left[K_1(-500)e^{-500t} + K_2 e^{-500t} + K_2(-500)te^{-500t}\right]$$

$$i_C(0^+) = C\left[K_1(-500)e^0 + K_2 e^0 + K_2(-500)(0)e^0\right]$$

$$5 = C\left[K_1(-500) + K_2\right]$$

$$K_2 = \frac{5}{C} = 2.5 \times 10^6$$

Finally, the complete solution is:

$$v(t) = 2.5 \times 10^6 te^{-500t} \text{ V}$$

Contd..

A plot of the voltage response of this critically damped circuit is shown in Figure 25.

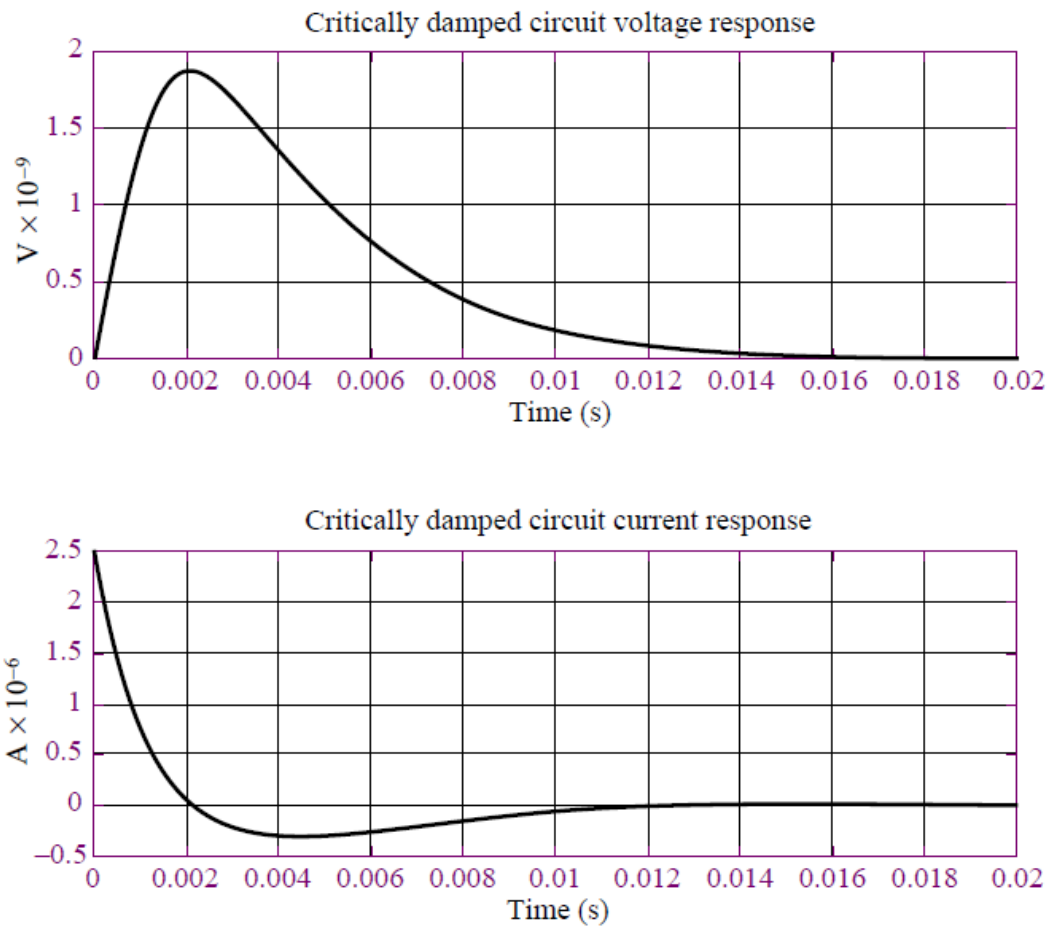

Figure 25

Examples 2

2. Determine the complete response of *v(t)* in the circuit of Figure 24. Given I_S= 5 A; *R* = 500 ; *C* = 2 μF; *L* = 2 H. Ans:

Assumptions: The capacitor voltage and inductor current are equal to zero at $t = 0^+$.

Analysis:

1. Apply KCL to determine the circuit differential equation:

$$I_S - i_L(t) - i_R(t) - i_C(t) = 0$$

$$I_S - \frac{1}{L}\int_{-\infty}^{t} v(t)dt - \frac{v(t)}{R} - C\frac{dv(t)}{dt} = 0$$

$$\frac{d^2v}{dt^2} + \frac{1}{RC}\frac{dv}{dt} + \frac{1}{LC}v = \frac{1}{C}\frac{dI_S}{dt} = 0 \qquad t > 0$$

We note that the DC forcing function is zero, because the inductor acts as a short circuit in the steady state, and the voltage across the inductor (and therefore across the parallel circuit) will be zero as $t \to \infty$.

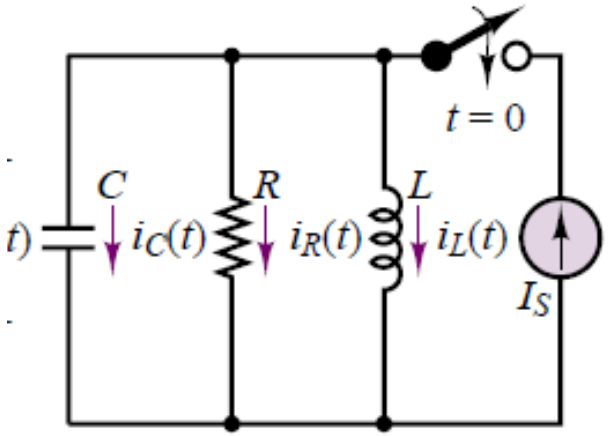

$L = 2$ H $\quad C = 2$ µF

$R = 500\ \Omega \quad I_S = 5$ A

Figure 24

Contd..

2. We determine the characteristic polynomial by substituting s for d/dt:

$$s^2 + \frac{1}{RC}s + \frac{1}{LC} = 0$$

$$s_{1,2} = -\frac{1}{2RC} \pm \frac{1}{2}\sqrt{\left(\frac{1}{RC}\right)^2 - \frac{4}{LC}}$$

$$= -500 \pm \frac{1}{2}\sqrt{(1,000)^2 - 10^6}$$

$$s_1 = -500 \qquad s_2 = -500$$

These are real, repeated roots, therefore we have a critically damped circuit with natural response given by equation 5.64:

$$v_N(t) = K_1 e^{-500t} + K_2 t e^{-500t}$$

3. The forced response is zero, as stated earlier, because of the behavior of the inductor as $t \to \infty$: $F = 0$.

4. The complete solution is therefore equal to the natural response:

$$v(t) = v_N(t) = K_1 e^{-500t} + K_2 t e^{-500t}$$

Contd..

5. The initial conditions for the energy storage elements are: $v_C(0^+) = 0$ V; $i_L(0^+) = 0$ A.
6. To evaluate the coefficients K_1 and K_2, we consider the initial conditions $v_C(0^+)$ and $dv_C(0^+)/dt$. The first of these is given by $v_C(0^+) = 0$, as stated above. Thus,

$$v(0^+) = 0 = K_1 e^0 + K_2 \times 0e^0$$

$$K_1 = 0$$

To use the second initial condition, we observe that

$$\frac{dv}{dt}(0^+) = \frac{dv_C(0^+)}{dt} = \frac{1}{C} i_C(0^+)$$

and we note that the capacitor current *can* change instantaneously; i.e., $i_C(0^-) \neq i_C(0^+)$. To determine $i_C(0^+)$ we need to apply KCL once again at $t = 0^+$:

$$I_S - i_L(0^+) - i_R(0^+) - i_C(0^+) = 0$$

$$i_L(0^+) = 0; \quad i_R(0^+) = \frac{v(0^+)}{R} = 0;$$

Therefore

$$i_C(0^+) = I_S - 0 - 0 - 0 = 5 \text{ A}$$

Contd..

and we conclude that

$$\frac{dv}{dt}(0^+) = \frac{1}{C} i_C(0^+) = 5$$

Now we can obtain a second equation in K_1 and K_2,

$$i_C(t) = C\frac{dv}{dt} = C\left[K_1(-500)e^{-500t} + K_2 e^{-500t} + K_2(-500)te^{-500t}\right]$$

$$i_C(0^+) = C\left[K_1(-500)e^0 + K_2 e^0 + K_2(-500)(0)e^0\right]$$

$$5 = C\left[K_1(-500) + K_2\right]$$

$$K_2 = \frac{5}{C} = 2.5 \times 10^6$$

Finally, the complete solution is:

$$v(t) = 2.5 \times 10^6 te^{-500t} \text{ V}$$

Contd..

A plot of the voltage response of this critically damped circuit is shown in Figure 25.

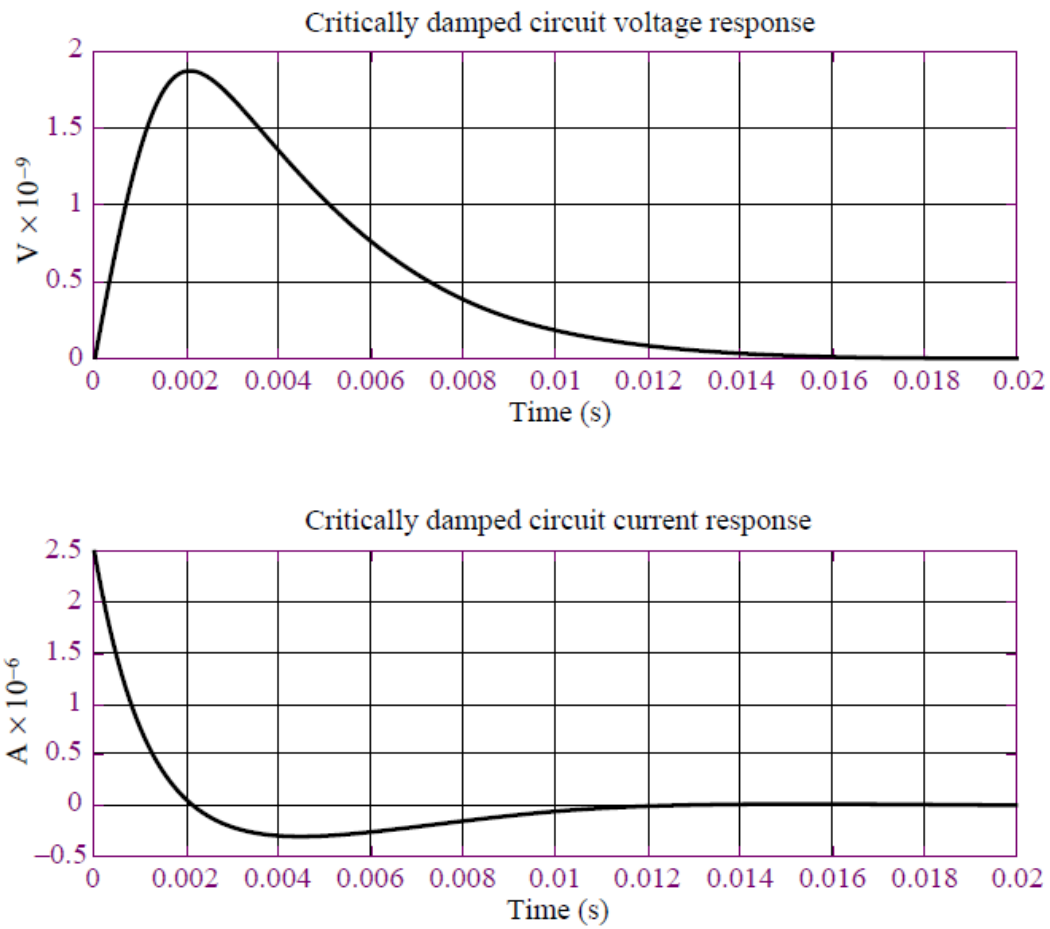

Figure 25

Examples 3

3. Determine the complete response of the circuit of Figure 26. Given R = 10 ; C = 10 μF; L = 5 mH.

Ans:

Assumptions: No energy is stored in the capacitor and inductor before the switch closes; i.e., $v_C(0^-) = 0$ V; $i_L(0^-) = 0$ A.

Analysis: Since the load voltage is given by the expression $v_{\text{load}} = Ri_L(t)$, we shall solve for the inductor current.

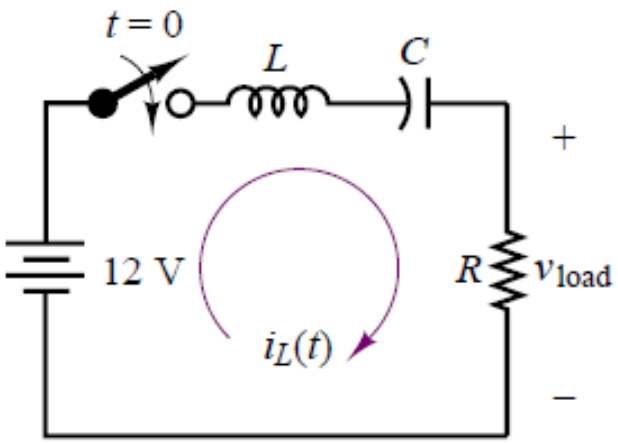

Figure 26

1. Apply KVL to determine the circuit differential equation:

$$V_B - v_L(t) - v_C(t) - v_R(t) = 0$$

$$V_B - L\frac{di_L}{dt} - \frac{1}{C}\int_{-\infty}^{t} i_L dt - i_L R = 0$$

$$\frac{d^2 i_L}{dt^2} + \frac{R}{L}\frac{di_L}{dt} + \frac{1}{LC}i_L = \frac{1}{L}\frac{dV_B}{dt} = 0 \qquad t > 0$$

Contd..

2. We determine the characteristic polynomial by substituting s for d/dt:

$$s^2 + \frac{R}{L}s + \frac{1}{LC} = 0$$

$$s_{1,2} = -\frac{L}{2R} \pm \frac{1}{2}\sqrt{\left(\frac{R}{L}\right)^2 - \frac{4}{LC}}$$

$$= -1{,}000 \pm j4359$$

These are complex conjugate roots, therefore we have an underdamped circuit with natural response given by equation 5.65:

$$i_{LN}(t) = K_1 e^{(-1{,}000+j4{,}359)t} + K_2 e^{(-1{,}000-j4{,}359)t}$$

3. The forced response is zero, as stated earlier, because of the behavior of the capacitor as $t \to \infty$: $F = 0$.

4. The complete solution is therefore equal to the natural response:

$$i_L(t) = i_{LN}(t) = K_1 e^{(-1{,}000+j4{,}359)t} + K_2 e^{(-1{,}000-j4{,}359)t}$$

Contd..

5. The initial conditions for the energy storage elements are $v_C(0^+) = 0$ V; $i_L(0^+) = 0$ A.
6. To evaluate the coefficients K_1 and K_2, we consider the initial conditions $i_L(0^+)$ and $di_L(0^+)/dt$. The first of these is given by $i_L(0^+) = 0$, as stated above. Thus,

$$i(0^+) = 0 = K_1 e^0 + K_2 e^0$$

$$K_1 + K_2 = 0$$

$$K_1 = -K_2$$

To use the second initial condition, we observe that

$$\frac{di_L}{dt}(0^+) = \frac{1}{L} v_L(0^+)$$

and we note that the inductor voltage *can* change instantaneously; i.e., $v_L(0^-) \neq v_L(0^+)$. To determine $v_L(0^+)$ we need to apply KVL once again at $t = 0^+$:

$$V_S - v_C(0^+) - v_R(0^+) - v_L(0^+) = 0$$

$$v_R(0^+) = i_L(0^+)R = 0; \quad v_C(0^+) = 0$$

Contd..

Therefore

$$v_L(0^+) = V_S - 0 - 0 = 12 \quad \text{V}$$

and

$$\frac{di_L}{dt}(0^+) = \frac{v_L(0^+)}{L} = 2,400$$

Now we can obtain a second equation in K_1 and K_2,

$$\frac{di}{dt}(0^+) = (-1,000 + j4,359)K_1e^0 - (-1,000 - j4,359)K_2e^0$$

and since

$$K_1 = -K_2$$

$$2,400 = K_1[(-1,000 + j4,359) - (-1,000 - j4,359)]$$

$$K_1 = \frac{2,400}{j8,718} = -j0.2753$$

$$K_2 = -K_1 = j0.2753$$

Contd..

Note that K_1 and K_2 are complex conjugates. Finally, the complete solution is:

$$v_{\text{Load}}(t) = Ri_L(t) = 10\left(-j0.2753e^{(-1{,}000+j4{,}359)t} + j0.2753e^{(-1{,}000-j4{,}359)t}\right)$$

$$= 2.753e^{-1{,}000t}\left(-je^{j4{,}359t} + je^{-j4{,}359t}\right)$$

$$= 5.506e^{-1{,}000t}\sin(4{,}359t)\ \text{V}$$

The output voltage of the circuit is shown in Figure 27.

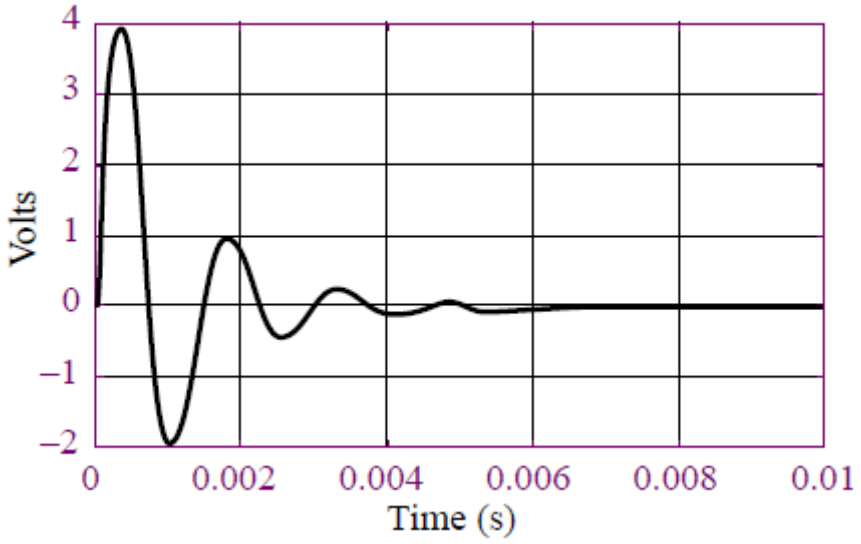

Figure 27

Example

Complete Solution of First-Order Circuit

Problem

Determine an expression for the capacitor voltage in the circuit of Figure 13.

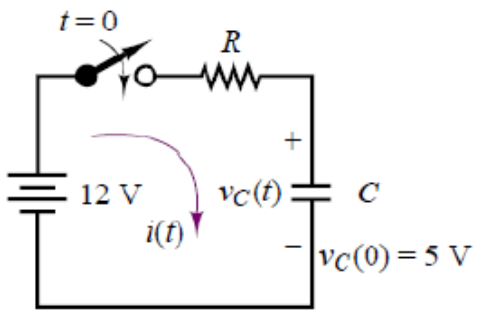

Fig. 13

Solution

Known Quantities: Initial capacitor voltage; battery voltage, resistor and capacitor values.

Find: Capacitor voltage as a function of time, $v_C(t)$, for all t .

Given Data: $v_C(t = 0-) = 5$ V; R = 1 k; C = 470 μF; $V_B = 12$ V.

The capacitor had previously been charged to an initial voltage of 5 V.

So $v_C(t) = 5$ V for $t < 0$

At t = 0 the switch closes, and the circuit is described by the following differential equation, obtained by application of KVL:

$$V_B - RC\frac{dv_C(t)}{dt} - v_C(t) = 9 \qquad t > o$$

$$\frac{dv_C(t)}{dt} - \frac{1}{RC}v_C(t) = \frac{1}{RC}V_B \qquad t > o \qquad (1)$$

Example

We have general first order differential equation as:

$$\frac{dx_F(t)}{dt} - \frac{1}{\tau}x_F(t) = f(t) \qquad (2)$$

Comparing (1) and (2), we get

$x = v_C \qquad \tau = RC \qquad f(t) = \frac{1}{RC}V_B \qquad t > 0\ s$

The natural response of the circuit is therefore of the form:

$x_N(t) = v_{CN}(t) = K\,e^{-t/\tau} = K\,e^{-t/RC} \qquad t > 0\ s,$

while the forced response is of the form:

$x_F(t) = v_{CF}(t) = \tau_f(t) = V_B \qquad t > 0\ s.$

Thus, the complete response of the circuit is given by the expression

$x(t) = v_C(t) = v_{CN}(t) + v_{CF}(t) = K\,e^{-t/RC} + VB \qquad t > 0\ s$

Now that we have the complete response, we can apply the initial condition to determine the value of the constant K. At time $t = 0$,

$v_C(0) = 5 = K\,e^{-0/RC} + V_B$

$K = 5 - 12 = -7\ V$

We can finally write the complete response with numerical values:

$v_C(t) = -7\,e^{-t/0.47} + 12\,V \qquad t > 0$

$= v_CT(t) + v_{CSS}(t)$

$= 12\,(1 - e^{-t/0.47}) + 5\,e^{-t/0.47} \qquad t > 0$

$= v_{CF}(t) + v_{CN}(t)$

Example

The complete response described by the above equations is shown graphically in Fig. 14.

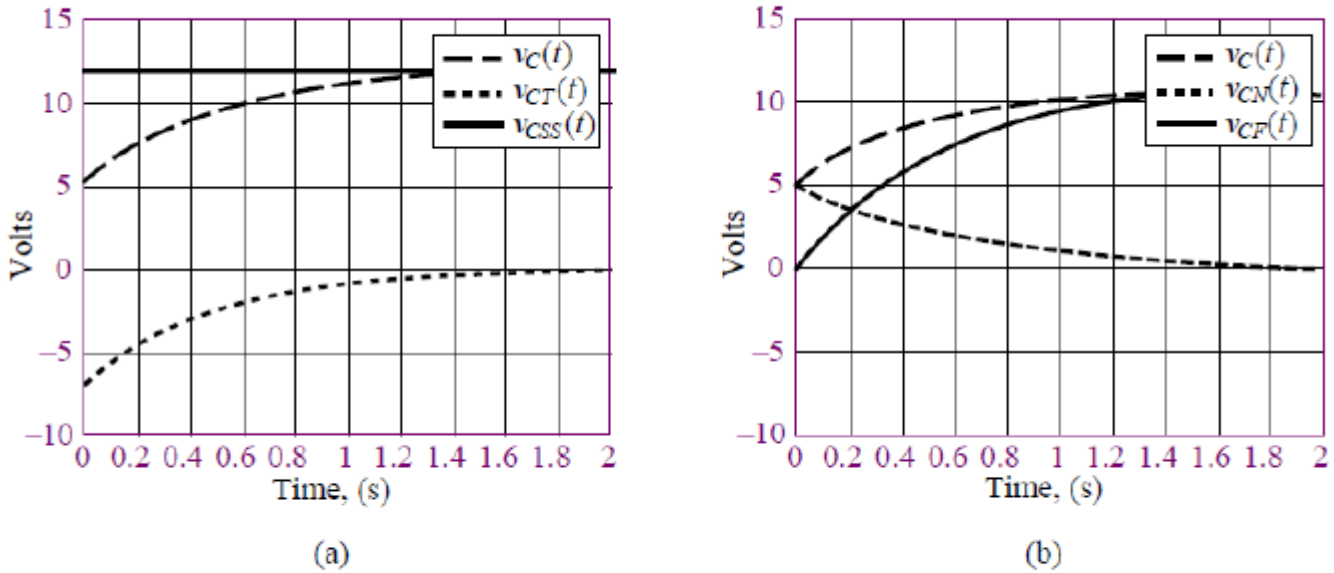

Fig, 14 (a) Complete, transient, and steady-state responses of the circuit
(b) Complete, natural, and forced responses of the circuit.

1. An approximate circuit representation of a DC motor consists of series *RL* circuit, shown in Figure 15. Apply the first-order circuit solution methodology just described to this approximate DC motor equivalent circuit to determine the transient current. Given $i_L(0-) = 0$A, R = 4 Ω, L = 0.1 H and $V_B = 50$ V.
2. Determine the motor voltage for all time in the simplified electric motor circuit model shown in Figure 16. The motor is represented by the series *RL* circuit in the shaded box. Given $R_B = 2\ \Omega$; $R_S = 20\ \Omega$; $R_m = 0.8\ \Omega$; $L = 3$ H; $V_B = 100$ V.
3. The circuit of Figure 17 has a switch that can be used to connect and disconnect a battery. The switch has been open for a very long time. At $t = 0$, the switch closes, and then at $t = 50$ ms, the switch opens again. Assume that $R1 = R2 = 1{,}000\ \Omega$, $R3 = 500\ \Omega$, and $C = 25\ \mu$F.
   a. Determine the capacitor voltage as a function of time.
   b. Plot the capacitor voltage from $t = 0$ to $t = 100$ ms.

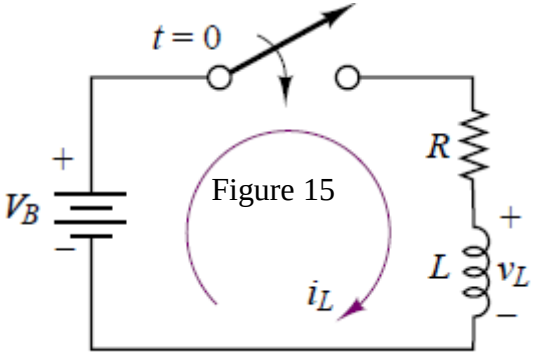

Figure 15

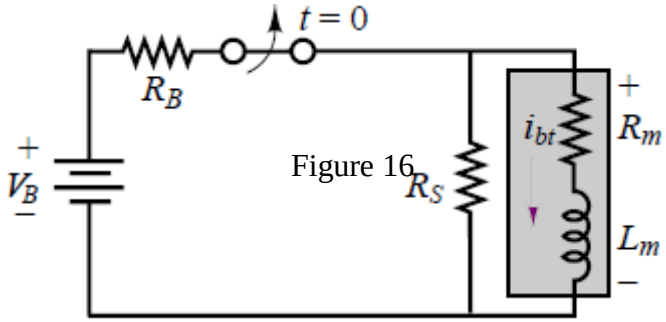

Figure 16

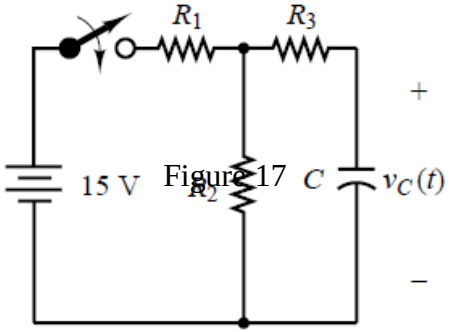

Figure 17

Problems

2. Just before the switch is opened at t = 0, the current through the inductor is 1.70 mA in the direction shown in Figure P.2. Did steady-state conditions exist just before the switch was opened? Given L = 0.9 mH, V_S = 12 V, R_1 =

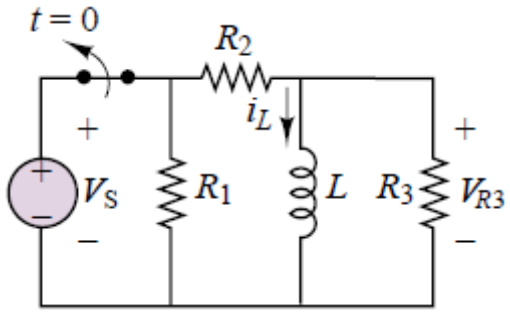

Figure P.2

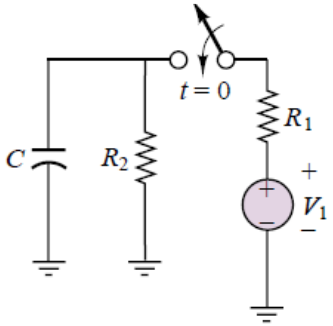

Figure P.3

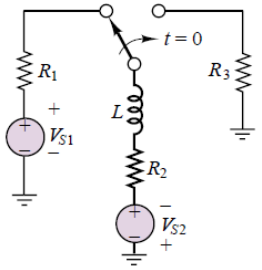

Figure P.4

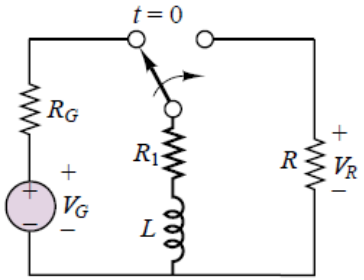

Figure P.5

3. Determine the current through the capacitor just before and just after the switch is closed in Figure P.3. Assume steady-state conditions for *t* < 0. Given V_1 = 12 V, *C* = 150 micro F, R_1 = 400 mohm, R_2 = 2.2 k.

4. Determine i_{R3} (*t*) for *t* > 0 in Figure P.4. Given V_{S1} = 23 V, V_{S2} = 20 V, L = 23 mH, R_1 = 0.7 ohm, R_2 = 13 ohm and R_3 =0.33 k.

5. The circuit of Figure P.5 is a simple model of an automotive ignition system. The switch models the "points" that switch electrical power to the cylinder when the fuel-air mixture is compressed. *R* is the resistance between the electrodes (i.e., the "gap") of the spark plug. Determine the value of *L* and *R1* so that the voltage across the spark plug gap just after the switch is changed is 23 kV and so that this voltage will change exponentially with a time constant τ = 13 ms. Given V_G = 12 V, R_G = 0.37 ohm and R = 1.7 k.

Problems

6. For the circuit shown in Figure P.6, assume that switch S_1 is always open and that switch S_2 closes at t = 0.
   a. Find the capacitor voltage, v_c (t), at t = 0+.
   b. Find time constant, τ , for t ≥ 0.
   c. Find an expression for v_c (t) and sketch the function and evaluate its value for t = 0, τ, 2 τ, 5 τ and 10 τ.
7. In the circuit shown in Figure P.7, V_{S1} = 12 V, V_{S2} = 9 V, R_{S1} = 130 Ω, R_{S2} = 290 Ω, R_1 = 1.1 kΩ, R_2 = 700 Ω, L = 17 mH and C= 0.35 μF. Assume that DC steady-state conditions exist for t < 0. Determine the voltage across capacitor and the current through the inductor and R_{S2} and I approaches infinity.
8. At t < 0, the circuit shown in Figure P.8 is at steady state and the voltage across capacitor is + 7 V. The switch is changed as shown at t = 0 and V_s= 12 V, C = 3300 μF, R_1 = 9.1 k, R_2 = 4.3 k, R_3 = 4.3 k, L – 16 mH. Determine the initial voltage across R_2 just after switch is changed,
9. Assume the circuit of Figure P.9 initially stores no energy, Switch S_1 is open and S_2 is closed. Switch S_1 is closed at t = 0 and S_2 is opened at t = 5 s. Determine an expression for the capacitor voltage for t ≥ 0.

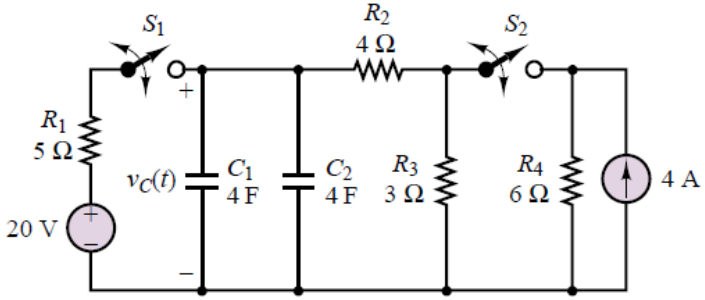

Figure P.6

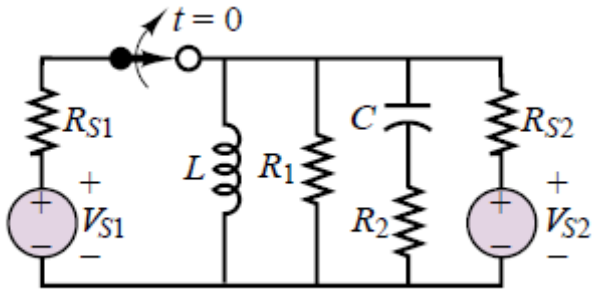

Figure P.7

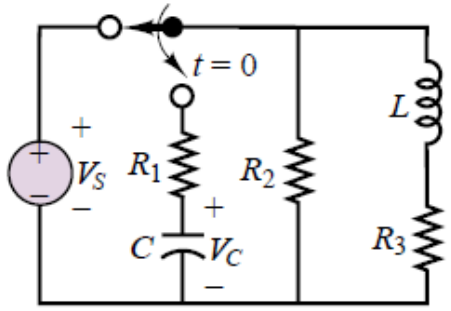

Figure P.8

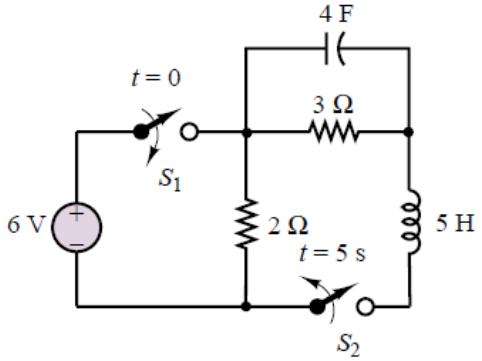

Figure P.9

Problems

10. Find the capacitor voltage $v_c(t)$ and the current $i(t)$ in 200 ohm resistor of Figure P.10 for all time.

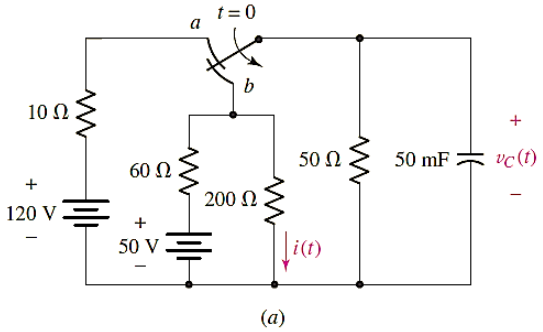

Figure P.10

11. Find an expression for $v_c(t)$ valid for $t > 0$ in circuit of Figure P.11.

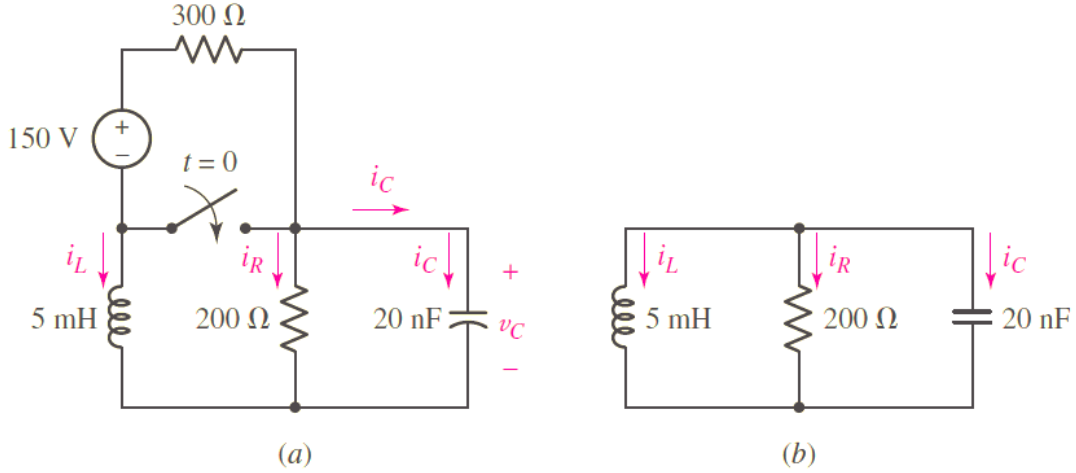

Figure P.11

Overdamped Parallel RLC circuit

1. The circuit of Fig. 1 reduces to a simple parallel RLC circuit after t = 0. Determine an expression for the resistor current i_R valid for all time.

If the circuit after $t > 0$ is overdamped, we expect a response of the form

$$i_R(t) = A_1 e^{s_1 t} + A_2 e^{s_2 t}, \qquad t > 0 \qquad [18]$$

For $t > 0$, we have a parallel *RLC* circuit with $R = 30\ \text{k}\Omega$, $L = 12$ mH, and $C = 2$ pF. Thus, $\alpha = 8.333 \times 10^6\ \text{s}^{-1}$ and $\omega_0 = 6.455 \times 10^6$ rad/s. We do therefore expect an overdamped response, with $s_1 = -3.063 \times 10^6\ \text{s}^{-1}$ and $s_2 = -13.60 \times 10^6\ \text{s}^{-1}$.

To determine numerical values for A_1 and A_2, we first analyze the circuit at $t = 0^-$, as drawn in Fig. 9.6*b*. We see that $i_L(0^-) = i_R(0^-) = 4/32 \times 10^3 = 125\ \mu\text{A}$, and $v_C(0^-) = 4 \times 30/32 = 3.75$ V.

In drawing the circuit at $t = 0^+$ (Fig. 9.6*c*), we only know that $i_L(0^+) = 125\ \mu\text{A}$ and $v_C(0^+) = 3.75$ V. However, by Ohm's law we can calculate that $i_R(0^+) = 3.75/30 \times 10^3 = 125\ \mu\text{A}$, our first initial condition. Thus,

$$i_R(0) = A_1 + A_2 = 125 \times 10^{-6} \qquad [19]$$

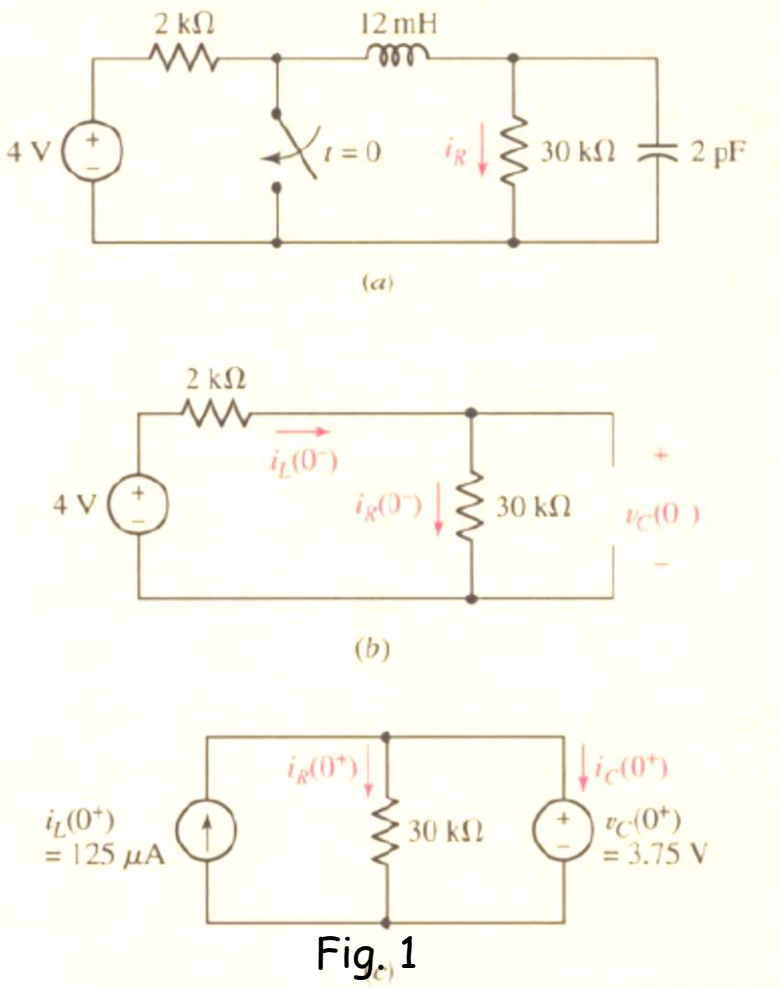

Fig. 1

Overdamped Parallel RLC circuit

How do we obtain a *second* initial condition? If we multiply Eq. [18] by 30×10^3, we obtain an expression for $v_C(t)$. Taking the derivative and multiplying by 2 pF yields an expression for $i_C(t)$:

$$i_C = C\frac{dv_C}{dt} = (2 \times 10^{-12})(30 \times 10^3)(A_1 s_1 e^{s_1 t} + A_2 s_2 e^{s_2 t})$$

By KCL,

$$i_C(0^+) = i_L(0^+) - i_R(0^+) = 0$$

Thus,

$$-(2 \times 10^{-12})(30 \times 10^3)(3.063 \times 10^6 A_1 + 13.60 \times 10^6 A_2) = 0 \qquad [20]$$

Solving Eqs. [19] and [20], we find that $A_1 = 161.3\ \mu\text{A}$ and $A_2 = -36.34\ \mu\text{A}$. Thus,

$$i_R = \begin{cases} 125\ \mu\text{A}, & t < 0 \\ 161.3e^{-3.063\times10^6 t} - 36.34e^{-13.6\times10^6 t}\ \mu\text{A}, & t > 0 \end{cases}$$

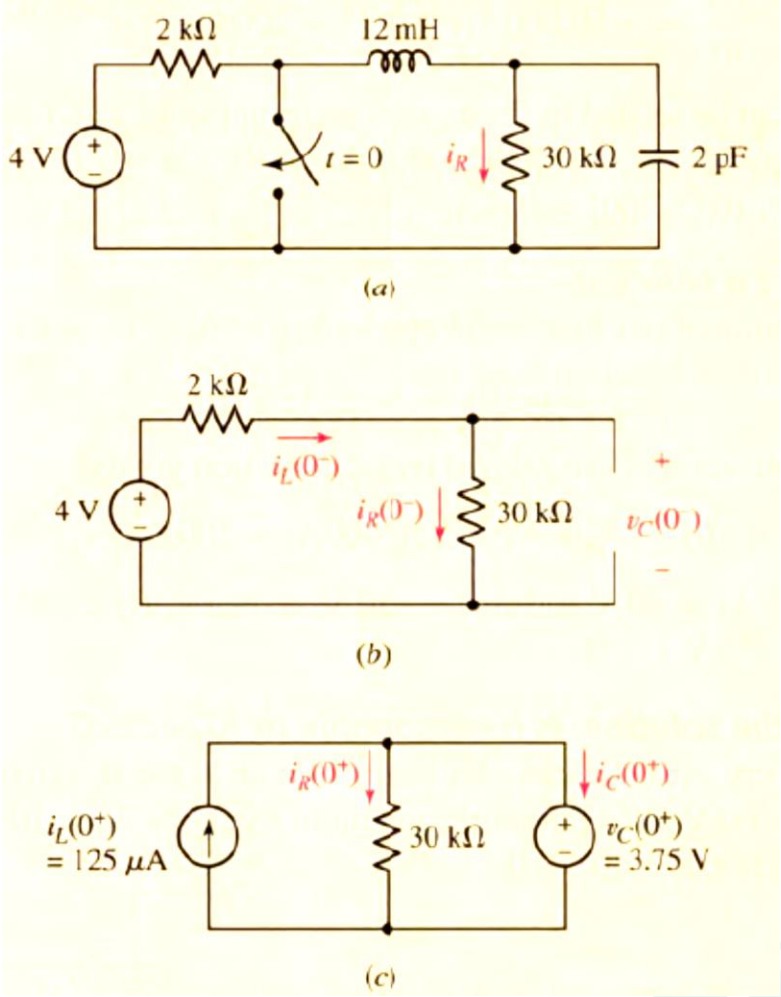

Fig. 1

Overdamped Parallel RLC circuit

2. For the circuit shown in Fig. 2, show that the output voltage v(t) is given as $v(t) = 84(e^{-t} - e^{-6t})$ V. The voltage across the capacitor v(t) =0 and current through inductor i(t) = 10 A for t < 0.

We define new term resonant frequency $(\boldsymbol{\omega_0}) = \frac{1}{\sqrt{L\,C}}$ and exponential damping factor $(\boldsymbol{\alpha}) = \frac{1}{2\,R\,C}$. The constant α is a measure how rapidly the natural response decays to its final value.

For the given circuit, we have

$$\alpha = 3.5 \quad \omega_0 = \sqrt{6} \quad (\text{all } s^{-1})$$
$$s_1 = -1 \quad s_2 = -6$$

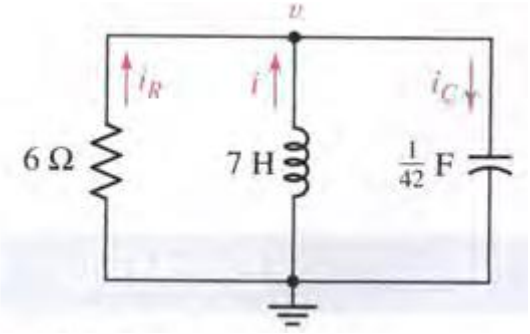

- Fig. 2

And the general form of natural response is $v(t) = A_1 e^{-t} + A_2 e^{-6t}$

and $\frac{dv}{dt} = -A_1\, e^{-t} - 6\, A_2 e^{-6t}$

The constants A_1 and A_2 is obtained by using the initial conditions.

At $t = 0$

$v(t) = 0$ and $i(t) = 10\ A$, thus $A_1 + A_2 = 0$

At $t = 0$, $\frac{dv}{dt} = -A_1 - 6\,A_2$

One can evaluate $\frac{dv}{dt}$ from the expression $i_C = C\frac{dv}{dt}$

Overdamped Parallel RLC circuit

One can evaluate $\frac{dv}{dt}$ from the expressio $i_C = C\frac{dv}{dt}$

and

$$-i_C(0) + i(0) + i_R(0) = 0$$

That is

$$\left.\frac{dv}{dt}\right|_{t=0} = \frac{i_C(0)}{C} = \frac{i(0) + i_R(0)}{C} = \frac{i(0)}{C} = 420 \text{ V/s}$$

$$v(t) = 84(e^{-t} - e^{-6t}) \text{ V}$$

Output voltage

The output is maximum at *tm = 0.358 s and vm = 48.9 V*

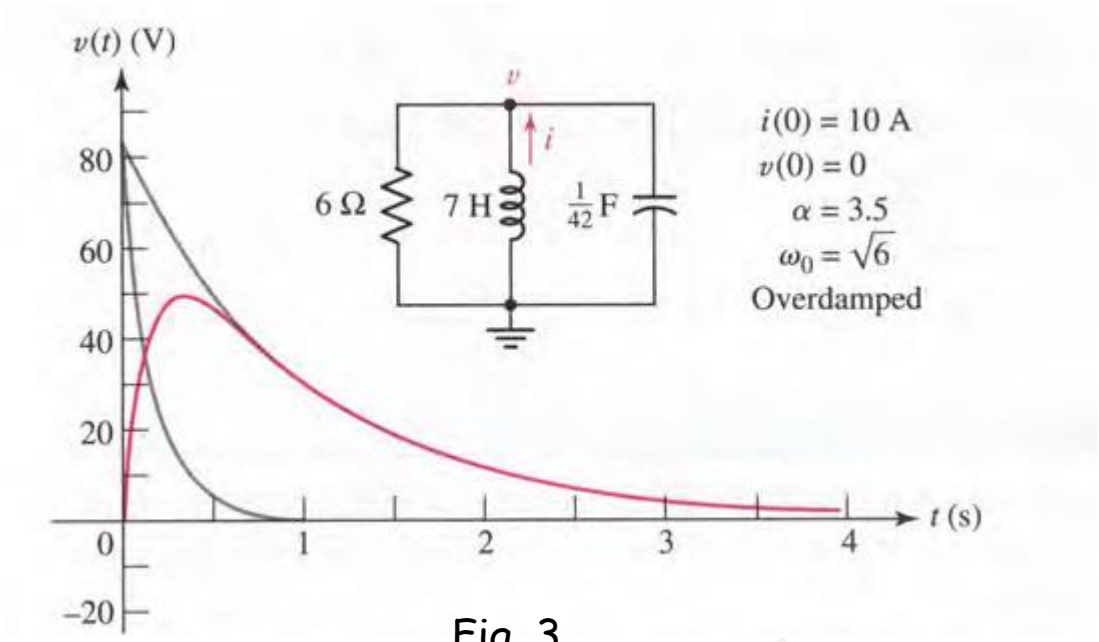

Fig. 3

Settling time

- Time required to reduce the response magnitude to less than 1% of the maximum response magnitude is called the settling time.
- For the previous problem, find maximum V, time when V is max and the settling time.

Settling time Example

For $t > 0$, the capacitor current of a certain source-free parallel *RLC* circuit is given by $i_c(t) = 2e^{-2t} - 4e^{-t}$ A. Sketch the current in the range $0 < t < 5$ s, and determine the settling time.

We have $i_c(t) = 2e^{-2t} - 4e^{-t}$ A

This is plotted in Fig. 4.

and $\frac{di_c}{dt} = -4e^{-2t} - 4e^{-t} = 0$ at $t = tm$.

By iteration we have $ts = 5.296$ s.

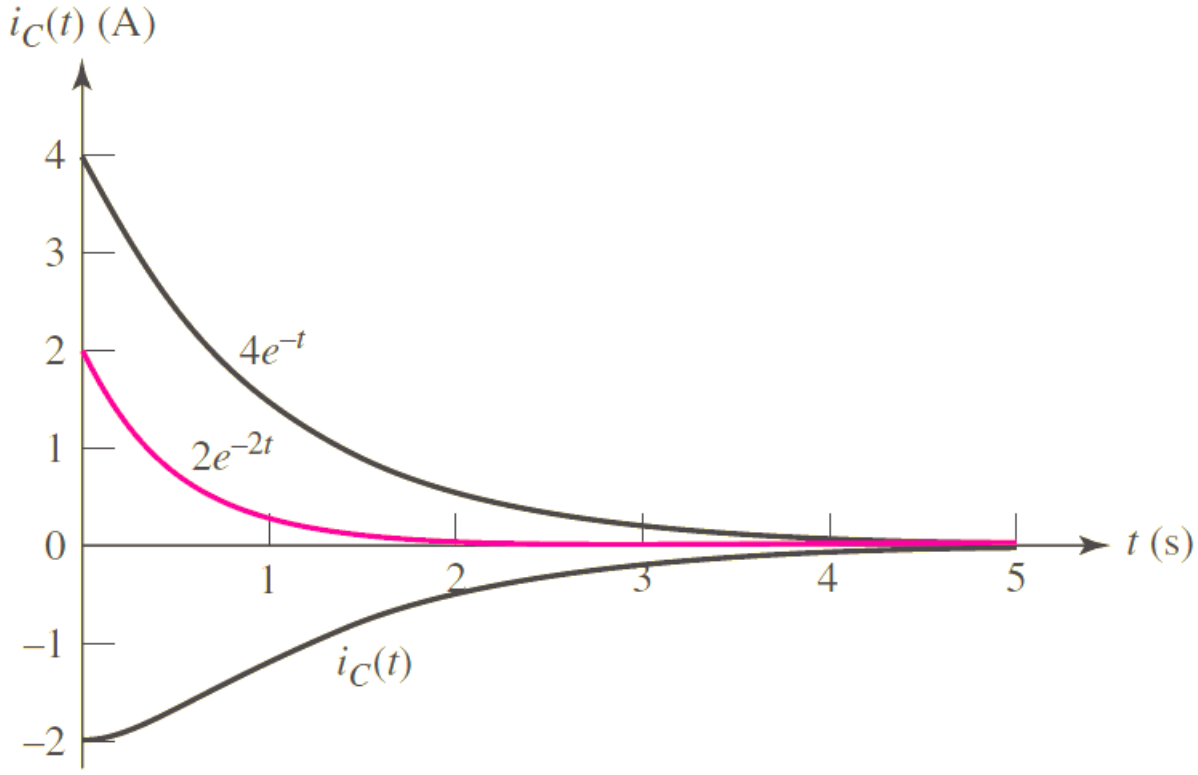

Fig. 4

Critically Damped Parallel R L C

In the circuit shown, find the value of resistance (a replacement for 6 ohm resistance) such that this circuit response will be critically damped. It is given that V(0) = 0 V and i(0) = 10 A.

Ans:

A circuit is said to be critically damped if following conditions are satisfied:

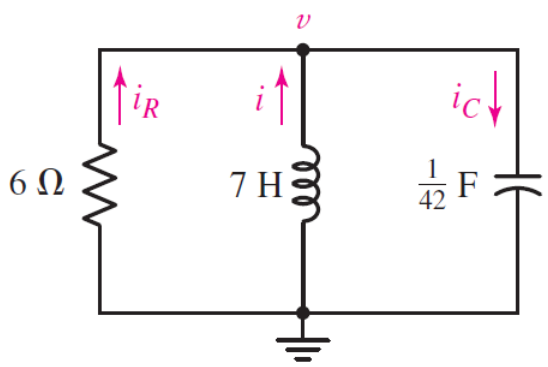

$$\alpha = \omega_0$$

Where $\omega_0 = \frac{1}{\sqrt{L\,C}}$ and $\alpha = \frac{1}{2\,R\,C}$

Thus $LC = 4R^2C^2$

or $L = 4R^2C$

For critical damping R = $\sqrt{\frac{L}{4\,C}}$ Ohm $= \frac{7\sqrt{6}}{2}$ = 8.57 ohm

The following equation describes the behaviour of the circuit

$$\frac{d^2v}{dt^2} + 2\alpha\frac{dv}{dt} + \alpha^2 v = 0$$

The solution to above differential equations is following:

$$v(t) = 420te^{-2.45t}\ \text{V}$$

Critically Damped Parallel R L C

The output voltage is given as $v(t) = 420te^{-2.45t}$ V

At t = ∞, the value of *v(t)* can be obtained and its equal to *0.*

As described earlier this function will increase and will have a peak and then start decreasing exponentially. The peak will occur at t_m *= 0.406 s and the peak voltage* v_m *would be 63.1 V. Settling time* t_s *will be 3.12 s.*

The v(t) versus time plot is shown below.

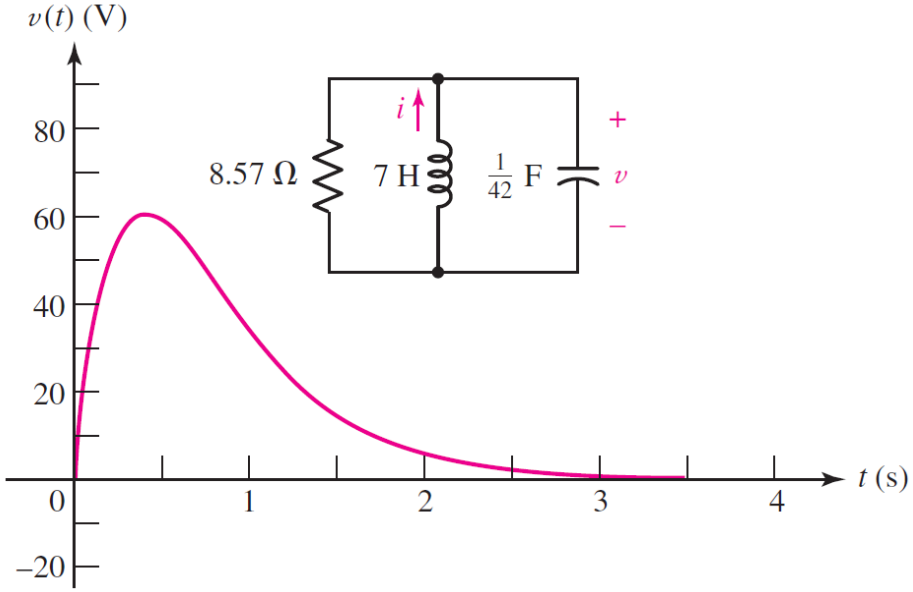

Underdamped parallel RLC Circuits

- The form of underdamped response will be given as

$$v(t) = A_1 e^{s_1 t} + A_2 e^{s_2 t}$$

- Where

$$s_{1,2} = -\alpha \pm \sqrt{\alpha^2 - \omega_0^2}$$

$$\sqrt{\alpha^2 - \omega_0^2} = \sqrt{-1}\sqrt{\omega_0^2 - \alpha^2} = j\sqrt{\omega_0^2 - \alpha^2}$$

- And

$$\omega_d = \sqrt{\omega_0^2 - \alpha^2}$$

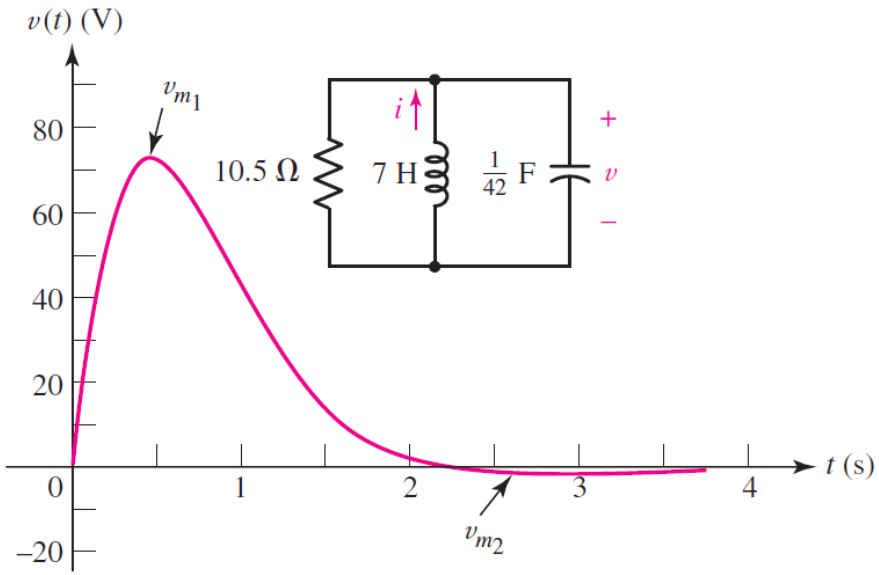

- The response may be written as $v(t) = e^{-\alpha t}(A_1 e^{j\omega_d t} + A_2 e^{-j\omega_d t})$

$$v(t) = e^{-\alpha t}\left\{(A_1 + A_2)\left[\frac{e^{j\omega_d t} + e^{-j\omega_d t}}{2}\right] + j(A_1 - A_2)\left[\frac{e^{j\omega_d t} - e^{-j\omega_d t}}{j2}\right]\right\}$$

$$v(t) = e^{-\alpha t}(B_1 \cos \omega_d t + B_2 \sin \omega_d t)$$

Underdamped parallel RLC Circuits

- We consider the circuit shown.
- We have

$$\alpha = \frac{1}{2RC} = 2\ \mathrm{s}^{-1}$$

$$\omega_0 = \frac{1}{\sqrt{LC}} = \sqrt{6}\ \mathrm{s}^{-1}$$

- And

$$\omega_d = \sqrt{\omega_0^2 - \alpha^2} = \sqrt{2}\ \mathrm{rad/s}$$

- The response is now
- We have *v (0) = 0* and

$$v(t) = e^{-2t}(B_1 \cos\sqrt{2}t + B_2 \sin\sqrt{2}t)$$

- and

$$v(t) = B_2 e^{-2t} \sin\sqrt{2}t$$

$$\frac{dv}{dt} = \sqrt{2}B_2 e^{-2t}\cos\sqrt{2}t - 2B_2 e^{-2t}\sin\sqrt{2}t$$

- At t = 0,

$$\left.\frac{dv}{dt}\right|_{t=0} = \sqrt{2}B_2 = \frac{i_C(0)}{C} = 420$$

- And

$$v(t) = 210\sqrt{2}e^{-2t}\sin\sqrt{2}t$$

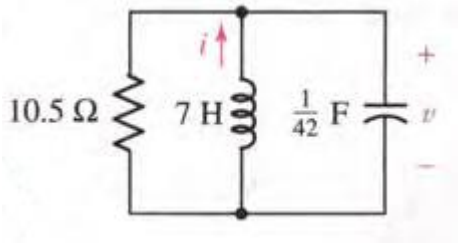

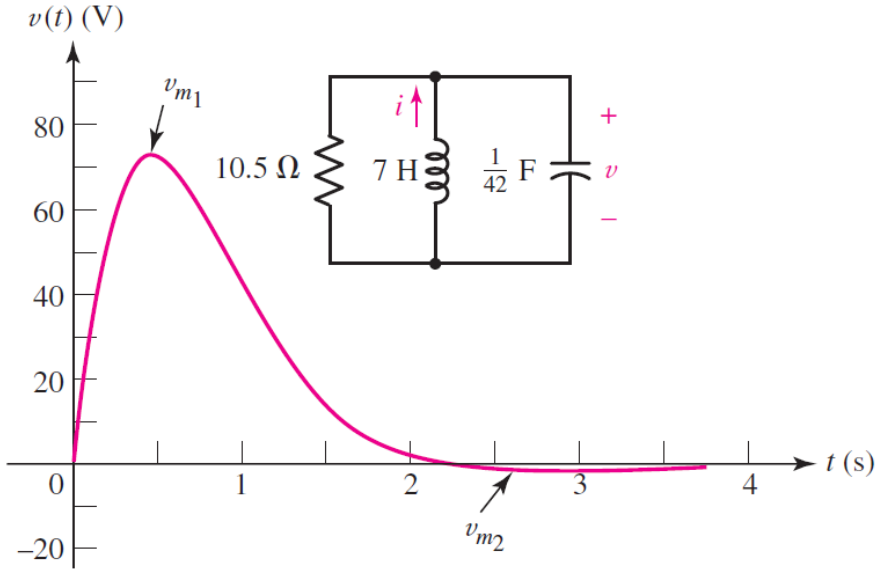

Underdamped parallel RLC Circuits

$$v(t) = 210\sqrt{2}e^{-2t}\sin\sqrt{2}t$$

- The response of this circuit looks like in Fig. a. For different values of R > 10.5 ohm, we find oscillations around v = 0 (Fig. b).

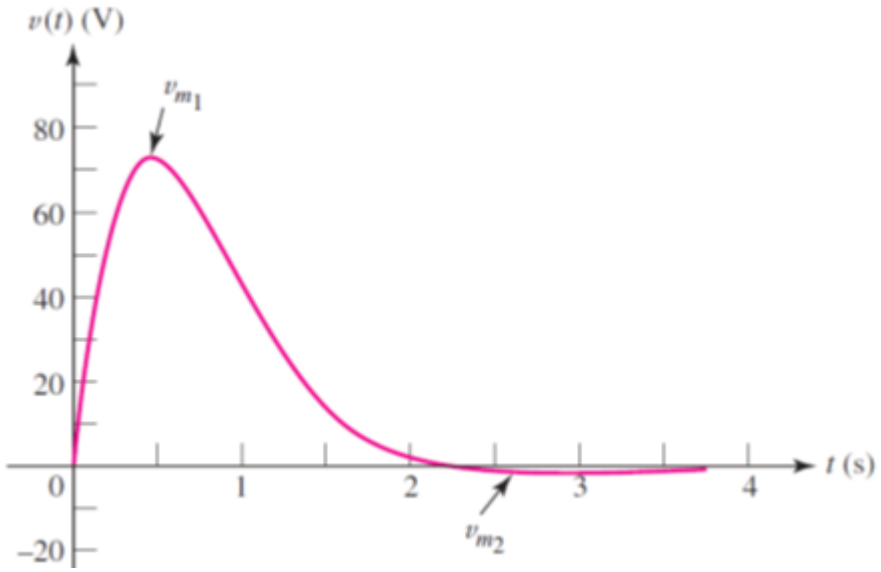

Fig. a

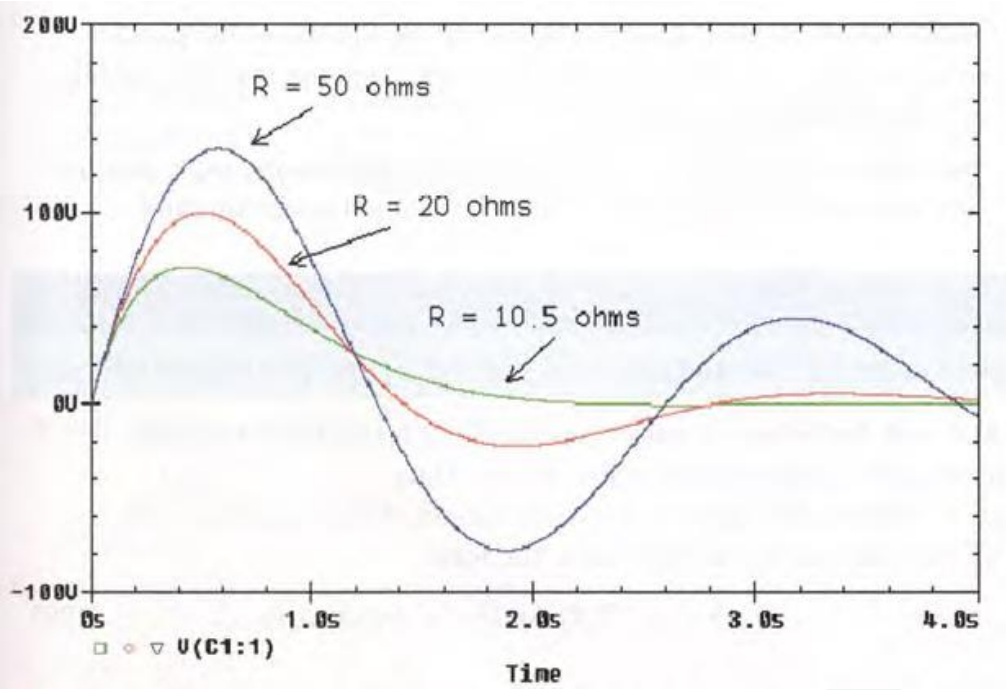

Fig. b

Example

Determine $i_L(t)$ for the circuit 9.17(a) and plot the waveform.

At $t = 0$, both the 3 A source and the 48 Ω resistor are removed, leaving the circuit shown in Fig. 9.17*b*. Thus, $\alpha = 1.2\ \text{s}^{-1}$ and $\omega_0 = 4.899$ rad/s. Since $\alpha < \omega_0$, the circuit is *underdamped*, and we therefore expect a response of the form

$$i_L(t) = e^{-\alpha t}(B_1 \cos \omega_d t + B_2 \sin \omega_d t) \qquad [28]$$

where $\omega_d = \sqrt{\omega_0^2 - \alpha^2} = 4.750$ rad/s. The only remaining step is to find B_1 and B_2.

Fig. 9.17*c* shows the circuit as it exists at $t = 0^-$. We may replace the inductor with a short circuit and the capacitor with an open circuit; the result is $v_C(0^-) = 97.30$ V and $i_L(0^-) = 2.027$ A. Since neither quantity can change in zero time, $v_C(0^+) = 97.30$ V and $i_L(0^+) = 2.027$ A.

Substituting $i_L(0) = 2.027$ into Eq. [28] yields $B_1 = 2.027$ A. To determine the other constant, we first differentiate Eq. [28]:

$$\frac{di_L}{dt} = e^{-\alpha t}(-B_1\omega_d \sin \omega_d t + B_2\omega_d \cos \omega_d t) - \alpha e^{-at}(B_1 \cos \omega_d t + B_2 \sin \omega_d t) \qquad [29]$$

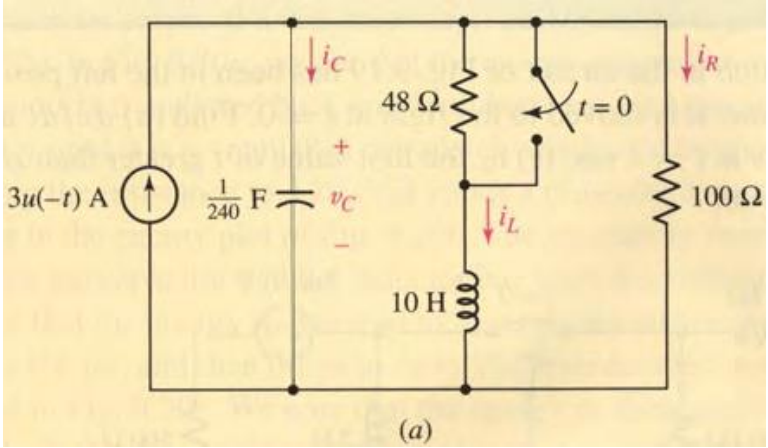

(a)

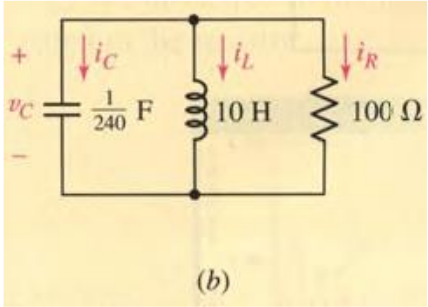

(b)

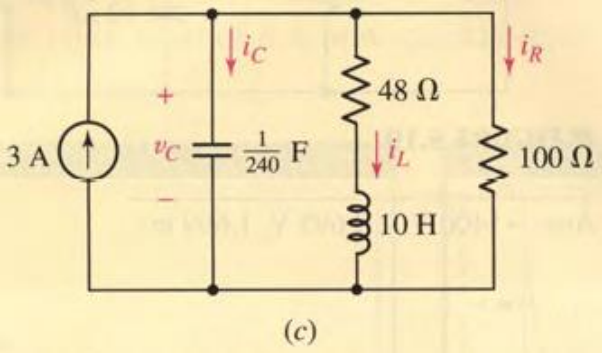

(c)

Example

and note that $v_L(t) = L(di_L/dt)$. Referring to the circuit of Fig. 9.17*b*, we see that $v_L(0^+) = v_C(0^+) = 97.3$ V. Thus, multiplying Eq. [29] by $L = 10$ H and setting $t = 0$, we find that

$$v_L(0) = 10(B_2\omega_d) - 10\alpha B_1 = 97.3$$

Solving, $B_2 = 2.561$ A, so that

$$i_L = e^{-1.2t}(2.027\cos 4.75t + 2.561\sin 4.75t)\ \text{A}$$

which we have plotted in Fig. 9.18.

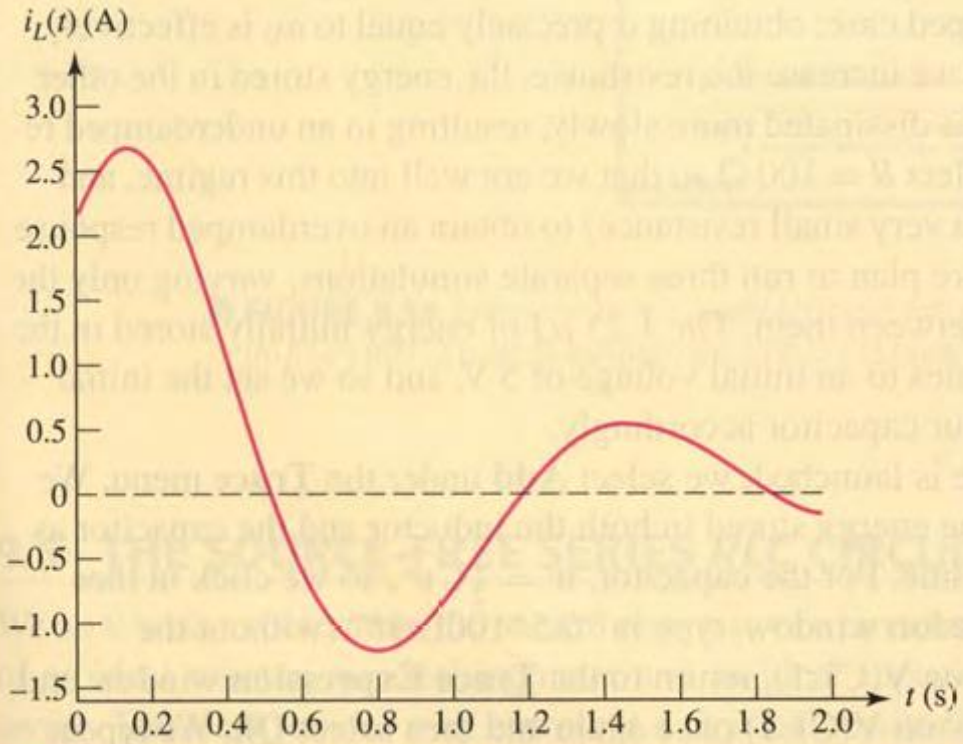

FIGURE 9.18 Plot of $i_L(t)$, showing obvious signs of being an underdamped response.

Example

Determine the initial conditions in the circuit of the Fig. P.0, and also find values at t = 0+ for the first derivatives of i_L and v_C. Then find $v_C(t)$

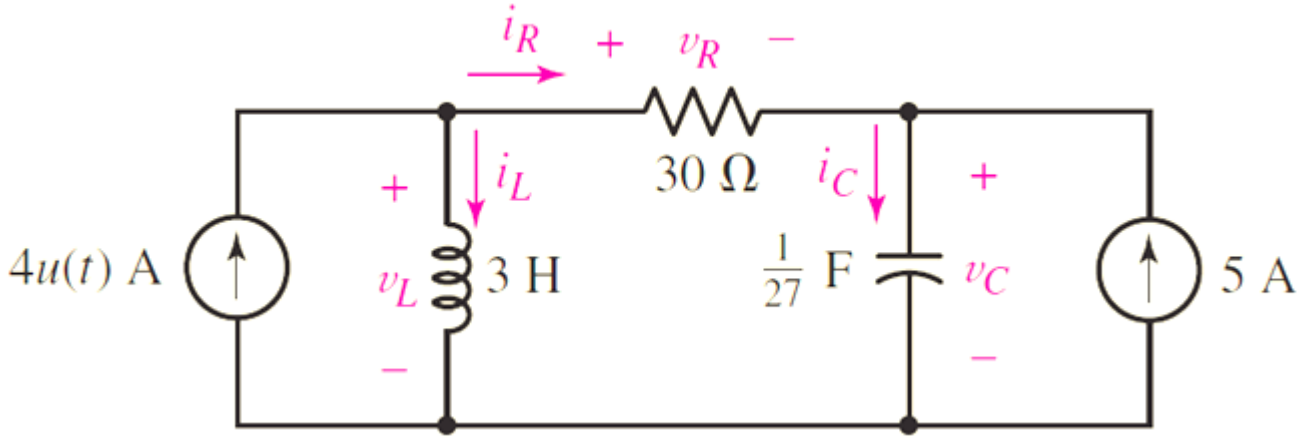

Fig. P.0

Example

Determine the initial conditions in the circuit of the Fig. P.a, and also find values at t = 0+ for the first derivatives of i_L and v_C. Then find $v_C(t)$

Determine the initial conditions in the circuit of the Fig. P.a, and also find values at t = 0+ for the first derivatives of i_L and v_C. Then find $v_C(t)$

Our objective is to find values of each current ant voltage at both t $= 0^- \; and \; t = 0^+$. The initial values of the derivatives can be easily found.

Fig. P.a

Our objective is to find values of each current ant voltage at both t $= 0^- \; and \; t = 0^+$. The initial values of the derivatives can be easily found.

Example

At $t = 0^-$, only the right hand source is active. It is shown in fig. P.b. The circuit seems to be in this condition forever and all currents and voltages are constant. Thus a dc current through inductor requires zero voltage across it:

$$v_L(0^-) = 0$$

And dc voltage across the capacitor requires zero current through it:

$$i_C(0^-) = 0$$

Applying Kirchhoff's current law to the right node, we get

$$i_R(0^-) = -5\ A$$

This gives

$$v_R(0^-) = -150\ V$$

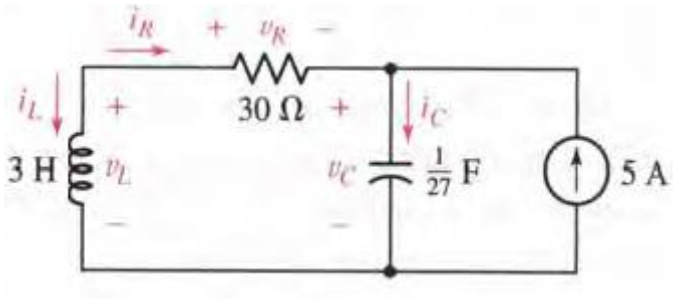

Fig. P.b

Applying Kirchhoff's voltage law around left hand mesh, we get

$$v_C(0^-) = 150\ V$$

Inductor current $\quad i_L(0^-) = 5\ A$

Example

$t = 0^+$, During $t = 0^-$ to $t = 0^+$, left hand current source is active and many of the current and voltage values at $t = 0^-$ will change abruptly. Corresponding circuit is shown in fig. P.c.

The inductor current and capacitor voltage can not change instantly and both of these remains constant during switching interval. Thus

$$i_L(0^+) = 5 \text{ A} \qquad \text{and} \qquad v_C(0^+) = 150 \text{ V}$$

We have at left hand node

$$i_R(0^+) = -1 \text{ A} \qquad \text{and} \qquad v_R(0^+) = -30 \text{ V}$$

$$\text{So} \quad i_C(0^+) = 4 \text{ A} \qquad \text{and} \qquad v_L(0^+) = 120 \text{ V}$$

We have our six initial values at $t = 0^-$ and six more at $t = 0^+$, only the capacitor voltages and inductor current remains unchanged from $t = 0^-$ values.

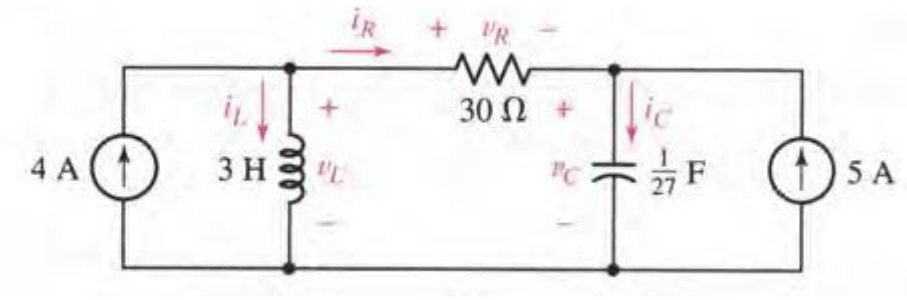

Fig. P.b

Example

In order to determine $v_C(t)$, the circuit appears as a series RLC circuits and s_1 = - 1 and s_2 = - 9.

The forced response is obtained by drawing the dc equivalent. The forced response is 150 V.

$$v_C(t) = 150 + A\, e^{-t} + \mathrm{B}\, e^{-9t}$$

$$v_C(0^+) = 150 = 150 + A + \mathrm{B}$$

A + B = 0

$$\frac{dv_C}{dt} = -A\, e^{-t} - 9\mathrm{B}\, e^{-9t}$$

$$\frac{dv_C}{dt} \text{ at } t = 0^+ = 108 = -A - 9\mathrm{B}$$

We have A = 13.5 and B = -13.5

And complete response $v_C(t) = 150 + 13.5\,(e^{-t} - e^{-9t})$ V

AC response of circuits

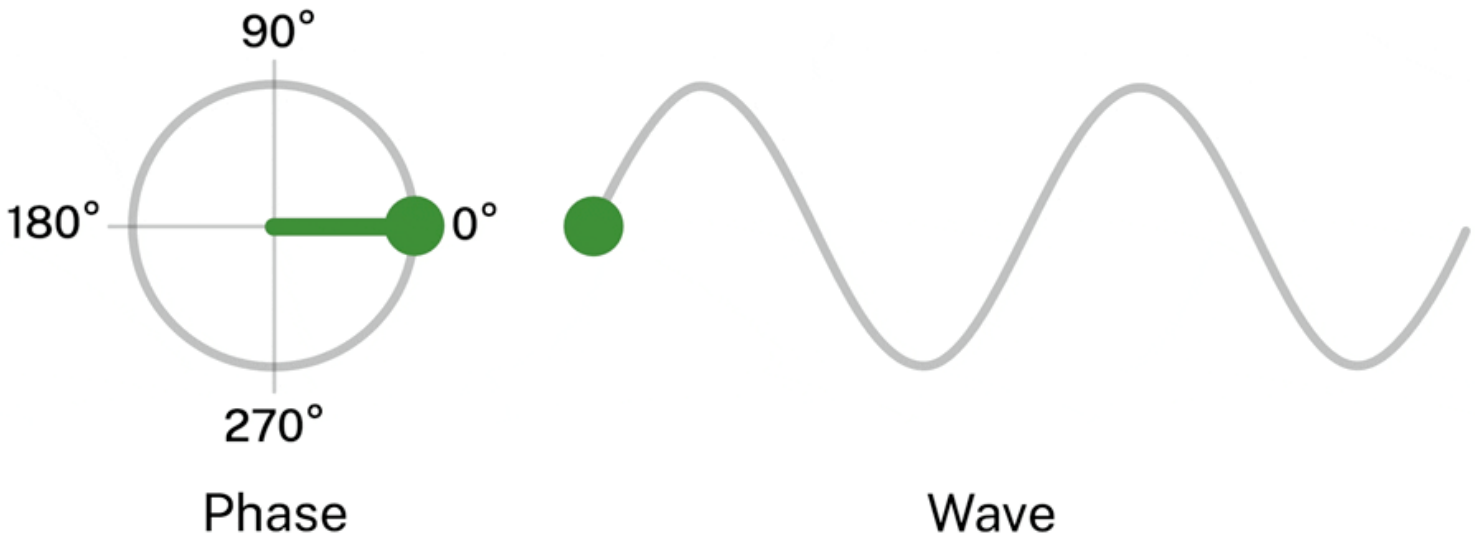

Alternating signal is an electric signal which periodically reverses direction

TIME-DEPENDENT SIGNAL SOURCES

- This section will consider sources that generate time-varying voltages and currents and, in particular, sinusoidal sources.
- Fig. 1 shows the convention employed to denote time-dependent signal sources.
- Most important classes of time-dependent signals is that of periodic signals.

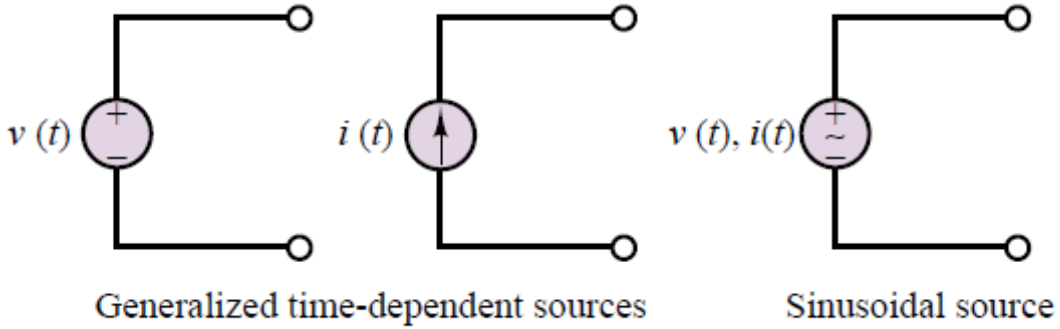

Fig. 1 Time-dependent signal sources

- These signals appear frequently in practical applications and are a useful approximation of many physical phenomena.
- A periodic signal x(t) is a signal that satisfies the following equation:
- $x(t) = x(t + nT)$ $\quad n = 1, 2, 3,$
- Where T is the time period of x(t).

TIME-DEPENDENT SIGNAL SOURCES

- Fig. 2 shows a number of the periodic waveforms that are typically encountered in the study of electrical circuits.
- Waveforms such as the sine, triangle, square, pulse, and saw-tooth waves are provided in the form of voltages (or, less frequently, currents) by commercially available signal generators. Such instruments allow for selection of the waveform peak amplitude, and of its period.

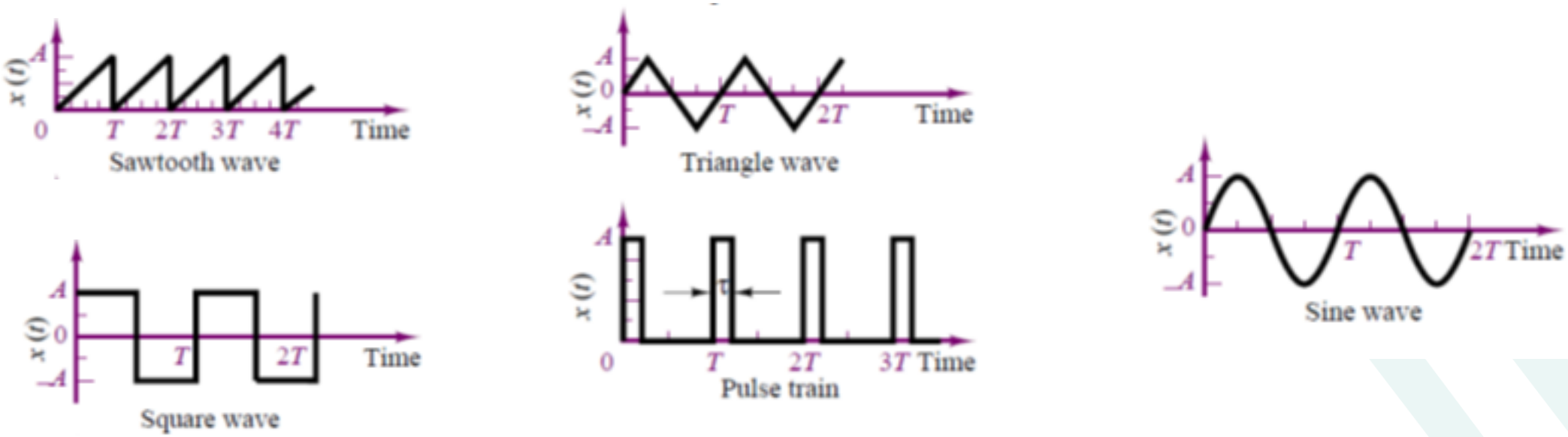

Fig. 2

- These signals appear frequently in practical applications and are a useful approximation of many physical phenomena.

TIME-DEPENDENT SIGNAL SOURCES

- A periodic signal x(t) is a signal that satisfies the following equation:
  - $x(t) = x(t + nT)$ $\quad n = 1, 2, 3,$
  - Where T is the time period of x(t).
  - Frequency of the signal is given by 1/T Hz

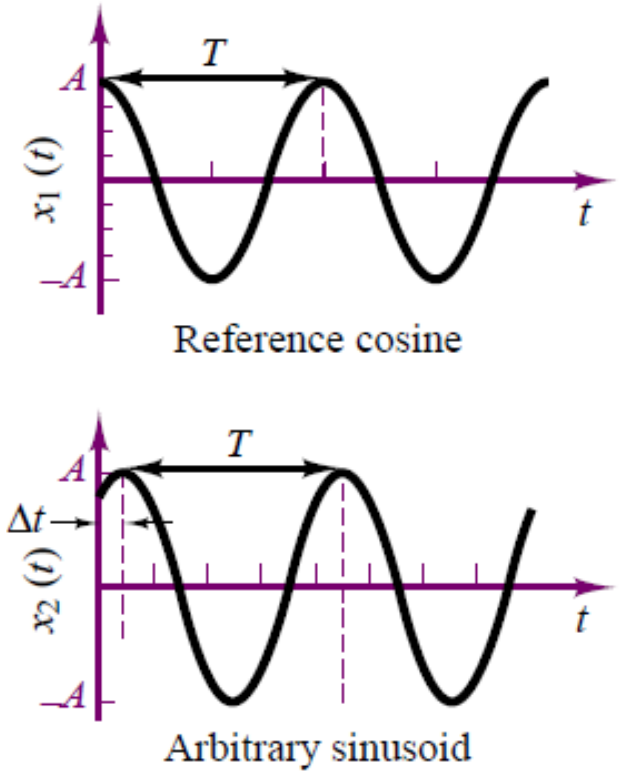

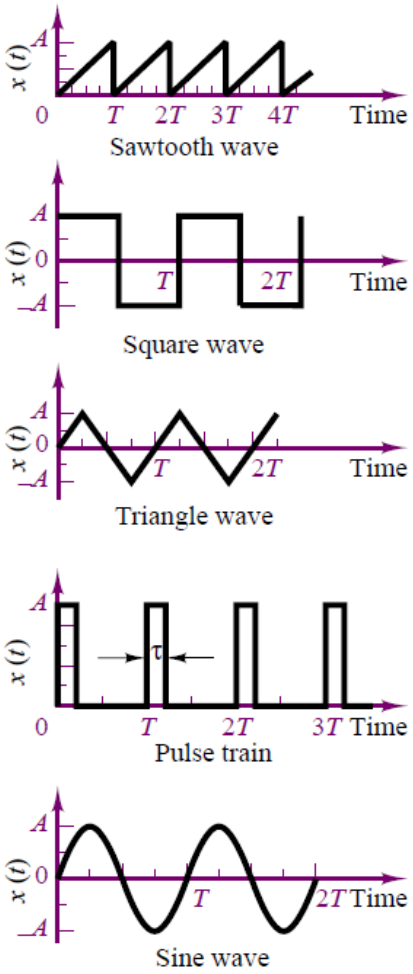

Fig. 2

TIME-DEPENDENT SIGNAL SOURCES

- Fig. 3 shows a sinusoidal waveform and its relevant parameters.
- A generalized sinusoid is defined as follows:

$$X(t) = A\cos(\omega t + \varphi)$$

where A is the peak amplitude

ω is the frequency in rad/s and

Φ is the phase.

$$X1(t) = A\cos(\omega t)$$
$$X2(t) = A\cos(\omega t + \varphi).$$

Natural frequency $f = 1/T$ (cycles/s or Hz)

$$\omega = 2\pi f \text{ (radians/s)}$$

$$\varphi = 2\pi(\Delta T/T) \text{ (radians)}$$

$$= 360(\Delta T/T) \text{ (degree)}$$

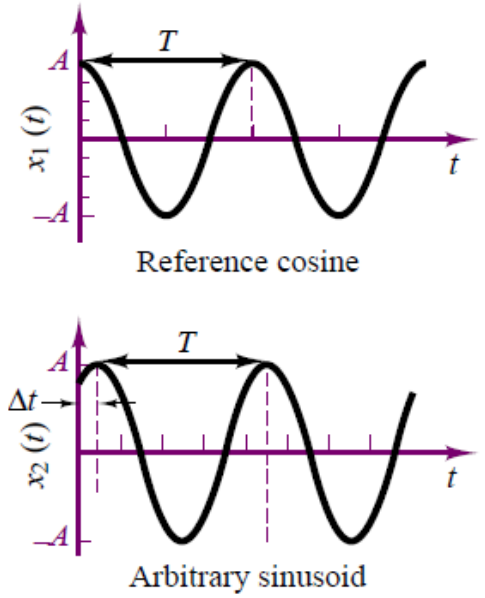

Fig. 3 Sinusoidal signal

Fig. 2

Complex Waves

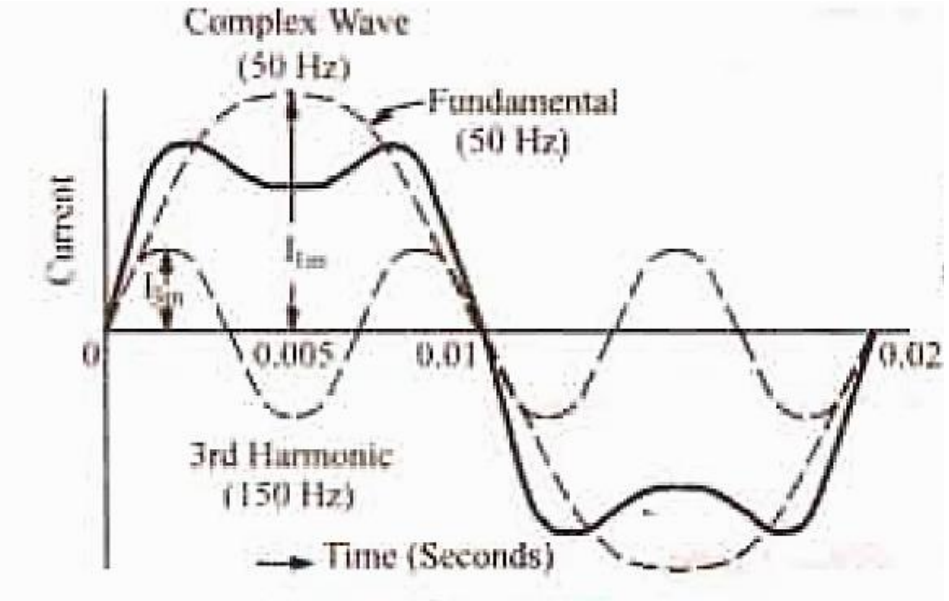

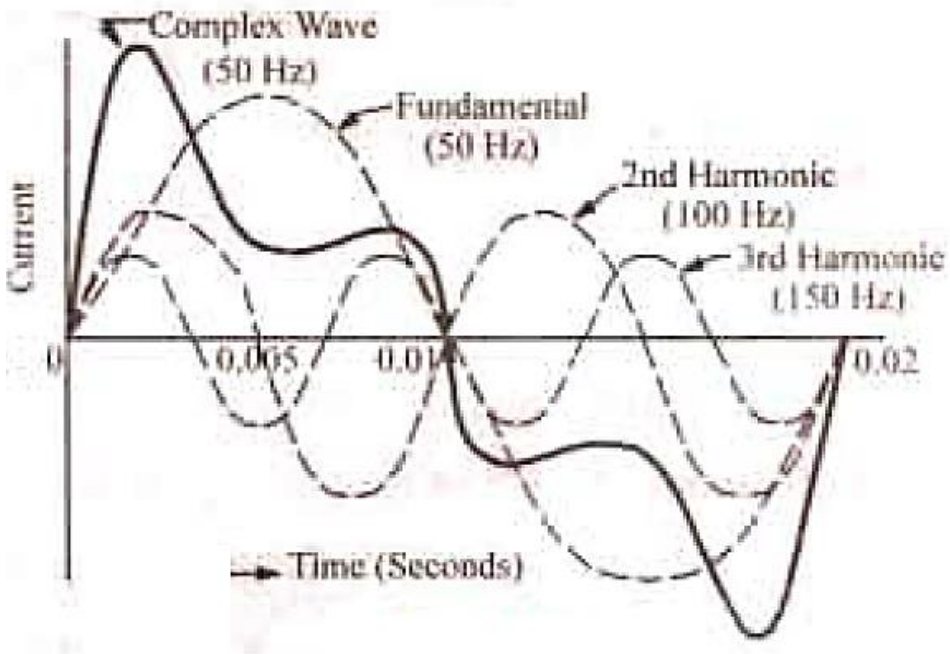

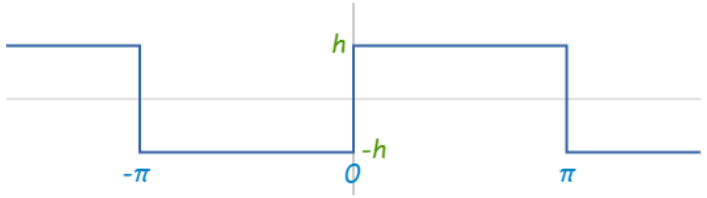

a square wave

sin(x)

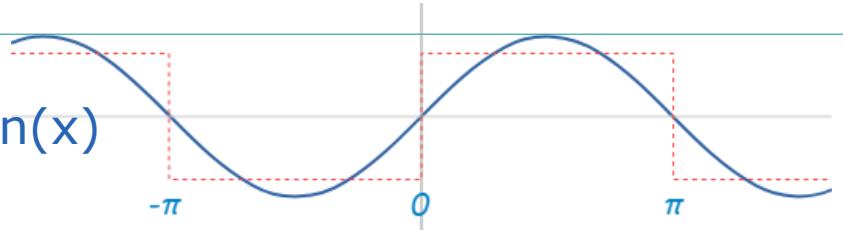

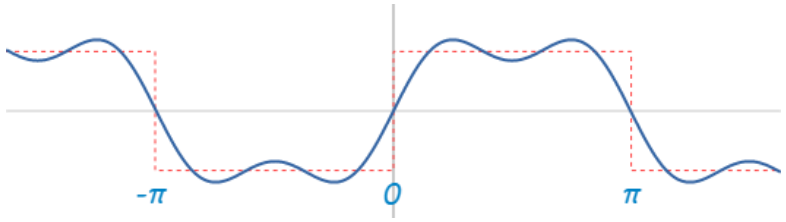

sin(3x)/3

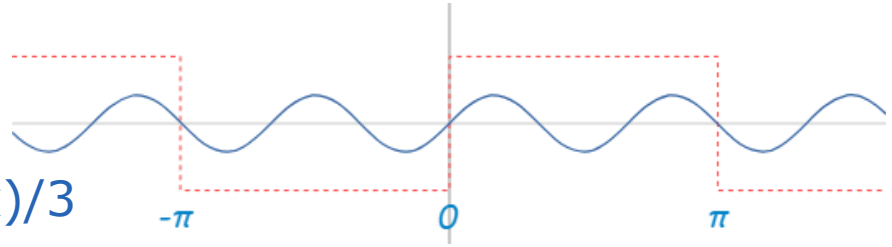

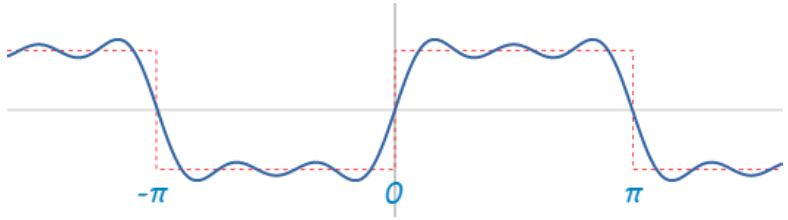

sin(5x)/5

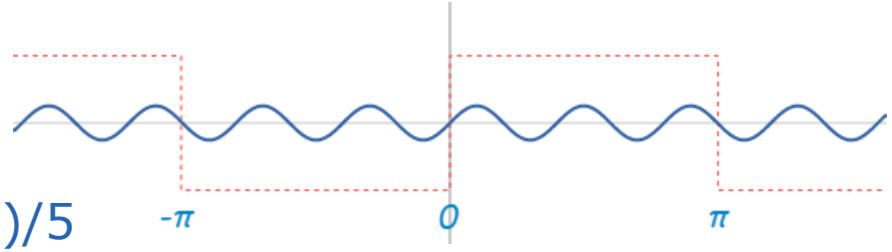

a square wave = sin(x) + sin(3x)/3 + sin(5x)/5 + … (infinitely)

That is the idea of a Fourier series. By adding infinite sine (and or cosine) waves we can make other functions, even if they are a bit weird.

Sinusoidal input and Lead and Lag

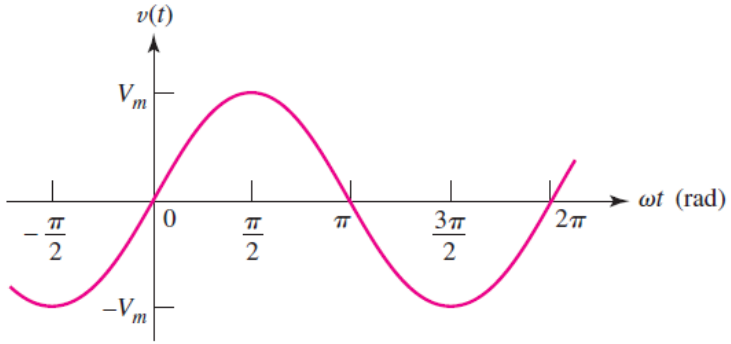

$v_r(t) = V_0 \sin(\omega t)$

$v(t) = V_0 \sin(\omega t + \theta)$ with a phase θ

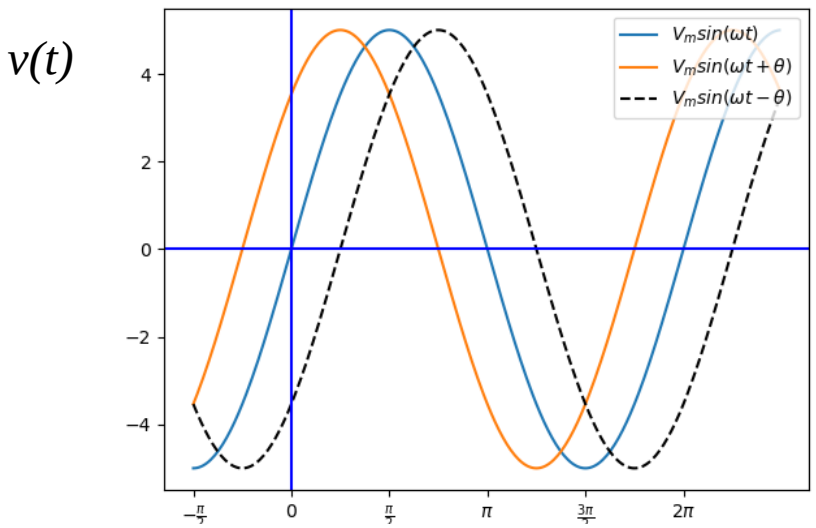

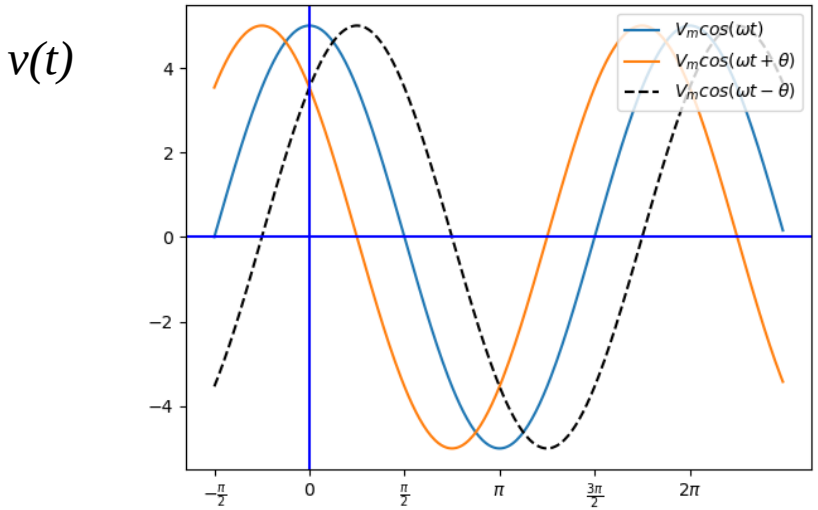

If θ is positive, the voltage v(t) attains its zero value earlier than $v_r(t)$. Here, v(t) is said lead $v_r(t)$. If θ is negative, the opposite situation arises and v(t) is said to lag $v_r(t)$.

Average and RMS Values

- The most common types of measurements are the average (or DC) value of a signal waveform—which corresponds to just measuring the mean voltage or current over a period of time—and the root-mean-square (or rms) value, which takes into account the fluctuations of the signal about its average value.
- The operation of computing the average value of a signal corresponds to integrating the signal waveform over some (presumably, suitably chosen) period of time. We define the time-averaged value of a signal x(t) as

$$\textbf{Average of } \boldsymbol{x(t)} = < \boldsymbol{x(t)} > = \frac{\mathbf{1}}{\boldsymbol{T}} \int_{\mathbf{0}}^{\boldsymbol{T}} \boldsymbol{x(t')}\, \boldsymbol{dt'}, \quad \text{where } T \text{ is period of signal}$$

- A useful measure of the voltage of an AC waveform is the **Effective or root-mean-square, or rms, value of the signal, x(t), defined as follows:**

$$x_{rms} = \sqrt{\frac{1}{T}\int_0^T x^2(t)\, dt'}$$

$$\text{So, } I_{rms} = \sqrt{\frac{1}{T}\int_0^T i^2(t)\, dt'}$$

The average power in a resistance R for a periodic current i(t) of period T is

$$P = \frac{1}{T}\int_0^T Ri^2(t)dt = I_{\text{rms}}^2 R,$$

The effective or rms current may be defined as the constant current which will produce the same power in a resistor as that produced on the average by the actual periodic current

Average and RMS Values

- Compute the rms value of the sinusoidal current $i(t) = I_0 sin(\omega t)$

$$I_{\text{rms}}^2 = I_{\text{eff}}^2 = \frac{I_0^2}{T}\int_0^T \sin^2 \omega t dt$$

$$= \frac{I_0^2}{\omega T}\int_0^{2\pi} \sin^2 \omega t d(\omega t) = \frac{I_0^2}{2\pi}\int_0^{2\pi} \frac{1-\cos 2\omega t}{2} d(\omega t) = \frac{I_0^2}{2}$$

$$I_{\text{rms}} = \frac{I_0}{\sqrt{2}} = 0.707 I_0.$$

Root Mean Squared

Root Square

$$V_{RMS} \equiv \sqrt{\left(V^2\right)_{avg}} = \frac{1}{\sqrt{2}} V_p = 0.707 V_1$$

Mean

- Similarly for voltage $v(t) = V_0 sin(\omega t)$, we can show

$$V_{\text{rms}} = \frac{V_0}{\sqrt{2}} = 0.707 V_0$$

- When the rms voltage, measured by voltmeter, is 100 V and the voltage is sinusoidal, the time varying voltage is given by $\text{v(t)} = 100\sqrt{2}\sin(wt)$

Question: why is the shock from the AC mains of 220 V (rms) is more severe than the shock from the 220 V DC mains?

Average and RMS Values

The average value of a sinusoidal voltage or current over a full cycle is zero. However, over a half cycle the average will not be zero. This average for a current $i(t) = I_0 sin(\omega t)$ is given by

$$I_{av} = \frac{2}{T}\int_0^{T/2} I_0 \sin \omega t dt = \frac{2}{\omega T}\int_0^{\pi} I_0 \sin \omega t d(\omega t)$$
$$= \frac{2I_0}{2\pi}\cos \omega t\Big|_{\omega t=\pi}^{0} = \frac{2I_0}{\pi} = 0.637\ I_0.$$

Form Factor: The ratio of the rms value to the average value over a half cycle period is defined to be the form factor of the periodic waveform . For a sinusoidal current, form factor is

$$\text{Form factor} = \frac{I_0}{\sqrt{2}} \Big/ \frac{2I_0}{\pi} = 1.11$$

homeowork: Identify the type of waveforms shown in Fig. P.1. Compute the average and rms values of these waveforms:

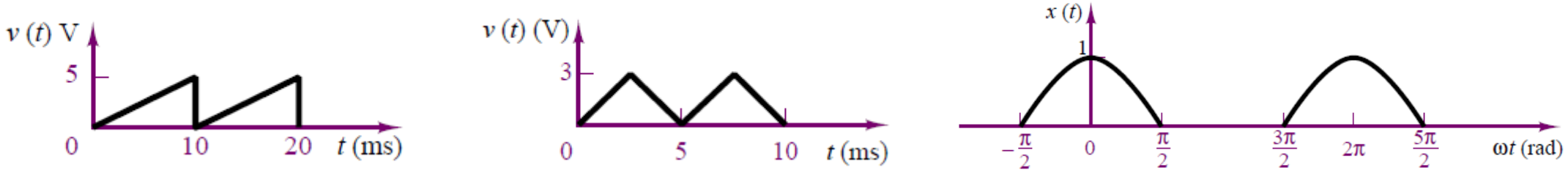

Fig. P.1

Power in AC circuits

Suppose $\boldsymbol{v(t) = V_0 sin(\omega t)}$ is the applied voltage, and the corresponding current is $\boldsymbol{i(t) = I_0 sin(\omega t - \theta)}$

The instantaneous power is
$$p(t) = v(t)i(t) = V_0 I_0 \sin\omega t \sin(\omega t - \theta)$$
$$= \frac{V_0 I_0}{2}[\cos\theta - \cos(2\omega t - \theta)].$$

The average power over a time period T is

$$P = \int_0^T p(t)dt \Big/ \int_0^T dt, \longrightarrow P = \frac{V_0 I_0}{2}\cos\theta = \frac{V_0}{\sqrt{2}}\frac{I_0}{\sqrt{2}}\cos\theta = V_{\text{rms}} I_{\text{rms}} \cos\theta$$

Note:
integral of $\cos(2\omega t - \theta)$ = 0 for a complete cycle

- The term $\cos\theta$ is called "***power factor***". The product $V_{rms}I_{rms}$ is known as "***apparent power***".

- **Real power = apparent power × power factor**

- Since, $cos\theta \leq 1$, the power dissipation in a AC circuit is less than the product $V_{rms}I_{rms}$ except when $cos\theta = 1$
- For $cos\theta = 1$, both current and voltage are in same phase and we have resonance. Unity factor (i.e. $cos\theta = 1$) and resonance are thus synonymous.
- P = 0 for $\theta = \frac{\pi}{2}$. Current is then called ***wattless.*** This case occurs when the circuit is purely inductive or purely capacitive.

ECE 113- Basic Electronics

Lecture week 9: AC response in circuits

Dr. Ram Krishna Ghosh, Assistant Professor

Office: B601, Research and Development Block

Email: rkghosh@iiitd.ac.in

INDRAPRASTHA INSTITUTE *of*
INFORMATION TECHNOLOGY
DELHI

AC response of a resistance

Suppose $\boldsymbol{v(t) = V_0 \sin(\omega t)}$ is the applied across a resistance R, from Ohm's Law, instantaneous current will be

$$i(t) = \frac{v(t)}{R} = \frac{V_0}{R}\sin\omega t$$

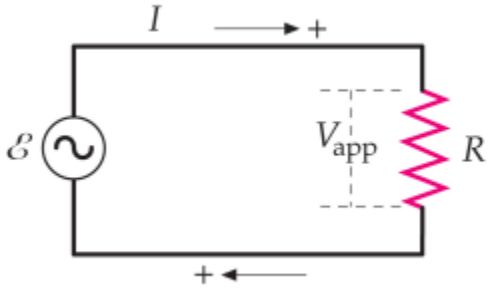

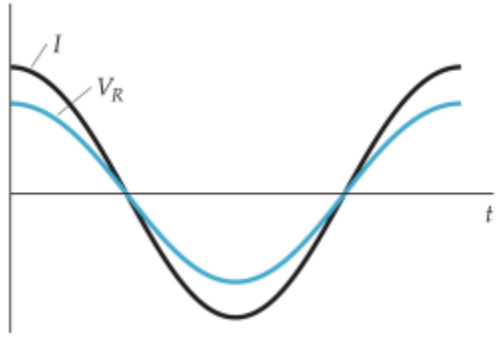

Current and voltage both are in same frequency and phase. The amplitude of current is $I_0 = V_0/R$

The instantaneous power is $$p(t) = v(t)i(t) = \frac{V_0^2}{R}\sin^2\omega t = \frac{V_0^2}{2R}(1 - \cos 2\omega t)$$

The average power over a time period T is $$P = \frac{\int_0^T p(t)dt}{\int_0^T dt} = \frac{V_0^2}{2R} = \frac{I_0^2 R}{2}$$

If *W(t)* is the instantaneous energy, then we have *p(t) = dW/dt*. Then the energy supplied to the resistance in N complete cycle is

$$W_N = \int_0^{NT} p(t)dt = \frac{V_0^2}{2R}NT$$

This energy is dissipated as Joule heat

AC response of a inductance

If ***i(t)* = *I₀sin(ωt)***, then $v(t) = L\frac{di}{dt} = L\frac{d}{dt}(I_0 \sin \omega t) = \omega L I_0 \cos \omega t$

$$= \omega L I_0 \sin\left(\omega t + \frac{\pi}{2}\right).$$

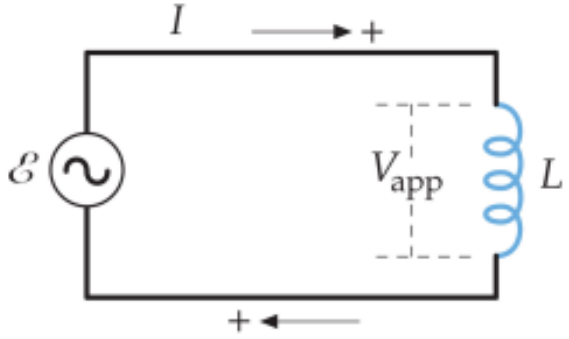

- Voltage *v(t)* across an inductance leads the current *i(t)* by 90°. When the phase difference between two quantities is 90°, they are said to be ***quadrature***.
- The peak value of voltage is $V_0 = \omega L I_0$ *or* $I_0 = V_0/\omega L$. The quantity ωL is called ***inductive reactance***. The unit of ωL is ohm. The inverse of inductive reactance i.e. $1/\omega L$ is known as ***inductive susceptance***.

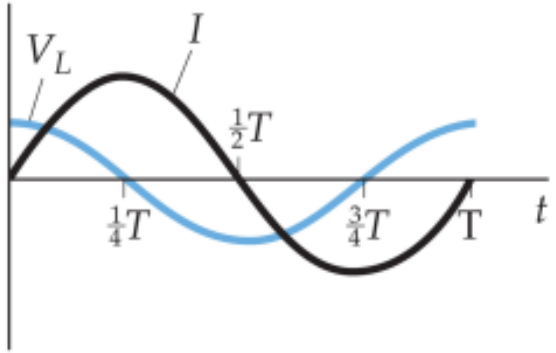

The instantaneous power is $p(t) = v(t)i(t) = \omega L I_0^2 \sin \omega t \cos \omega t = \frac{1}{2} I_0^2 \omega L \sin 2\omega t$

The energy input to the inductor in a time interval t_1 is $W = \int_0^{t_1} p(t)dt = \frac{\omega L I_0^2}{2} \int_0^{t_1} \sin 2\omega t dt = \frac{\omega L I_0^2}{4}(1 - \cos 2\omega t_1)$

The average power over a full time period T is 0 since integral of sin(ωt) ; inductor doesn't dissipate energy, the store energy

AC response of a capacitance

If $v(t) = V_0 \sin(\omega t)$ is applied across a capacitor, then the instantaneous current is

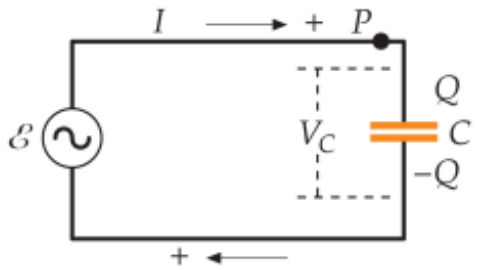

$$i(t) = \frac{dq}{dt} = C\frac{dv}{dt} = C\frac{d}{dt}(V_0 \sin \omega t)$$
$$= \omega C V_0 \cos \omega t = \omega C V_0 \sin\left(\omega t + \frac{\pi}{2}\right)$$

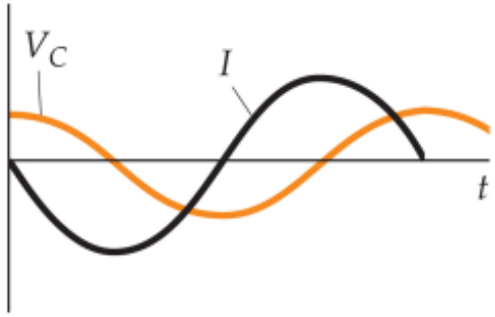

- Current $i(t)$ across leads the voltage $v(t)$ by 90°. When the phase difference between two quantities is 90°, they are said to be ***quadrature***.
- The peak value of voltage is $I_0 = \omega C V_0$ or $V_0 = I_0/\omega C$. The quantity $1/\omega C$ is called ***capacitive reactance***. The unit of ωL is ohm. The inverse of inductive reactance i.e. ωC is known as ***capacitive susceptance***.

The instantaneous power is

$$p(t) = v(t)i(t) = \omega C V_0^2 \sin \omega t \cos \omega t$$
$$= \frac{\omega C V_0^2}{2} \sin 2\omega t.$$

The energy supplied from then souce in a time interval t_1 is

$$W = \int_0^{t_1} p(t)dt = \frac{\omega C V_0^2}{2} \int_0^{t_1} \sin 2\omega t dt$$
$$= \frac{1}{4} C V_0^2 (1 - \cos 2\omega t_1).$$

The average power over a full time period T is 0 since integral of sin(ωt) ; capacitor doesn't dissipate energy, the store energy

SOLUTION OF CIRCUITS CONTAINING DYNAMIC ELEMENTS

Consider the circuit of Fig. 4, which consists of the series connection of a voltage source, a resistor, and a capacitor. Applying KVL around the loop, we obtain the following equation:

$$v_S(t) = v_R(t) + v_C(t)$$

and we get $$\frac{dv_C}{dt} + \frac{1}{RC} v_C = \frac{1}{RC} v_S$$

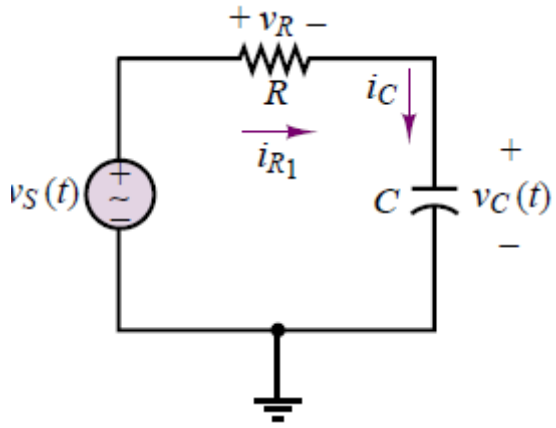

Fig. 4

Let external source be a sinusoidal voltage, described by the expression

$$v_S(t) = V \cos(\omega t)$$

Since the forcing function is a sinusoid, the solution may also be assumed to be of the same form. An expression for $v_C(t)$ is then the following:

$$v_C(t) = A \sin \omega t + B \cos \omega t$$

which is equivalent to $$v_C(t) = C \cos(\omega t + \varphi)$$

SOLUTION OF CIRCUITS CONTAINING DYNAMIC ELEMENTS

Substituting this value of in the differential equation for $v_C(t)$ and solving for the coefficients A and B yields the expression

$$A\omega \cos \omega t - B\omega \sin \omega t + 1/(RC)\,(A \sin \omega t + B \cos \omega t) = (1/RC)\,V \cos \omega t$$

A and B are given as following:

$$A = \frac{V\omega RC}{1+\omega^2(RC)^2} \quad \text{and} \quad B = \frac{V}{1+\omega^2(RC)^2}$$

And the solution for $v_C(t)$ may be written as follows

$$v_C(t) = \frac{V\omega RC}{1+\omega^2(RC)^2}\sin \omega t + \frac{V}{1+\omega^2(RC)^2}\cos \omega t$$

This response is plotted in Fig. 5.

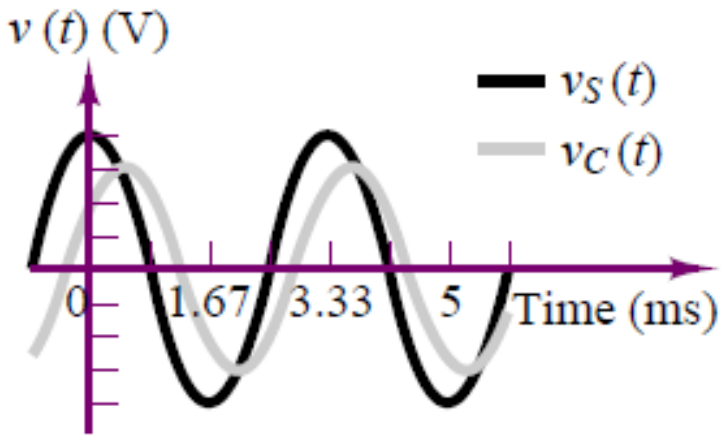

Fig. 5

We shall use an efficient notation to make it possible to represent sinusoidal signals as *complex numbers*, and to eliminate the need for solving differential equations.

Phasor and Impedance

- A complex numbers can be used to represent sinusoidal signals by using Euler's equation. We have:

$$A\cos(\omega t + \varphi) = \mathrm{Re}\,[Ae^{j(\omega t+\varphi)}]$$

$$e^{j(\omega t)} = \cos\omega t + j\sin\omega t$$

- This equality is easily verified by expanding the right-hand side, as follows:

$$\mathrm{Re}\,[Ae^{j(\omega t+\varphi)}] = \mathrm{Re}\,[A\cos(\omega t + \varphi) + jA\sin(\omega t + \varphi)] = A\cos(\omega t + \varphi)$$

- It is possible to express a generalized sinusoid as the real part of a complex vector whose **angle,** is given by (ωt + φ) and whose **magnitude,** is equal to the peak amplitude of the sinusoid.
- Similarly, $\mathrm{Im}\,[Ae^{j(\omega t+\varphi)}] = A\sin(\omega t + \varphi)$
- The **complex phasor** corresponding to the sinusoidal signal $A\cos(\omega t + \varphi)$ is therefore defined to be the complex number $Ae^{j\varphi}$:

$$Ae^{j\varphi} = \text{complex phasor notation for } A\cos(\omega t + \varphi) = A\angle\varphi$$

- Any sinusoidal signal may be mathematically represented in one of two ways:
  - a **time-domain form,** $v(t) = A\cos(\omega t + \varphi)$
  - and a **frequency-domain** (or **phasor**) **form,** $\mathbf{V}(j\omega) = Ae^{j\varphi}$
  - $j\omega$ in the notation $\mathbf{V}(j\omega)$, indicating the $e^{j\varphi}$ dependence of the phasor.

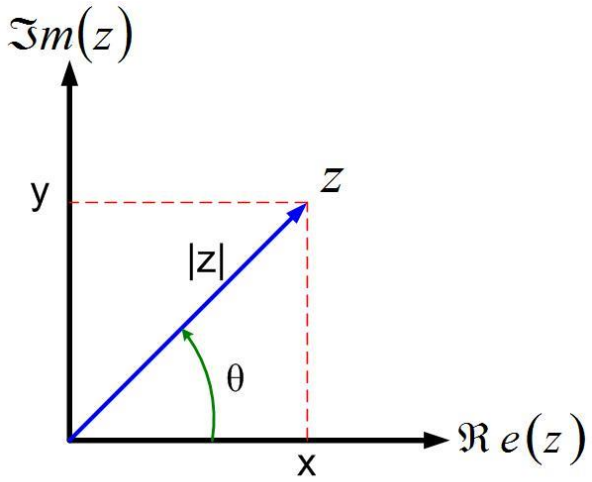

Phasor diagram

Phasor Diagram is a graphical representation of the relation between two or more alternating quantities in terms of magnitude and direction. In other words, it depicts the phase relationship between two or more sinusoidal waveforms having the same frequency.

Phasor is a straight line with an arrow at one end, rotating in an anticlockwise direction. The length of the line represents the magnitude of the sinusoidal quantity and the arrow represents the direction.

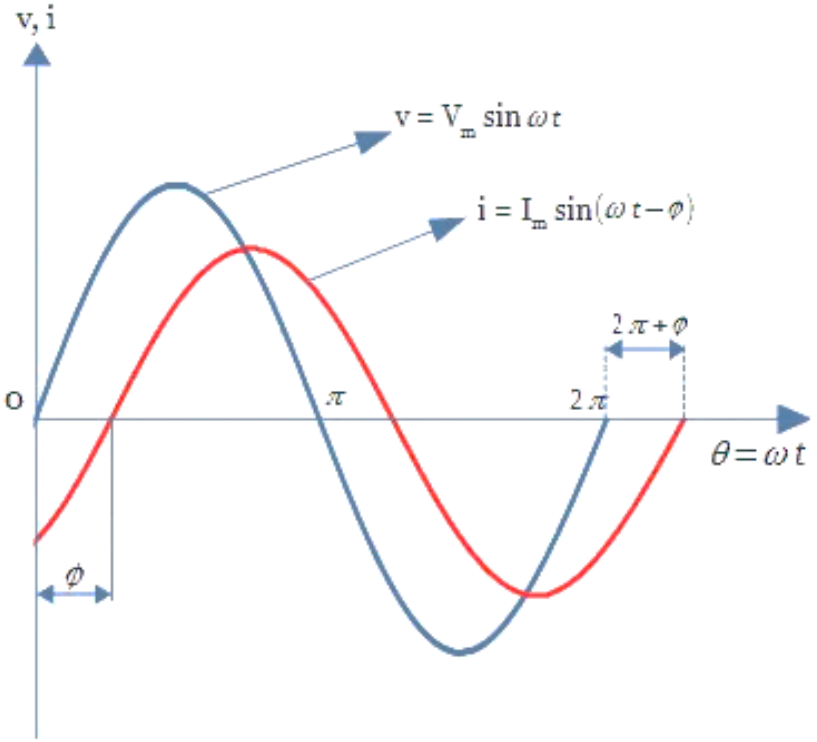

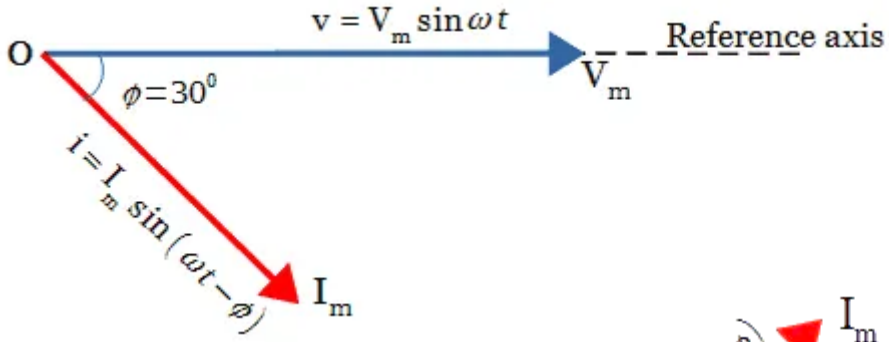

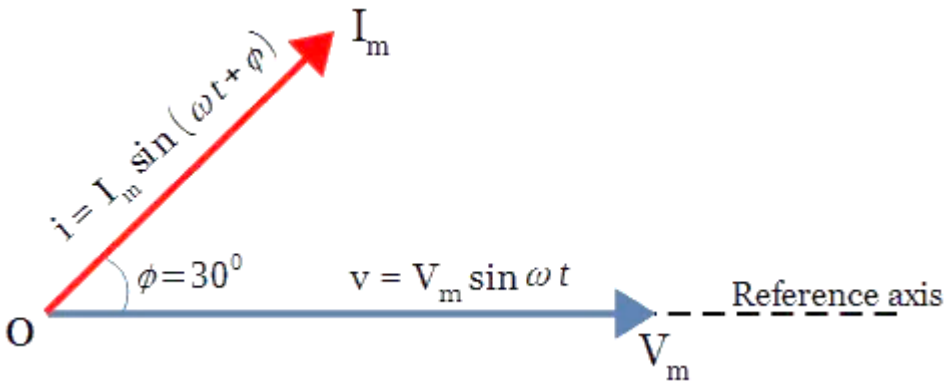

Phasor diagram

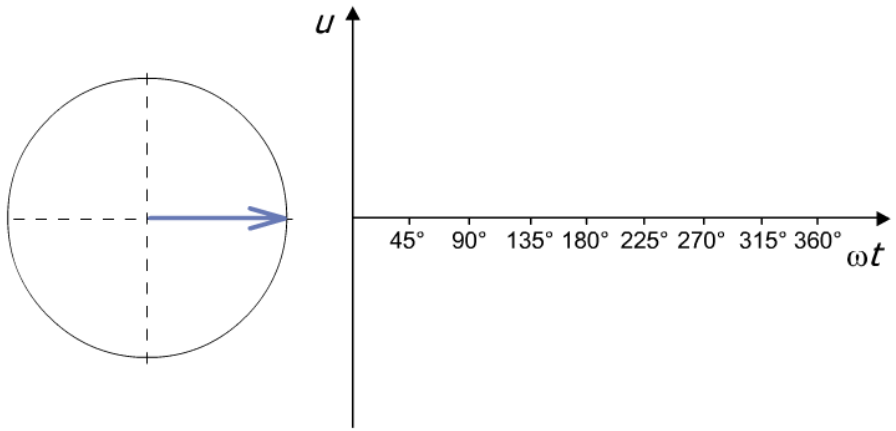

AC response of a resistance

$$v = v_m \sin \omega t$$

$$i = i_m \sin \omega t$$

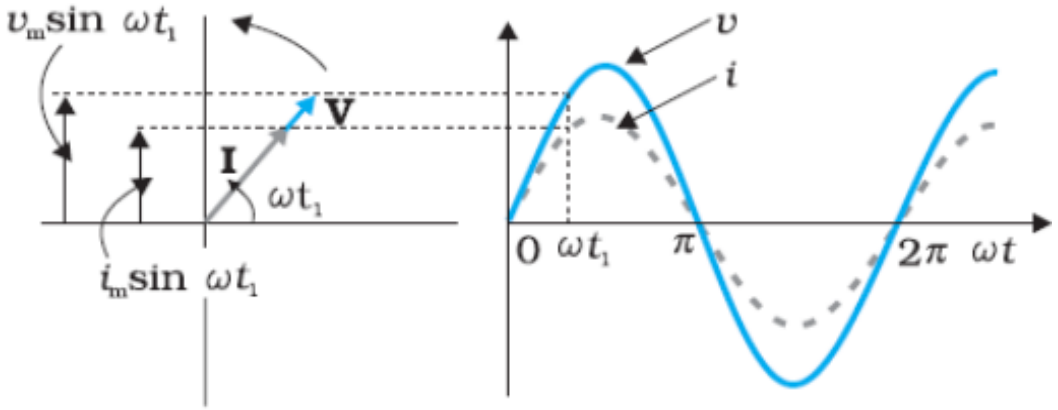

AC response of a inductance

$$v = v_m \sin \omega t$$

$$i = i_m \sin\left(\omega t - \frac{\pi}{2}\right)$$

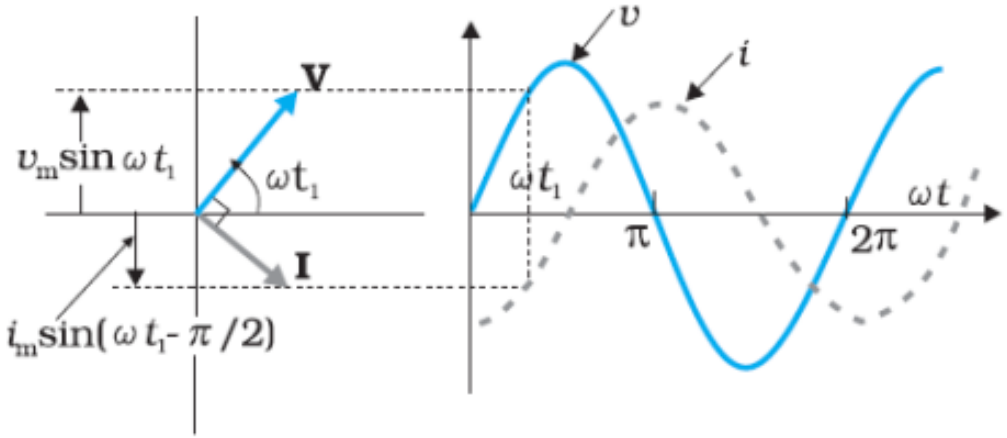

Phasor diagram voltage versus current graph

Phasor

AC response of a capacitance

$$v = v_m \sin \omega t$$

$$i = i_m \sin\left(\omega t + \frac{\pi}{2}\right)$$

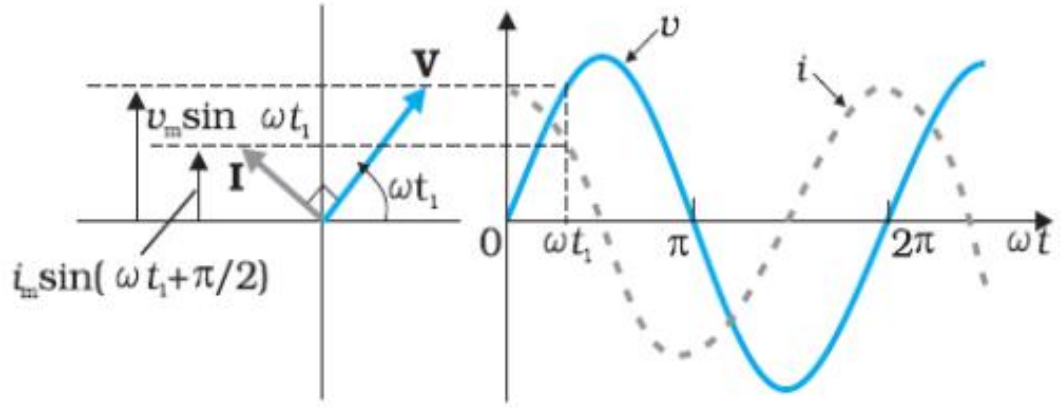

Phasor diagram voltage versus current graph

Suppose, we have a complex number (i.e. phasor) $z_1 = |z_1|e^{j\theta} = |z_1|\angle\theta$

And another phasor $z_2 = z_1 e^{j\varphi} = |z_1|e^{j(\theta+\varphi)} = |z_1|e^{j\theta}e^{j\varphi}$ i.e. z_2 is leading z_1

If $\varphi = \frac{\pi}{2}$, then $z_2 = jz_1$,

since, $e^{j\frac{\pi}{2}} = \cos\frac{\pi}{2} + j\sin\frac{\pi}{2} = j$

Clearly, multiplication by *j* means advancement of phase by $\frac{\pi}{2}$ or 90°

If $\varphi = -\frac{\pi}{2}$, then $z_2 = -jz_1 = \frac{1}{j}z_1$ multiplication by -*j* means lagging of phase by $\frac{\pi}{2}$ or 90°

Phasor and Impedance

- Express following voltages as phasors:

$$v1(t) = 15\cos(377t + \pi/4)\ \text{V}$$

$$v2(t) = 15\cos(377t + \pi/12)\ \text{V}$$

The phasors will be following:

$$\mathbf{V}_1(j\omega) = 15\angle\pi/4\ \text{V}$$

$$\mathbf{V}_2(j\omega) = 15e^{j\,\pi/12} = 15\angle\pi/12\ \text{V}$$

- Converting the phasor voltages from polar to rectangular, we get

$$\mathbf{V}1(j\omega) = 10.61 + j10.61\ \text{V}$$

$$\mathbf{V}2(j\omega) = 14.49 + j3.88$$

If two sources are connected in series, what will be the combined voltage?

v= v1(t) + v2(t), adding in phasor we get,

$$\mathbf{V}(j\omega) = 25.10 + j14.49\ \text{V} = = 28.98\angle\pi/6\ \text{V}$$

In time domain, we have v(t) = 28.98 $\cos(377t + \pi/6)$ V.

Superposition of AC Signals

- Consider the circuit shown in Fig. 6. Find the load current, if I1(t) and I2(t) are given as following:

$$i1(t) = A1\cos(\omega 1t) \;\; and \;\; i2(t) = A2\cos(\omega 2t)$$

- The load current is equal to the sum of the two source currents; that is,

$$iL(t) = i1(t) + i2(t)$$

or, in phasor form,

$$\boldsymbol{I}L = \boldsymbol{I}1 + \boldsymbol{I}2$$

- writing **I**1 and **I**2 in a more explicit phasor form as

$$\boldsymbol{I_1} = A_1 e^{j0} \text{ and } \boldsymbol{I_2} = A_2 e^{j0}.$$

- The load current $iL(t) = i1(t) + i2(t) = A1\cos(\omega 1t) + A2\cos(\omega 2t)$

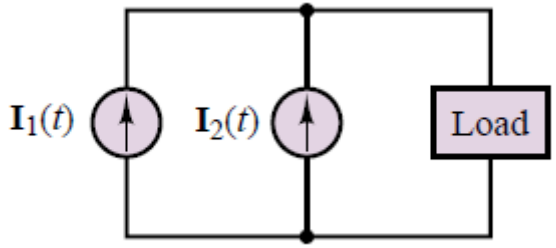

Fig. 6

Example of AC Superposition

- Compute the voltages $v_{R1}(t)$ and $v_{R2}(t)$ in the circuit of Figure 7. Given

  $i_S(t) = 0.5\cos(2\pi 100t)$ A

  $v_S(t) = 20\cos(2\pi 1{,}000t)$ V

- Since the two sources are at different frequencies, we must compute a separate solution for each. Consider the current source first, with the voltage source set to zero (short circuit) as shown in Figure 8. The circuit thus obtained is a simple current divider. Writing the source current in phasor notation:

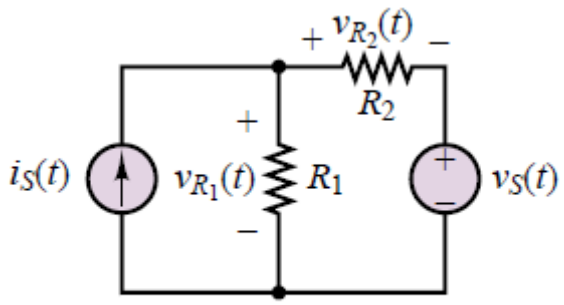

$R_1 = 150\ \Omega$, $R_2 = 50\ \Omega$

Figure 7

$$I_S(j\omega) = 0.5e^{j0} = 0.5\angle 0 \text{ A} \qquad \omega = 2\pi\, 100\angle \text{rad/s}$$

$$\mathbf{V}_{R1}(\mathbf{I}_S) = \mathbf{I}_S \frac{R_2}{R_1 + R_2} R_1 = 0.5\ \angle 0 \left(\frac{50}{150 + 50}\right) 150 = 18.75\ \angle 0 \text{ V}$$

$$\omega = 2\pi\, 100 \text{ rad/s}$$

$$\mathbf{V}_{R2}(\mathbf{I}_S) = \mathbf{I}_S \frac{R_1}{R_1 + R_2} R_2 = 0.5\ \angle 0 \left(\frac{150}{150 + 50}\right) 50 = 18.75\ \angle 0 \text{ V}$$

$$\omega = 2\pi\, 100 \text{ rad/s}$$

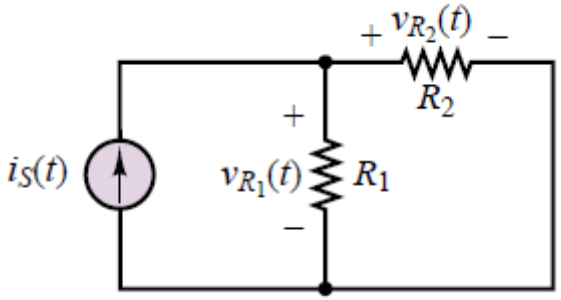

Figure 8

Example of AC Superposition (cont.)

- Next, we consider the voltage source, with the current source set to zero (open circuit), as shown in Figure 9. We first write the source voltage in phasor notation: *is (t)* = 0.5 cos*(*2*π*100*t)* A

$$\mathbf{V}_S(j\omega) = 20e^{j0} = 20\angle 0 \text{ V} \qquad \omega = 2\pi\, 1{,}000 \text{ rad/s}$$

$$\mathbf{V}_{R1}(\mathbf{V}_S) = \mathbf{V}_S \frac{R_1}{R_1 + R_2} = 20\angle 0 \left(\frac{150}{150 + 50}\right) = 15\ \angle 0 \text{ V}$$

$$\omega = 2\pi\, 1{,}000 \text{ rad/s}$$

$$\mathbf{V}_{R2}(\mathbf{V}_S) = -\mathbf{V}_S \frac{R_2}{R_1 + R_2} = -20\angle 0 \left(\frac{50}{150 + 50}\right) = -5\angle 0 = 5\angle \pi \text{ V}$$

$$\omega = 2\pi\, 1{,}000 \text{ rad/s}$$

$$\mathbf{V}_{R1} = \mathbf{V}_{R1}(\mathbf{I}_S) + \mathbf{V}_{R1}(\mathbf{V}_S)$$

$$v_{R1}(t) = 18.75\ \cos(2\pi\, 100t) + 15\ \cos(2\pi\, 1{,}000t) \text{ V}$$

$$\mathbf{V}_{R2} = \mathbf{V}_{R2}(\mathbf{I}_S) + \mathbf{V}_{R2}(\mathbf{V}_S)$$

$$v_{R2}(t) = 18.75\ \cos(2\pi\, 100t) + 5\ \cos(2\pi\, 1{,}000t + \pi) \text{ V}.$$

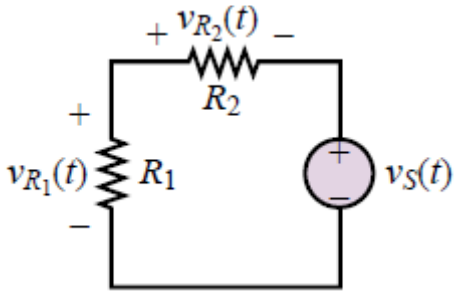

Figure 9

Impedance

- We will consider the *i-v* relationship of the three ideal circuit elements (R, L and C) in light of the new phasor notation.
- The result will be a new formulation in which resistors, capacitors, and inductors will be described in the same notation.
- A direct consequence of this result will be that the circuit theorems discussed earlier will be extended to AC circuits.
- In the context of AC circuits, any one of the three ideal circuit elements defined so far will be described by a parameter called **impedance,** which may be viewed as a *complex resistance*.
- The impedance concept is equivalent to stating that capacitors and inductors act as *frequency-dependent resistors*, that is, as resistors whose resistance is a function of the frequency of the sinusoidal excitation.
- Figure 10 shows the conventional circuit representation.

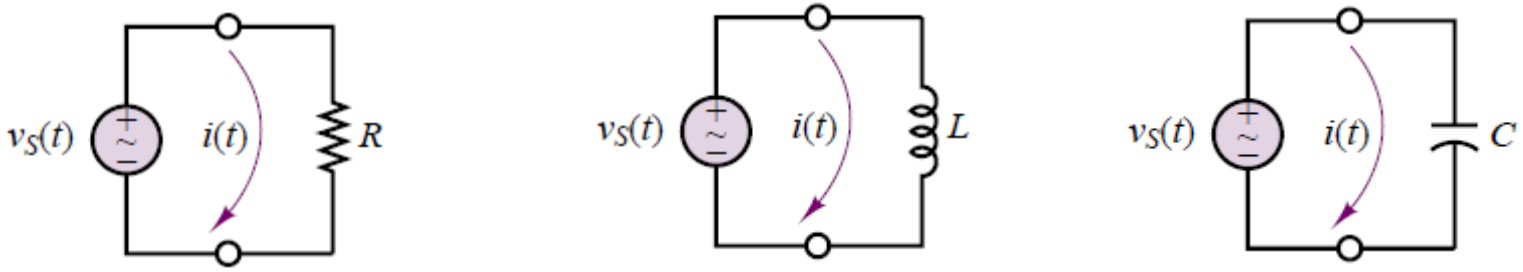

Conventional form Representation

Figure 10

Impedance

- The phasor-impedance form representation in shown in Figure 11 in which the representation explicitly shows phasor voltages and currents and treats the circuit element as a generalized "impedance."
- R, L and C circuit elements will be represented as one such impedance element.
- Let the source voltage in the circuit of Figure 11 be defined by
    - $v_S(t) = A\cos \omega t$ or $\mathbf{V}_S(j\omega) = Ae^{j0} = A\angle 0$
- Then the current *i(t)* is defined by the *i-v* relationship for each circuit element. Let us examine the frequency-dependent properties of the resistor, inductor, and capacitor, one at a time.

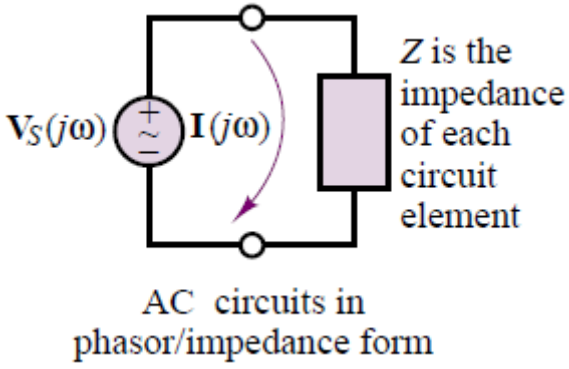

phasor-impedance form

Figure 11

Impedance

The Resistance

If a voltage $v_S(t) = A \cos \omega t$ is applied across a resistance R resulting in a current $i(t)$, then $i(t)$ is given as follow:

$$i(t) = \frac{v_S(t)}{R} = \frac{A}{R}\cos(\omega t)$$

In phasor form we have,

$$\mathbf{V}_S(j\omega) = A\angle 0$$

$$\mathbf{I}(j\omega) = \frac{A}{R}\angle 0$$

$$Z_R(j\omega) = \frac{\mathbf{V}_S(j\omega)}{\mathbf{I}(j\omega)} = R \qquad \text{Impedance of a resistor}$$

Finally, the *impedance* of the resistor is defined as the ratio of the phasor voltage across the resistor to the phasor current flowing through it, and the symbol Z_R

Impedance

The Inductance

If a voltage *vS (t)* = *A* cos *ωt* is applied across the inductor L, then *iL(t)* is given as

$$i_L(t) = i(t) = \frac{1}{L}\int v_S(t')dt' = \frac{1}{L}\int A\cos(\omega t')dt' = \frac{A}{\omega L}\sin \omega t$$

We find dependence on the radian frequency of the source on the expression for the inductor current.

Further, the inductor current is shifted in phase (by 90◦) with respect to the voltage. This fact can be seen by writing the inductor voltage and current in time-domain form:

$$v_S(t) = v_L(t) = A\cos \omega t \quad \text{and} \quad i(t) = i_L(t) = \frac{A}{\omega L}\cos(\omega t - \pi/2)$$

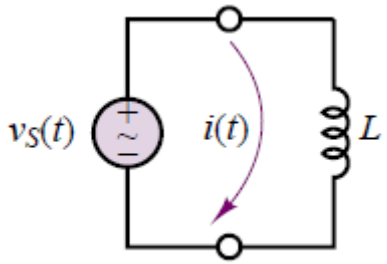

Using phasor notation,

$$v_S(j\omega) = A\angle 0^0 \quad \text{and} \quad I(j\omega) = \frac{A}{\omega L}\angle -{}^{\pi}/_{2}$$

Finally, the *impedance* of the inductor is given

$$Z_L(j\omega) = \frac{v_S(j\omega)}{I(j\omega)} = \omega L\angle {}^{\pi}/_{2} = j\omega L \qquad \text{Impedance of Inductor}$$

The inductor appears to behave like a *complex frequency-dependent resistor,* and that the magnitude of this complex resistor, *ωL*, is proportional to the signal frequency, *ω*.

Impedance

The Capacitor

If a voltage *vS (t)* = *A* cos *ωt* is applied across the capacitor C, the capacitor voltage $v_c(t) = v_S(t)$ then $i_C(t)$ is given as

$$i_C(t) = C\frac{dv_C}{dt} = \mathrm{C}\,\frac{d}{dt}(A\cos\omega t) = -C\,(A\omega\sin\omega t) = \omega C\,A\cos(\omega + {}^{\pi}/_{2})$$

We find dependence on the radian frequency of the source on the expression for the capacitor current.

In phasor form,

$$v_S(j\omega) = A\angle 0^0 \qquad \text{and} \quad I(j\omega) = \omega C\,A\angle {}^{\pi}/_{2}$$

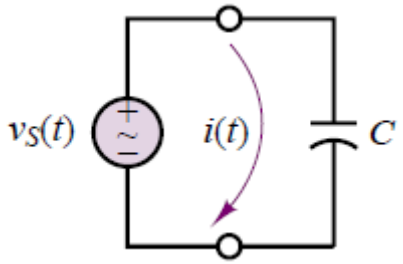

Finally, the *impedance* of the capacitor $Z_C(j\omega)$is defined as

$$Z_C(j\omega) = \frac{v_S(j\omega)}{I(j\omega)} = \frac{1}{\omega C}\angle -{}^{\pi}/_{2} = \frac{-j}{\omega C} = \frac{1}{j\omega C} \qquad \text{Impedance of a capacitor}$$

The impedance of a capacitor is also a frequency-dependent complex quantity, with the impedance of the capacitor varying as an inverse function of frequency;

Sinusoidal voltage applied to a series RL circuit

The KVL eq. for the circuit is $v_R(t)+v_L(t) = v(t), \quad \text{or,} \quad Ri+L\frac{di}{dt} = v(t)$

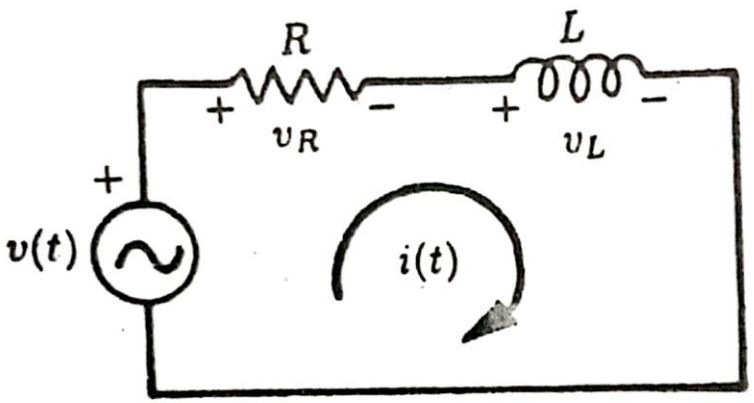

Fig.15.10. Alternating voltage applied to a series *RL* circuit

If $v(t) = V_0\cos(\omega t)$, i_r is the corresponding soln. of the current, then

$$Ri_r + L\frac{di_r}{dt} = V_0 \cos \omega t \qquad (1)$$

If $v(t) = V_0\sin(\omega t)$, i_i is the corresponding soln. of the current, then

$$Ri_i + L\frac{di_i}{dt} = V_0 \sin \omega t \qquad (2)$$

Multiplying (2) by *j*, adding to eq. (1) and putting $i = i_r + ji_i$ we can write

$$Ri + L\frac{di}{dt} = V_0 e^{j\omega t} \qquad (3)$$

where we have used $e^{j(\omega t)} = \cos\omega t + j\sin\omega t$

Contd..

In steady state, then current will follow the voltage. Therefore, the steady state current is given by $i(t) = Ae^{j(\omega t)}$ where *A* is a complex quantity.

Therefore, from eq. (3), we can get, $(R + j\omega L)A = V_0$ (4) This doesn't involve *t*.

Note that, the use of complex number converts the original differential equation into a algebraic equation. This is the advantage of using complex number in AC circuit analysis.

Eq. (4) gives, $$A = \frac{V_0}{R + j\omega L} = \frac{V_0}{Z} \quad (5)$$

where $Z(= R + j\omega L)$ is called the **impedance of the circuit**. The impedance has the magnitude $|Z| = \sqrt{R^2 + \omega^2 L^2}$ and the angle θ, where $\tan\theta = \omega L/R$

Thus, $$Z = R + j\omega L = |Z|e^{j\theta} \quad (6)$$

The reciprocal of *Z* is called the **admittance** *Y*,

$$Y = \frac{1}{Z} = \frac{1}{R + j\omega L} \quad (7)$$

The unit of the impedance is ohm while that of the admittance is mho or siemens

The current is given by,

$$i = i_r + ji_i = Ae^{j\omega t} = \frac{V_0}{Z}e^{j\omega t} = \frac{V_0}{|Z|}e^{j(\omega t - \theta)} \quad (8)$$

Contd..

If $v(t) = V_0\cos(\omega t) = \mathrm{Re}(V_0 e^{j\omega t})$, the physical solution i_r is obtained by taking the real part of eq. (8), i.e.

$$i_r = \frac{V_0}{|Z|}\cos(\omega t - \theta) \qquad (9)$$

If $v(t) = V_0\sin(\omega t) = \mathrm{Im}(V_0 e^{j\omega t})$, the physical solution i_i is obtained by taking the imaginary part of eq. (8), i.e.

$$i_i = \frac{V_0}{|Z|}\sin(\omega t - \theta) \qquad (10)$$

Putting $I_0 = V_0/|Z|$, we can write from eq. (5) and (6 and (8) as

$$I_0 e^{-j\theta} = \frac{V_0}{|Z|} \Rightarrow I_0 = \frac{V_0}{|Z|e^{j\theta}} \qquad (11)$$

Writing in terms of rms voltage and current, ($V = V_0/\sqrt{2}$; $I = I_0/\sqrt{2}$)

$$\frac{|V|e^{j0}}{|Z|e^{j\theta}} = |I|e^{-j\theta}, \quad \text{or,} \quad \frac{V}{Z} = I \qquad (12)$$

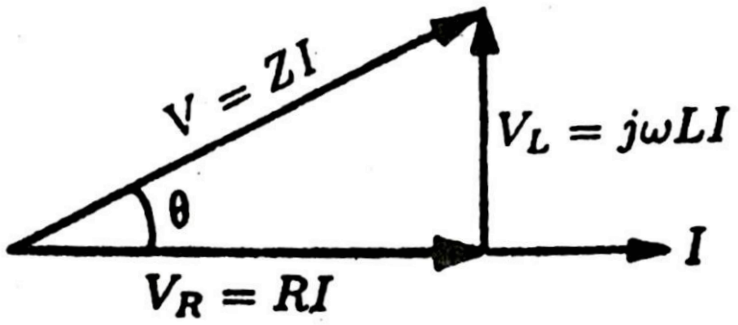

Fig.15.11. Phasor diagram for voltage in series *RL* circuit

V, *Z* and *I* all are complex number. The angle for *V* is taken as 0, since it is the reference phasor in this case.

Eq. (12) is a phasor equation representing a generalized Ohm's law

In eq. (12), we can write $V = (R+j\omega L)I = V_R+V_L$ where V_R (=RI) is the phasor for the voltage across R and V_L (=$j\omega LI$) is the phasor for the voltage across L. V_R is in phase with current I while V_L leads the current phasor by 90°. The phasor sum of V_R and V_L gives the phasor of the applied voltage V (see the diagram). This shows that V leads I by θ

Sinusoidal voltage applied to a series RC circuit

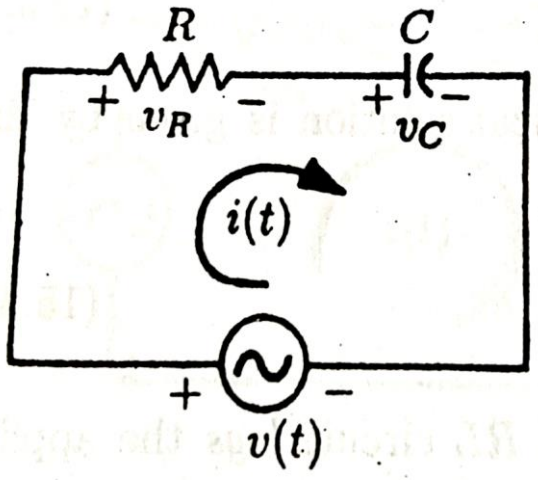

Fig.15.12 Alternating voltage applied to a series *RC* circuit

The KVL eq. for the circuit is $v_R(t) + v_c(t) = v(t)$ or, $Ri + \frac{q}{C} = V_0 e^{j\omega t}$

Using $i = dq/dt$, we get $R\frac{di}{dt} + \frac{1}{C}i = j\omega V_0 e^{j\omega t}$ (1)

The steady state solution of eq. (1) is given by $i(t) = Ae^{j(\omega t)}$ where A is a complex quantity.

putting $i(t)$ in (1), we have $\left(j\omega R + \frac{1}{C}\right) A = j\omega V_0$

$$\text{or,} \quad A = \frac{j\omega V_0}{j\omega R + (1/C)} = \frac{V_0}{R + 1/j\omega C}$$

$$= \frac{V_0}{R - j/(\omega C)} = \frac{V_0}{Z} \qquad (2)$$

where $Z(= R - j/\omega C)$ is the **impedance of the circuit**. The magnitude of the impedance is $|Z| = \sqrt{R^2 + 1/(\omega^2 C^2)}$ and the angle is $-\theta$, where $\tan\theta = 1/\omega CR$. Thus

$$Z = R - \frac{j}{\omega C} = |Z|e^{-j\theta} \qquad (3)$$

Contd..

Using eq. (2) we have the current, $$i(t) = \frac{V_0}{Z}e^{j\omega t} = \frac{V_0}{|Z|}e^{j(\omega t+\theta)} \quad (4)$$

If $\boldsymbol{v(t) = V_0 cos(\omega t) = \mathrm{Re}(V_0 e^{j\omega t})}$, the physical solution of current is (i.e. real part) $$i_r(t) = \frac{V_0}{|Z|}\cos(\omega t + \theta) \quad (5)$$

If $\boldsymbol{v(t) = V_0 sin(\omega t) = \mathrm{Im}(V_0 e^{j\omega t})}$, the physical solution of current is (i.e. imaginary part) $$i_i(t) = \frac{V_0}{|Z|}\sin(\omega t + \theta) \quad (6)$$

It is clear that from (4), (5) and (6) that the current in a series RC circuit leads the applied voltage by the angle θ.

The ***admittance*** in this case is, $$Y = \frac{1}{Z} = \frac{1}{R - j/(\omega C)} \quad (7)$$

Putting the current amplitude $V_0/|Z|$ by I_0, we can write eq. (4) as

$$\frac{V_0}{|Z|}e^{j(\omega t+\theta)} = I_0 e^{j(\omega t+\theta)} \quad \text{or,} \quad \frac{V_0}{|Z|e^{-j\theta}} = I_0 \quad (8)$$

Writing in terms of rms voltage and current, ($V = V_0/\sqrt{2}$; $I = I_0/\sqrt{2}$), eq. (8) can be written as

$$\frac{|V|e^{j0}}{|Z|e^{-j\theta}} = |I| \quad \text{or,} \quad \frac{V}{Z} = I \quad (9)$$

a phasor equation representing a generalized Ohm's law

Contd..

From eq. (9), we have $$V = IZ = I\cdot\left(R - \frac{j}{\omega C}\right) = V_R + V_c \qquad (10)$$

where $V_R = RI$ is the phasor for the voltage across R and $V_C = -jI/\omega C$ is the phasor for the voltage across C. The phasor V_R is in phase with current I while the phasor V_C lags the current phasor I by 90°. The phasor sum of V_R and V_C gives the phasor of the applied voltage V (see the phasor diagram). This is obvious that I leads V leads by θ.

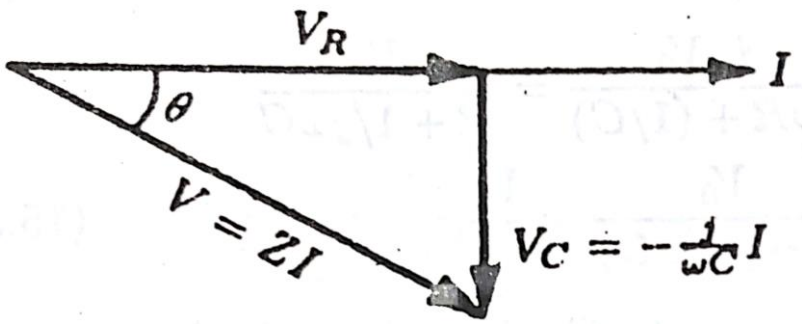

Fig.15.13. Phasor diagram for voltage in a series *RC* circuit

Sinusoidal voltage applied to a series RLC circuit

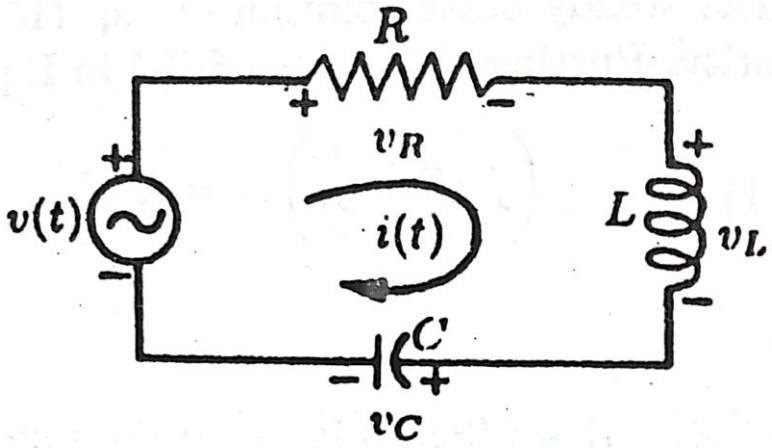

Fig.15.14. Alternating voltage applied to a series *RLC* circuit

The KVL eq. for the circuit is

$$v_R(t) + v_L(t) + v_c(t) = v(t)$$

$$\text{or,} \quad Ri + L\frac{di}{dt} + \frac{q}{C} = V_0 e^{j\omega t}$$

Differentiating w.r.t *t* gives

$$L\frac{d^2 i}{dt^2} + R\frac{di}{dt} + \frac{1}{C}i = j\omega V_0 e^{j\omega t} \qquad (1)$$

In steady state current is given by $i = Ae^{j\omega t}$

Therefore, putting '*i*' in eq. (1) gives

$$\left(-\omega^2 L + j\omega R + \frac{1}{C}\right) A = j\omega V_0 \quad \Rightarrow \quad \left(R + j\omega L + \frac{1}{j\omega C}\right) A = V_0 \qquad (2)$$

Solving eq. (2) for *A*, we obtain for the steady state current

$$i = \frac{V_0 e^{j\omega t}}{R + j\left(\omega L - \frac{1}{\omega C}\right)} \qquad (3)$$

Contd..

The impedance Z is

$$Z = R + j\left(\omega L - \frac{1}{\omega C}\right) = |Z|e^{j\theta} \qquad (4)$$

$$\text{where} \quad |Z| = \sqrt{R^2 + \left(\omega L - \frac{1}{\omega C}\right)^2}$$

$$\text{and} \quad \tan\theta = \left(\omega L - \frac{1}{\omega C}\right)/R = \frac{X}{R} \qquad (5)$$

The quantity X $[= \omega L - 1/(\omega C)]$ is termed the *reactance*

Using eq. (4), we can rewrite eq. (3) as

$$i = \frac{V_0}{|Z|}e^{j(\omega t - \theta)} \qquad (6)$$

Similarly the real and imaginary part of this current will be the physical solution for $v(t) = V_0 cos(\omega t)$ or $v(t) = V_0 sin(\omega t)$, respectively.

Putting $I_0 = V_0/|Z|$ and using rms values $|V| = V_0/\sqrt{2}$ and $|I| = I_0/\sqrt{2}$ we get from eq. (6)

$$|I|e^{-j\theta} = \frac{|V|e^{j0}}{|Z|e^{j\theta}} \quad \text{or,} \quad V = ZI \qquad (7)$$

where all quantities are phasors and eq. (7) is the generalized form of Ohm's law.

Contd..

The phasor diagrams are drawn for the following possible cases:

Case 1: $\omega L > 1/\omega C$

Inductive reactance > the capacitive reactance. Hence $tan\theta$, as given by eq. (5) is positive, so the applied voltage leads the current by the angle θ.

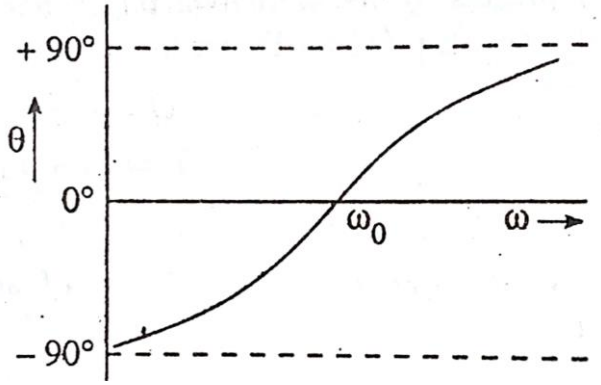

Phase angle vs. frequency

At very low and very high frequencies, θ approaches -90° and +90°, respectively

Case 2: $\omega L < 1/\omega C$

Inductive reactance < the capacitive reactance. Hence $tan\theta$ is negative, so current leads the applied voltage.

Case 3: $\omega L = 1/\omega C$

Total reactance is zero and the circuit is purely resistive. The angle θ is zero, so current and applied voltage in same phase. This case is termed as "**series resonance**"

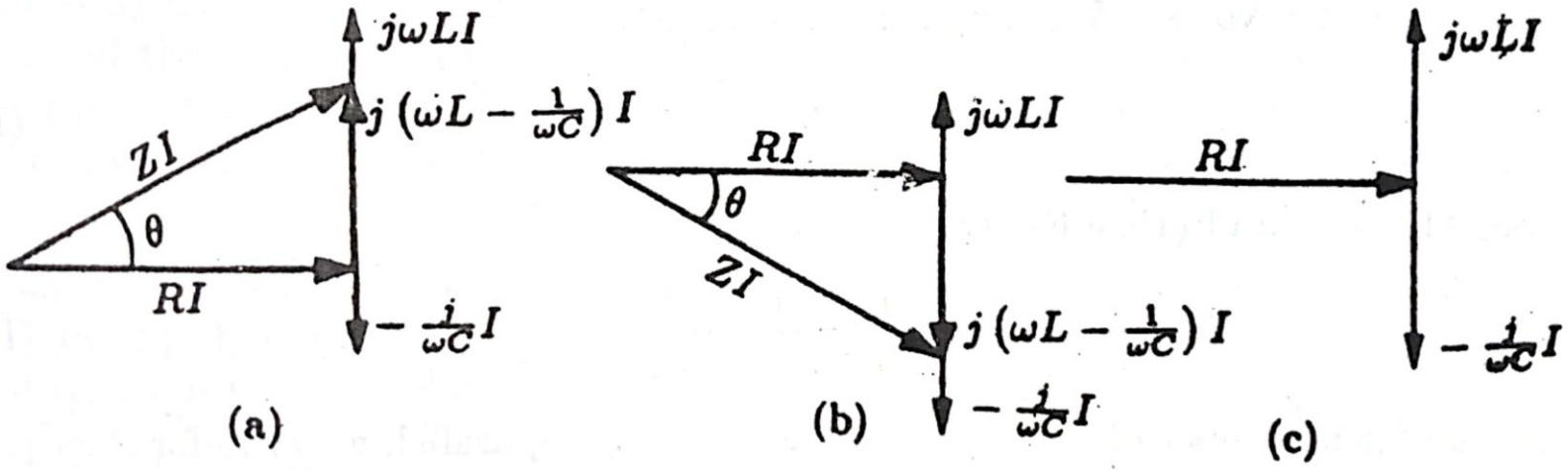

Fig.15.15. Phasor diagrams for (a) $\omega L>1/(\omega C)$, (b) $\omega L<1/(\omega C)$, and (c) $\omega L=1/(\omega C)$

Observations

Impedance in series:

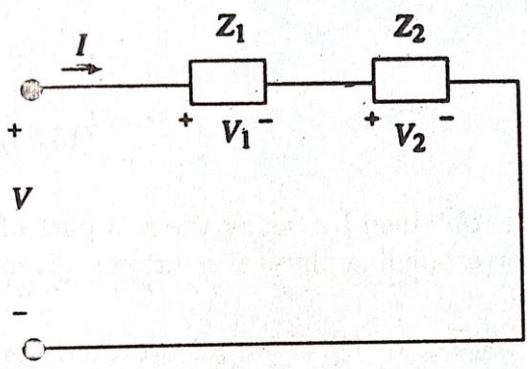

Fig.15.15A. Impedances in series

The applied voltage is (by KVL)

$$V = V_1 + V_2 = (Z_1 + Z_2)I$$

If Z is the equivalent impedance, then

$$V = ZI \quad \Rightarrow \quad Z = Z_1 + Z_2$$

Equivalent impedance of a number of impedances in series is the sum of the impedances

$$Z = Z_1 + Z_2 + Z_3 + \cdots + Z_n = \sum_{i=1}^{n} Z_i$$

Impedance in parallel:

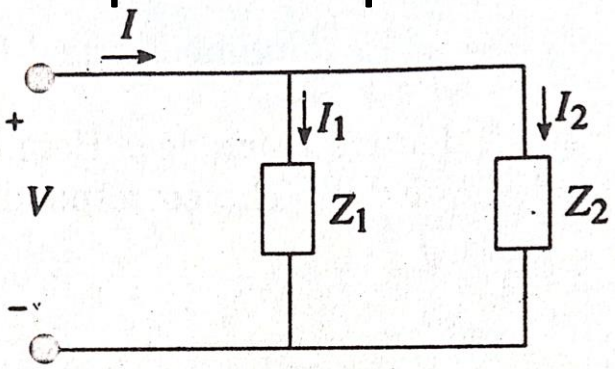

Fig.15.15B. Impedances in parallel

By KCL, $I = I_1 + I_2 = V\left(\frac{1}{Z_1} + \frac{1}{Z_2}\right)$

If Z is the equivalent impedance, then

$$I = \frac{V}{Z} \quad \Rightarrow \quad \frac{1}{Z} = \frac{1}{Z_1} + \frac{1}{Z_2}$$

The reciprocal of the equivalent impedance of a number of impedances in parallel is the sum of the reciprocals of the individual impedances

$$\frac{1}{Z} = \frac{1}{Z_1} + \frac{1}{Z_2} + \cdots + \frac{1}{Z_n} = \sum_{i=1}^{n} \frac{1}{Z_i}$$

Replacing impedances by corresponding admittances, we can also write:

$$Y = Y_1 + Y_2 + \cdots + Y_n = \sum_{i=1}^{n} Y_i$$

Series Resonance in RLC circuit

Resonance occurs in a circuit containing resistance and reactance when the applied voltage is in phase with the current. At resonance circuit is purely resistive. Resonance occurring in a series RLC circuit is called series resonance.

The impedance in series RLC circuit at an angular frequency ω of the applied voltage is

$$Z = R + j\left(\omega L - \frac{1}{\omega C}\right)$$

Condition for resonance: reactance term is zero, i.e.

$$\omega L - \frac{1}{\omega C} = 0 \quad \text{or,} \quad \omega = \omega_0 = \frac{1}{\sqrt{LC}}$$

Therefore, $$f_0 = \frac{\omega_0}{2\pi} = \frac{1}{2\pi\sqrt{LC}}$$

ω_0: resonant angular frequency and f_0: resonant frequency (in Hz)

Impedance at resonance is R; while at off-resonant frequencies the impedance has the magnitude

$$|Z| = \sqrt{R^2 + \left(\omega L - \frac{1}{\omega C}\right)^2}$$

Since, $(\omega L - 1/\omega C)^2$ is +ve, $|Z| > R$ → Impedance is minimum and current is maximum in resonance

Contd..

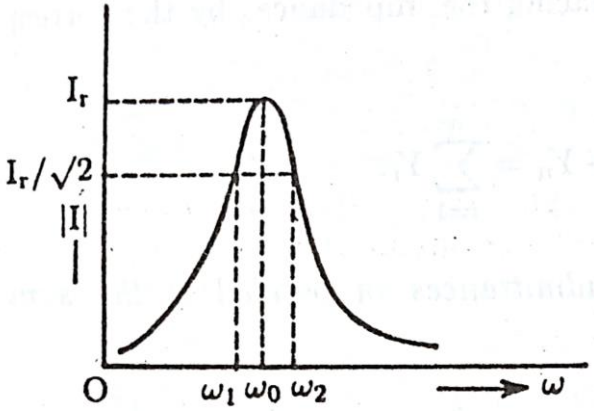

Current response in series RLC circuit

The sharpness of resonance refers to the rapidity of the fall of the current on either side of the resonance frequency.

Sharp resonance: current falls to very low value on either side of the resonant frequency →

RLC circuit exhibits selectivity → can be used as **filter**

Smaller R → greater the current in resonance + sharper the resonance

Higher R → less selective

If V is the rms voltage applied to the circuit, then the rms current at the resonance is $I_r = \frac{V}{R}$

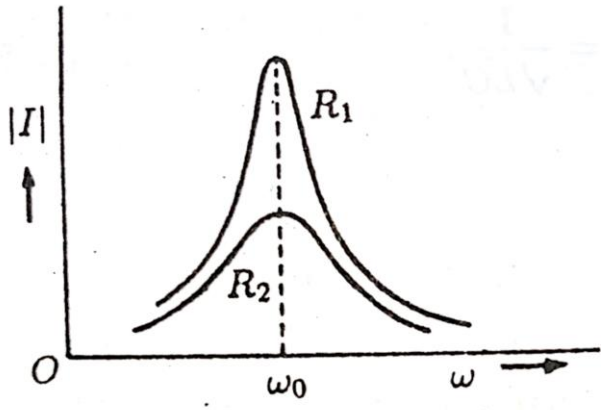

Fig.15.17. Current response for two resistances R_1 and $R_2 (R_1 < R_2)$

In resonance, phasor voltages across R, L, C are

$$V_R = I_r R = V, \quad \text{(a)}$$

$$V_L = j\omega_0 L I_r = j\frac{\omega_0 L}{R}V, \quad \text{(b)}$$

$$\text{and} \quad V_c = -\frac{j}{\omega_0 C}I_r = -\frac{j}{\omega_0 CR}V \quad \text{(c)}$$

→ Entire voltage appears across R. The voltage across L and C do not vanish separately, but the phasor sum is zero and the phase difference between V_L and V_C are 180°.

→ **Bandwidth:** the frequency range over which current is equal to $I = I_r/\sqrt{2}$

Q-factor in series RLC circuit

Q-factor or quality factor of a resonant circuit:
The ratio between the inductive reactance (at resonance) and the resistance of the circuit

$$Q = \frac{\omega_0 L}{R} = \frac{1}{\omega_0 C R} = \frac{1}{R}\sqrt{\frac{L}{C}}$$

As, $\omega_0 L = 1/\omega_0 C$ at resonance

Q is usually large (about 100 or so) as $R << \omega_0 L$

From eq. (a), (b), (c), we can get $|V_L| = |V_c| = QV$ and since Q > 1 $|V_L|$ or $|V_C|$ exceeds the supply voltage V at resonance. <u>Thus a voltage magnification occurs and Q is referred to as "**magnification factor**".</u>

Lower R →larger Q ; sharpness and selectivity increases with Q.

For a high Q circuit, voltage across *inductor* and *Capacitor* attain their maximum at resonance as the frequency is varied.

Bandwidth frequencies of a series RLC circuit

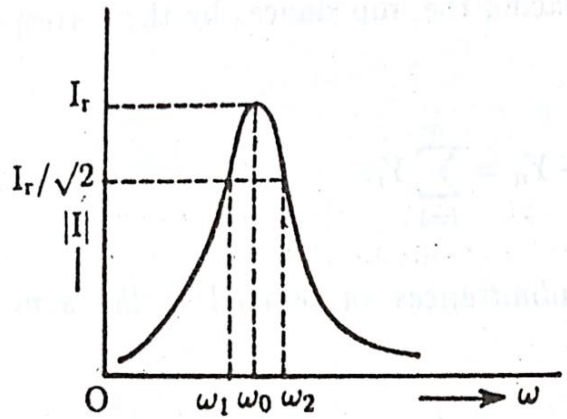

Current response in series RLC circuit

Let ω_x is the angular frequency at which current is $I = I_r/\sqrt{2}$

$$\frac{I_r}{\sqrt{2}} = \frac{V}{\sqrt{2}R} = \frac{V}{\left[R^2 + \left(\omega_x L - \frac{1}{\omega_x C}\right)^2\right]^{1/2}}$$

Since at frequency ω_x, current is

$$I = \frac{V}{|Z|} = \frac{V}{\left[R^2 + \left(w_x L - \frac{1}{w_x C}\right)^2\right]^{1/2}}$$

$$\text{or,} \quad 2R^2 = R^2 + \left(\omega_x L - \frac{1}{\omega_x C}\right)^2$$

$$\text{or,} \quad \omega_x L - \frac{1}{\omega_x C} = \pm R$$

$$\text{or,} \quad \omega_x^2 LC \mp \omega_x RC - 1 = 0.$$

Only positive roots of this eq. are acceptable

The roots are

$$\omega_1 = \frac{\sqrt{R^2C^2 + 4LC} - RC}{2LC}$$

$$\text{and} \quad \omega_2 = \frac{\sqrt{R^2C^2 + 4LC} + RC}{2LC}$$

$$\omega_2 - \omega_1 = \frac{R}{L} = \frac{\omega_0 R}{\omega_0 L} = \frac{\omega_0}{Q}$$

$$\text{or,} \quad Q = \frac{\omega_0}{\omega_2 - \omega_1}.$$

This eq. relates the Q factor with bandwidth
→ Higher the Q, smaller the bandwidth

At frequencies ω_1 and ω_2 the power dissipation is $(I_r/\sqrt{2})^2 R$ → half the power dissipated at resonance. So ω_1 and ω_2 are called **half power frequencies**

Capacitor voltage in series RLC circuit

The voltage across capacitor C is $V_C = -\frac{j}{\omega C}\frac{V}{R + j\left(\omega L - \frac{1}{\omega C}\right)}$ where V is the applied voltage

The magnitude of V_C is

$$|V_C| = \frac{V}{\omega C\sqrt{R^2 + \left(\omega L - \frac{1}{\omega C}\right)^2}} = \frac{V}{[\omega^2 R^2 C^2 + (\omega^2 LC - 1)^2]^{1/2}} \qquad \text{(a)}$$

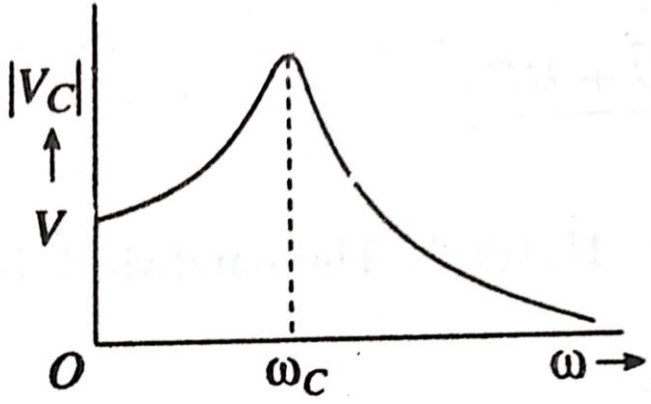

Fig.15.17A. Variation of $|V_C|$ with ω

$|V_C|$ is maximum at $\omega = \omega_C$ when the denominator on the r.h.s. of the eq. (a) is minimum. Therefore, for maximum $|V_C|$, we have

$$\frac{d}{d\omega}[\omega^2 R^2 C^2 + (\omega^2 LC - 1)^2] = 0$$

$$\text{or,} \quad 2\omega R^2 C^2 + 4\omega LC(\omega^2 LC - 1) = 0$$

$$\text{or,} \quad 2LC(\omega^2 LC - 1) + R^2 C^2 = 0$$

$$\text{or,} \quad \omega = \omega_C = \left[\frac{1}{LC}\left(1 - \frac{R^2 C}{2L}\right)\right]^{1/2}$$

$$\text{or,} \quad \omega_C = \omega_0\left[1 - \frac{1}{2Q^2}\right]^{1/2} \qquad \text{(b)}$$

From eq. (b), $\omega_C < \omega_0$ where ω_0 is the resonant frequency.

→ This is expected, as current peaks at ω_0 and the capacitor voltage is a product of current and $1/\omega C$ which increases with decreasing frequency. **When Q is large $\omega_C \simeq \omega_0$**

→ ω_C is sometimes called capacitor charge resonance or voltage resonance, but current resonance is true resonance as current and voltage in the circuit is in phase.

ECE 113- Basic Electronics

Lecture week 10: AC response in circuits

Dr. Ram Krishna Ghosh, Assistant Professor

Office: B601, Research and Development Block

Email: rkghosh@iiitd.ac.in

INDRAPRASTHA INSTITUTE *of*
INFORMATION TECHNOLOGY
DELHI

Sinusoidal voltage applied to a parallel RLC circuit

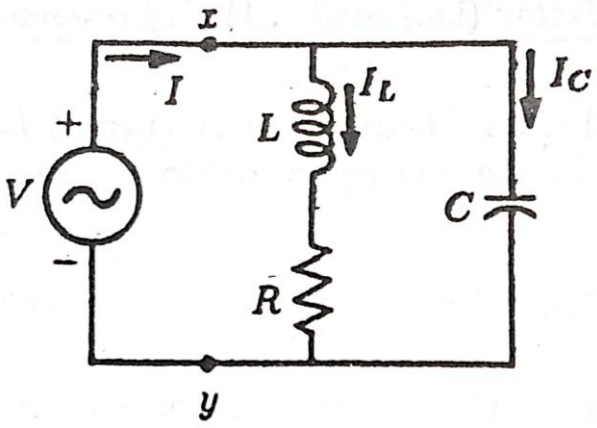

Fig.15.19. A parallel resonant circuit

Let I_L and I_C are phasors for current through the inductor and the capacitor, respectively, and I is the current from the source.

→ I_L and I_C are almost 180° out of phase. I_C leads source voltage V by 90° while I_L lags source voltage V by 90°.

By KCL, the source current I is a phasor sum of I_C and I_L, and in resonance V and I are in phase.

We have, $$I = IC + IL \qquad (1)$$

But, $I = V/Z$; where Z is the impedance offered by the circuit at the terminal x, y in the circuit.

Also, $$I_L = \frac{V}{R + j\omega L} \quad \text{and} \quad I_c = \frac{V}{1/(j\omega C)} = j\omega CV. \qquad (2)$$

Therefore, from (1) and (2),

$$\frac{V}{Z} = \frac{V}{R + j\omega L} + j\omega CV$$

or, $$\frac{1}{Z} = \frac{1}{R + j\omega L} + j\omega C$$

$$\frac{1}{Z} = \frac{R - j\omega L}{R^2 + \omega^2 L^2} + j\omega C$$

[Y is the admittance]

or, $$Y = \frac{1}{Z} = \frac{R + j(\omega C R^2 + \omega^3 L^2 C - \omega L)}{R^2 + \omega^2 L^2} \qquad (3)$$

Contd..

In resonance, *I* and *V* will be in phase when the imaginary part of Y is zero, i.e.,

$$\omega C R^2 + \omega^3 L^2 C - \omega L = 0$$

$$\text{or,} \quad \omega^2 L^2 C = L - C R^2$$

$$\text{or,} \quad \omega = \omega_p = \sqrt{\frac{1}{LC} - \frac{R^2}{L^2}}$$

Corresponding parallel resonance frequency, $f_p = \frac{\omega_p}{2\pi} = \frac{1}{2\pi}\sqrt{\frac{1}{LC} - \frac{R^2}{L^2}}$

ω_P → parallel resonance angular frequency

The impedance of the circuit is purely resistive at resonance

Admittance in resonance → $Y_p = \frac{R}{R^2 + \omega_p^2 L^2} = \frac{R}{L/C} = \frac{CR}{L}$

and the impedance in resonance → $Z_p = \frac{1}{Y_p} = \frac{L}{CR}$

If R is small → Z_P is large.

For R → 0, Z_P → ∞

Also when R → 0 ; $\omega_P \rightarrow \frac{1}{\sqrt{LC}}$ the series resonance angular frequency

Contd..

The line current at parallel resonance → $I_p = \frac{|V|}{Z_p}$

The capacitor current at the parallel resonance → $I_{cp} = \frac{|V|}{1/(\omega_p C)}$

Therefore, $\frac{I_{cp}}{I_p} = \omega_p C Z_p = \frac{\omega_p L}{R}$ since, $Z_P = \frac{L}{CR}$

Thus, $Q = \frac{I_{cp}}{I_p} = \frac{\omega_p L}{R}$

Q of the circuit is defined to be the ratio of the capacitor current to the line current at parallel resonance.

For a small value of R, the impedance at resonance Z_P can be approximated as follows:

$$Z_p = \frac{R^2 + \omega_p^2 L^2}{R} = R\left(1 + \frac{\omega_p^2 L^2}{R^2}\right)$$

$$\approx \frac{\omega_p^2 L^2}{R}, \quad \left[\text{since for small } R, \quad \frac{\omega_p^2 L^2}{R^2} \gg 1\right]$$

$$= Q\omega_p L \qquad \text{since } Q = \omega_p L/R$$

Contd..

At an angular frequency ω ($\neq \omega_P$), the magnitude of the circuit admittance is (from eq. (3))

$$|Y|^2 = \left(\frac{R}{R^2+\omega^2L^2}\right)^2 + \left(\frac{\omega CR^2+\omega^3L^2C-\omega L}{R^2+\omega^2L^2}\right)^2 \qquad (4)$$

If the frequency is changed for maximum impedance (or minimum admittance), then it is obtained by $\frac{d|Y|2}{d\omega} = 0$ (5)

From (4) and (5), we get $\omega_m = \left[\frac{1}{LC}\left(\frac{2CR^2}{L}+1\right)^{\frac{1}{2}} - \frac{R^2}{L^2}\right]^{\frac{1}{2}}$

$$\boxed{\omega_p = \sqrt{\frac{1}{LC} - \frac{R^2}{L^2}}}$$

ω_m = the angular frequency at which the impedance is maximum

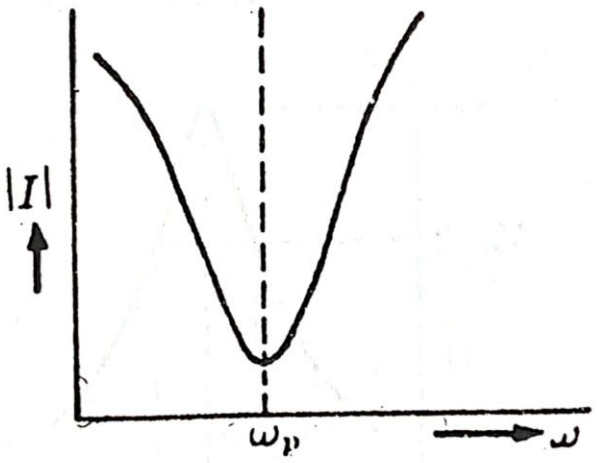

Fig.15.21. Current response of a parallel resonant circuit

- Comparing ω_m with ω_P we find that $\omega_m > \omega_P$ i.e. the maximum impedance is obtained at a frequency higher than the resonant frequency. If Q is large, the difference between ω_m and ω_P are negligible.
- For high Q, the impedance is a maximum at resonance, so that the current $|I|$ is a minimum in contrast to the series resonant case
- Parallel circuit is thus called **rejector circuit** and the phenomenon of minimum current is called **anti-resonance**.
- Larger the Q, higher the selectivity; i.e. current falls more sharply at parallel resonance.

Contd..

- By varying L or C (or both), the resonant frequency can be varied and the circuit can be tuned to the desired frequency, giving a maximum impedance at that frequency.
- The current circulating in this circuit is very large, being Q times the supply (or line) current at resonance. The circuit is thus a reservoir of current, and stores energy in the forms of magnetic energy (in L) and electrical energy (in C). Hence it is called **"Tank Circuit".**

If the parallel resonant circuit is fed by a constant source delivering a current *I*, the voltage across the circuit is

$$V = ZI = \frac{I}{Y}$$

where
$$Y = \frac{1}{Z} = \frac{R - j\omega L}{R^2 + \omega^2 L^2} + j\omega C \simeq \frac{R - j\omega L}{\omega^2 L^2} + j\omega C$$
$$= \frac{R}{\omega^2 L^2} + j\left(\omega C - \frac{1}{\omega L}\right) \qquad (6)$$

Here a high Q circuit has been assumed, taking $\omega L >> R$

For such circuit in the neighborhood of parallel resonance, ω can be replaced by ω_P in the 1st term on the r.h.s. of (6). This will be reduced to $\frac{1}{Q^2 R} = G$,say. Thus the equivalent circuit of a high-Q parallel resonant circuit consists of the parallel combination of three elements: a resistance Q^2R, a capacitance C and an inductance L

The voltage will then be $V = \dfrac{I}{G + j\left(\omega C - \frac{1}{\omega L}\right)}$ (7)

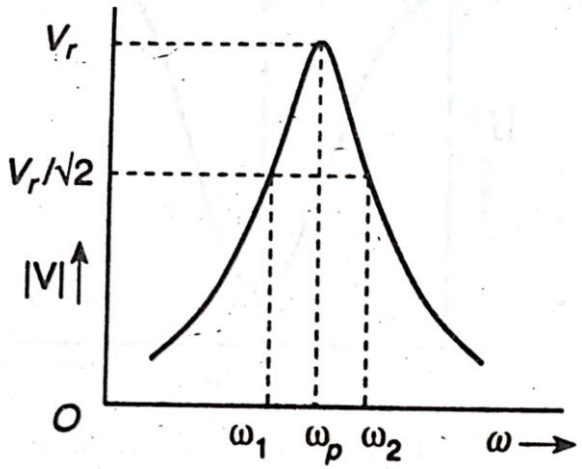

Fig.15.21A. Voltage response of a parallel resonant circuit excited by a constant current source

Clearly, V is maximum when *j*-term in (7) vanishes, i.e. at frequency, $\omega_p = \frac{1}{\sqrt{LC}}$

Observation: The voltage response of a parallel resonant circuit excited by a constant current source is similar to the current response of a series resonant circuit driven by a constant voltage source.

- Due to this similarity, series and parallel resonant circuits are said to be "dual" to each other.
- If I is the rms current, then $V_r = I/G$
- Analogous to the series case, the frequency range over which the voltage is equal to or greater than $V_r/\sqrt{2}$ is called the bandwidth of the circuit.

If ω_x is the angular frequency at which the voltage is $V_r/\sqrt{2}$, then

$$\frac{V_r}{\sqrt{2}} = \frac{I}{\sqrt{2}G} = \frac{I}{\sqrt{G^2 + \left(\omega_x C - \frac{1}{\omega_x L}\right)^2}}$$

$$\text{or,} \quad 2G^2 = G^2 + \left(\omega_x C - \frac{1}{\omega_x L}\right)^2$$

$$\text{or,} \quad \omega_x C - \frac{1}{\omega_x L} = \pm G$$

$$\text{or,} \quad \omega_x^2 LC \mp GL\omega_x - 1 = 0.$$

Only positive roots are acceptable, so

$$\omega_1 = \frac{\sqrt{G^2L^2 + 4LC} - GL}{2LC}$$

$$\text{and} \quad \omega_2 = \frac{\sqrt{G^2L^2 + 4LC} + GL}{2LC}$$

ω_1 and ω_2 are the half-frequencies.

The bandwidth is $\omega_2 - \omega_1 = \frac{G}{C} = \frac{1}{Q^2RC} = \frac{R^2}{\omega_p^2 L^2 RC} = \frac{RLC}{L^2C} = \frac{R}{L} = \frac{\omega_p}{Q}$

$$\text{or,} \quad Q = \frac{\omega_p}{\omega_2 - \omega_1}$$

Larger Q → smaller bandwidth and sharper resonance → greater selectivity

Voltage and current resonance in LC circuit

Voltage resonance Consider a perfect inductor (L) and a perfect capacitor (C) are connected in series. Let I is the alternating current of angular frequency ω passes through the circuit.

The voltage across L is = $j\omega LI$

Net voltage drop across the series combination is $V = jI\left(\omega L - \frac{1}{\omega C}\right)$

The voltage across C is = $-jI/\omega C$

The condition for voltage resonance is $\omega L - \frac{1}{\omega C} = 0 \Rightarrow \omega = \frac{1}{\sqrt{LC}}$

Voltage across L and C do not vanish separately, they are equal in magnitude, but opposite in phase, so the phasor sum is zero.

Below resonance $\omega L < \frac{1}{\omega C}$ so the circuit is capacitive, whereas, above resonance $\omega L > \frac{1}{\omega C}$ and the circuit is inductive

Current resonance Occurs when L and C are in parallel.

If V is the applied alternating voltage, then the current across L and C are $V/j\omega L$ and $j\omega CV$, respectively

The main current is $I = V/j\left(\frac{1}{\omega L} - \omega C\right)$ and at current resonance $\frac{1}{\omega L} - \omega C = 0 \Rightarrow \omega = \frac{1}{\sqrt{LC}}$

In resonance, branch current are finite and are equal in magnitude but opposite in phase

Below resonance $1/\omega L > \omega C$ so the circuit is inductive, whereas, above resonance circuit is capacitive. Opposite to voltage reso.

Exercise

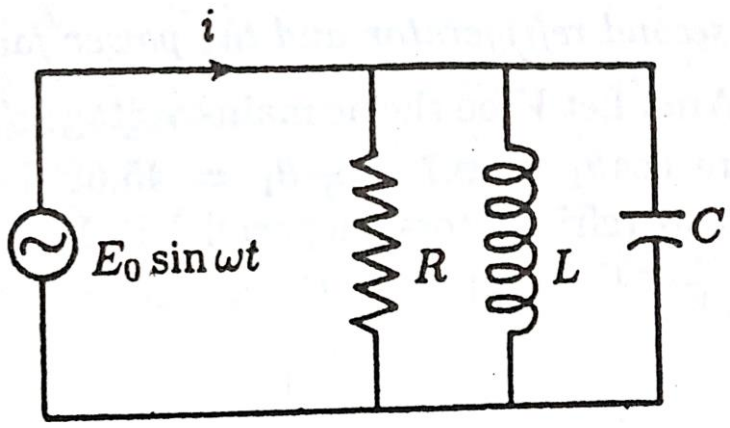

Considering this parallel circuit, calculate (a) the line current '*i*' flowing in the circuit and the admittance, (b) frequency of oscillation, impedance and Q value of the circuit at resonance. Draw the phasor diagram for the current at resonance

$$i_R = E_0 sin\omega t/R$$

i_R is in phase with applied voltage; so

$$i_L = \left(\frac{E_0}{\omega L}\right)\sin(\omega t - 90°)$$

$$i_C = (E_0 \omega C)\sin(\omega t + 90°)$$

i_L lags the applied voltage by 90° while the current i_C leads the applied voltage by 90°

(a)

Instantaneous Line current is

$$i = i_R + i_L + i_C$$
$$= \frac{E_0}{R}\sin\omega t + \left(\omega C - \frac{1}{\omega L}\right) E_0 \cos\omega t$$

Admittance

$$Y = \frac{1}{R} + \frac{1}{j\omega L} + j\omega C = \frac{1}{R} + j\left(\omega C - \frac{1}{\omega L}\right)$$

Contd..

(b)

At resonance, the imaginary part of the admittance is zero, thus

$$\omega_0 C - \frac{1}{\omega_0 L} = 0,$$

$$\text{whence} \quad \omega_0^2 = \frac{1}{LC} \quad \text{or,} \quad \omega_0 = \frac{1}{\sqrt{LC}}$$

So, the required resonant frequency is $f_0 = \frac{\omega_0}{2\pi} = \frac{1}{2\pi\sqrt{LC}}$

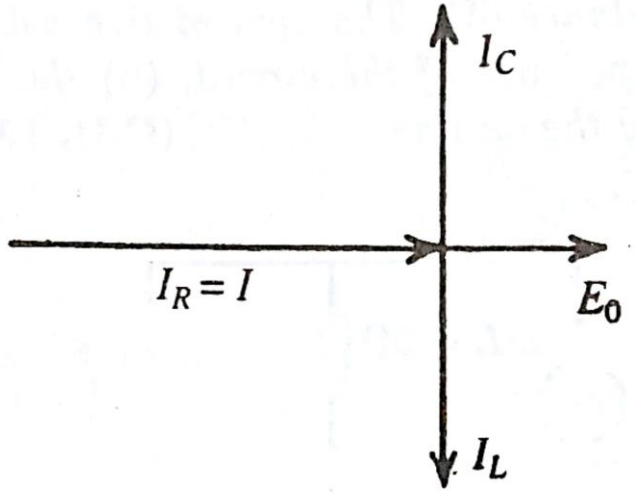

Fig.15.38. Phasor diagram at resonance

The impedance in resonance is $Z_0 = \frac{1}{Y_0} = R$

The amplitude of current through the capacitor at resonance is $I_C = \omega_0 C E_0 = \omega_0 C R I$ where $I(= E_0/R)$ is the amplitude of the line current at resonance.

By definition, $I_C = QI$, where Q is the quality factor of the parallel resonant circuit.

Thus, $Q = \omega_0 C R = R/(\omega_0 L)$ and the bandwidth is $\Delta\omega = \frac{\omega_0}{Q} = \frac{1}{CR}$

AC bridge

AC bridge is a natural extension of DC Wheatstone bridge.

The bridge is said to be balanced when there is no current through the detector.

The condition for balance is that the voltage drop between point A and C in zero. This condition satisfied when the voltage drop from B to A is equal to the voltage drop from B to C, in both magnitude and phase.

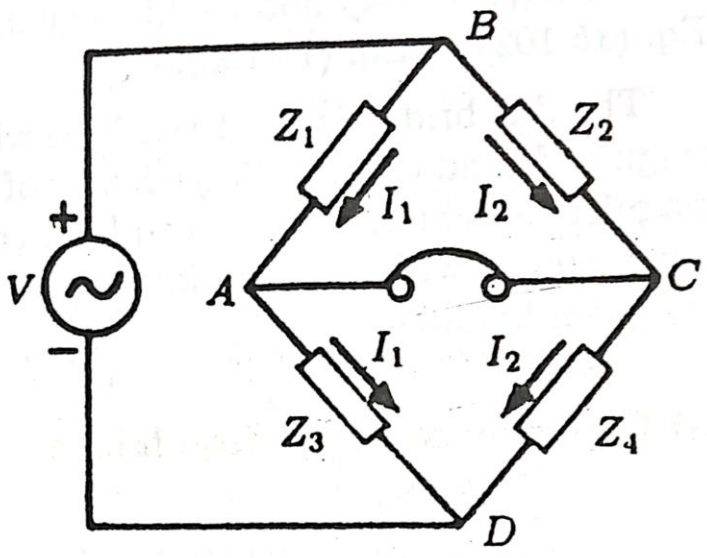

Fig.15.24. The balance of a generalised AC bridge

$$I_1 Z_1 = I_2 Z_2 \qquad (1)$$

When the bridge is balanced, then $I_1 = \dfrac{V}{Z_1 + Z_3}$ and $I_2 = \dfrac{V}{Z_2 + Z_4}$ (2)

From (1) and (2), $\dfrac{Z_1}{Z_1 + Z_3} = \dfrac{Z_2}{Z_2 + Z_4}$ or, $Z_1 Z_4 = Z_2 Z_3$ (3)

In terms of admittance, we can write $Y_1 Y_4 = Y_2 Y_3$ (4)

Eq. (3) and (4) is the general equation for balance of the AC bridge

$$|Z_1||Z_4|e^{j(\theta_1+\theta_4)} = |Z_2||Z_3|e^{j(\theta_2+\theta_3)}$$

Thus, condition for the balance of a AC bridge: (i) $|Z_1||Z_4| = |Z_2||Z_3|$

(ii) $\theta_1 + \theta_4 = \theta_2 + \theta_3$

Exercise

An AC circuit connected to a 220V, 50Hz supply contains a 20H coil of resistance 100Ω connected in series with a 1.0μF capacitor. Calculate the power factor and the power consumed in the circuit.

Ans. Impedance,

$$Z = R + j\left(\omega L - \frac{1}{\omega C}\right) = 100 + j\left(100\pi \times 20 - \frac{1}{100\pi \times 10^{-6}}\right),$$

since $\omega = 2\pi f = 100\pi$ rad/s or, $Z = (100 + j3100)\Omega = |Z|e^{j\theta}$, where $|Z| = 100 \times \sqrt{1 + 31^2} = 3101\Omega$ and $\tan\theta = 31$.

$$\text{Power factor, } \cos\theta = \frac{100}{|Z|} = \frac{1}{31.01} = 0.032.$$

$$\text{Power consumed} = \text{rms voltage} \times \text{rms current} \times \cos\theta$$

$$= 220 \times \frac{220}{|Z|} \times 0.032 = \frac{(220)^2}{3101} \times 0.032 = 0.5\,\text{W}.$$

$$cos\theta = \frac{1}{\sqrt{1 + tan^2\theta}} = \frac{R}{|Z|}$$

$$\tan\theta = \frac{X}{R}$$

where X is reactance of series circuit

$$|Z| = \sqrt{R^2 + X^2}$$

Exercise

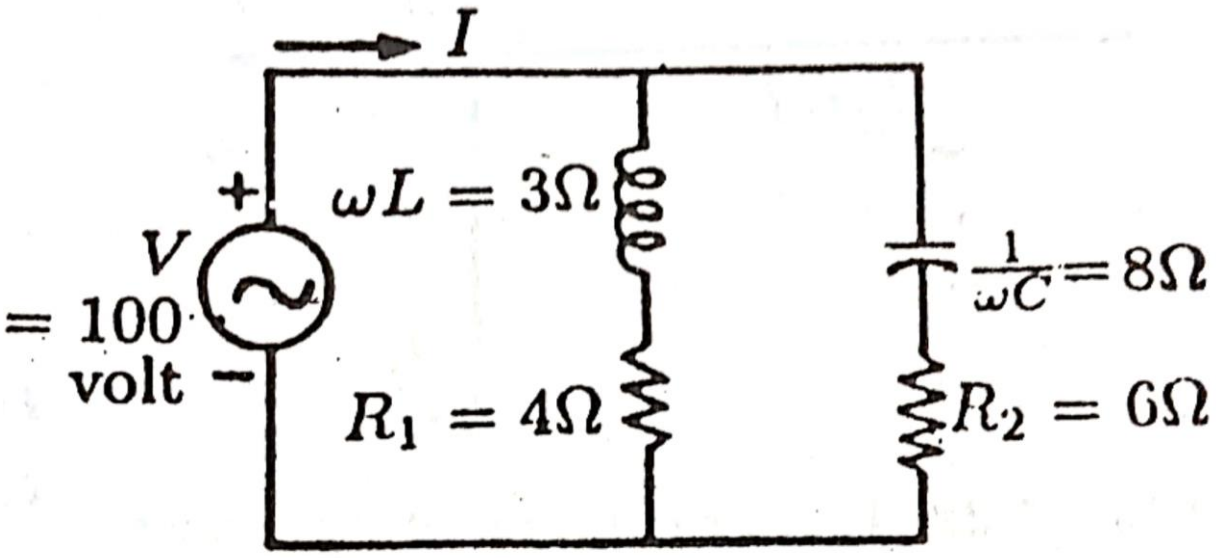

Find (a) the impedance of the circuit, (b) the line current, (c) the power factor and (d) the power supplied by the ac line.

Contd..

(a) The impedance of the circuit is

$$Z = \frac{(R_1 + j\omega L)(R_2 - j/\omega C)}{R_1 + R_2 + j(\omega L - 1/\omega C)} = \frac{(4 + j3)(6 - j8)}{4 + 6 + j(3 - 8)}$$

$$= \frac{48 - j14}{10 - j5} = \frac{2}{5}\frac{(24 - j7)(2 + j)}{2^2 + 1^2}$$

$$= \frac{2}{5} \cdot \frac{55 + 10j}{5} = (4.4 + j0.8)\Omega.$$

(b) The line current is

$$I = \frac{V}{Z} = \frac{100}{4.4 + j\ 0.8} = \frac{250}{11 + j2} = \frac{250(11 - j2)}{125} = (22 - j4)\ \text{A}.$$

(c) The line current I lags the line voltage V by an angle θ, where $\tan\theta = \frac{4}{22} = \frac{2}{11}$. Therefore, the power factor is $\cos\theta = \frac{11}{\sqrt{125}} = \frac{11}{5\sqrt{5}}$.

(d) The power supplied by the ac line is

$$P = V_{\text{rms}} I_{\text{rms}} \cos\theta = 100 \times \sqrt{22^2 + 4^2} \times \frac{11}{5\sqrt{5}} = 2200\ \text{W}.$$

Exercise 1: AC network analysis

Mesh analysis

Find mesh currents I_1 and I_2 in the network of Fig.

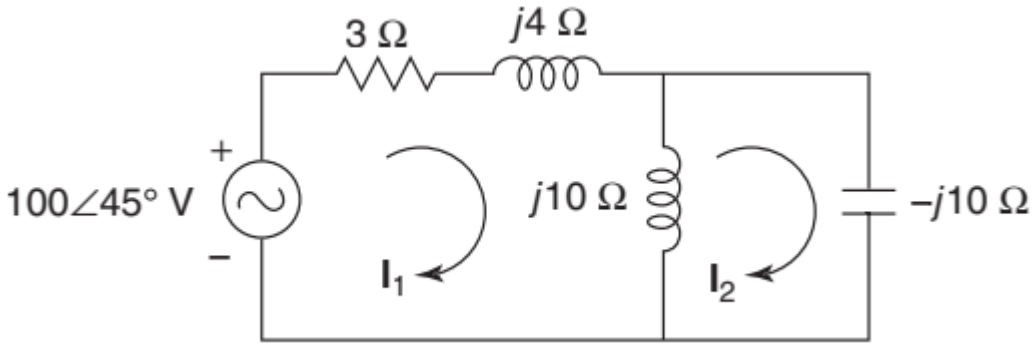

Solution Applying KVL to Mesh 1,

$$100\angle 45^\circ - (3 + j4)\mathbf{I}_1 - j10(\mathbf{I}_1 - \mathbf{I}_2) = 0$$

$$(3 + j14)\mathbf{I}_1 - j10\mathbf{I}_2 = 100\angle 45^\circ \qquad \ldots(\text{i})$$

Applying KVL to Mesh 2,

$$-j10(\mathbf{I}_2 - \mathbf{I}_1) + j10(\mathbf{I}_2) = 0$$

$$j10\mathbf{I}_1 = 0 \qquad \ldots(\text{ii})$$

$$\mathbf{I}_1 = 0$$

Substituting $\mathbf{I}_1$ in Eq. (i),

$$-j10\mathbf{I}_2 = 100\angle 45^\circ$$

$$\mathbf{I}_2 = \frac{100\angle 45^\circ}{-j10} = 10\angle 135^\circ \text{ A}$$

Exercise 2: AC network analysis

Mesh analysis

In the following network, find the value of V_2 so that the current through $(2 + j3)$ ohm impedance is zero

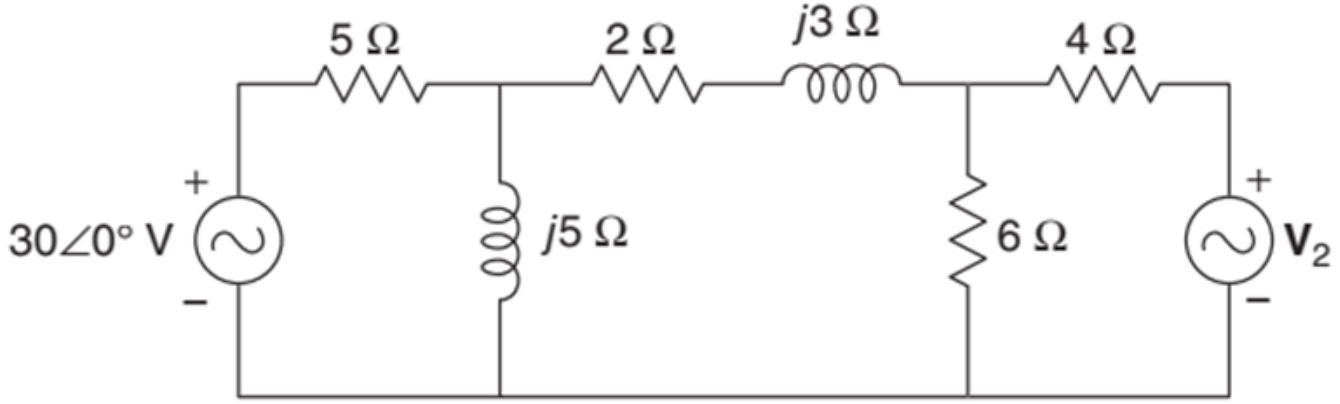

Exercise 2 solution: AC network analysis

Solution Applying KVL to Mesh 1,

$$30\angle 0° - 5\mathbf{I}_1 - j5(\mathbf{I}_1 - \mathbf{I}_2) = 0$$

$$(5 + j5)\mathbf{I}_1 - j5\mathbf{I}_2 = 30\angle 0° \qquad \ldots(\text{i})$$

Applying KVL to Mesh 2,

$$-j5(\mathbf{I}_2 - \mathbf{I}_1) - (2 + j3)\mathbf{I}_2 - 6(\mathbf{I}_2 - \mathbf{I}_3) = 0$$

$$-j5\mathbf{I}_1 + (8 + j8)\mathbf{I}_2 - 6\mathbf{I}_3 = 0 \qquad \ldots(\text{ii})$$

Applying KVL to Mesh 3,

$$-6(\mathbf{I}_3 - \mathbf{I}_2) - 4\mathbf{I}_3 - \mathbf{V}_2 = 0$$

$$-6\mathbf{I}_2 + 10\mathbf{I}_3 = -\mathbf{V}_2 \qquad \ldots(\text{iii})$$

Writing Eqs (i), (ii) and (iii) in matrix form,

$$\begin{bmatrix} 5 + j5 & -j5 & 0 \\ -j5 & 8 + j8 & -6 \\ 0 & -6 & 10 \end{bmatrix} \begin{bmatrix} \mathbf{I}_1 \\ \mathbf{I}_2 \\ \mathbf{I}_3 \end{bmatrix} = \begin{bmatrix} 30\angle 0° \\ 0 \\ -\mathbf{V}_2 \end{bmatrix}$$

By Cramer's rule

$$\mathbf{I}_2 = \frac{\begin{vmatrix} 5 + j5 & 30\angle 0° & 0 \\ -j5 & 0 & -6 \\ 0 & -\mathbf{V}_2 & 10 \end{vmatrix}}{\begin{vmatrix} 5 + j5 & -j5 & 0 \\ -j5 & 8 + j8 & -6 \\ 0 & -6 & 10 \end{vmatrix}} = 0$$

$$(5 + j5)(-6\mathbf{V}_2) - (30)(-j50) = 0$$

$$\mathbf{V}_2 = \frac{j1500}{30 + j30} = 35.36\angle 45° \text{ V}$$

Exercise 3: AC network analysis

Mesh analysis

Find the voltage across the 4 Ω resistor in the network

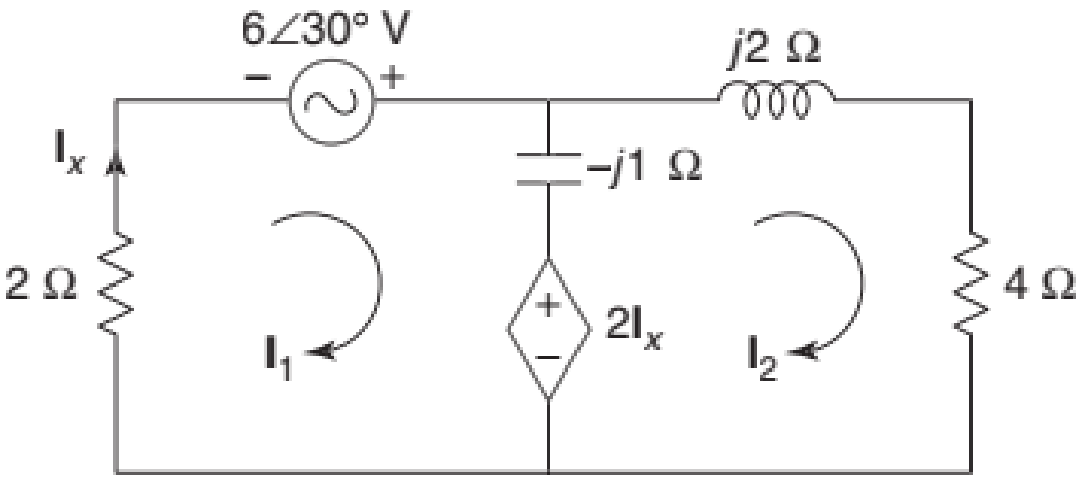

Applying KVL to Mesh 1,

$$-2\mathbf{I}_1 + 6\angle 30^\circ + j1(\mathbf{I}_1 - \mathbf{I}_2) - 2\mathbf{I}_x = 0$$

$$-2\mathbf{I}_1 + 6\angle 30^\circ + j1\mathbf{I}_1 - j1\mathbf{I}_2 - 2\mathbf{I}_1 = 0$$

$$(4 - j1)\mathbf{I}_1 + j1\mathbf{I}_2 = 6\angle 30^\circ \qquad \ldots\text{(ii)}$$

Applying KVL to Mesh 2,

$$2\mathbf{I}_x + j1(\mathbf{I}_2 - \mathbf{I}_1) - j2\mathbf{I}_2 - 4\mathbf{I}_2 = 0$$

$$2\mathbf{I}_1 + j1\mathbf{I}_2 - j1\,\mathbf{I}_1 - j2\mathbf{I}_2 - 4\mathbf{I}_2 = 0$$

$$(2 - j1)\mathbf{I}_1 - (4 + j1)\mathbf{I}_2 = 0 \qquad \ldots\text{(iii)}$$

Writing Eqs (ii) and (iii) in matrix form,

$$\begin{bmatrix} 4 - j1 & j1 \\ 2 - j1 & -(4 + j1) \end{bmatrix} \begin{bmatrix} \mathbf{I}_1 \\ \mathbf{I}_2 \end{bmatrix} = \begin{bmatrix} 6\angle 30^\circ \\ 0 \end{bmatrix}$$

By Cramer's rule,

$$\mathbf{I}_2 = \frac{\begin{vmatrix} 4 - j1 & 6\angle 30^\circ \\ 2 - j1 & 0 \end{vmatrix}}{\begin{vmatrix} 4 - j1 & j1 \\ 2 - j1 & -(4 + j1) \end{vmatrix}} = 0.74\angle -2.91^\circ \text{ A}$$

$$V_{4\Omega} = 4\mathbf{I}_2 = 4(0.74\angle -2.91^\circ) = 2.96\angle -2.91^\circ \text{ V}$$

Exercise 4: AC network analysis

Node analysis

In the network shown in the following Fig., determine V_a and V_b.

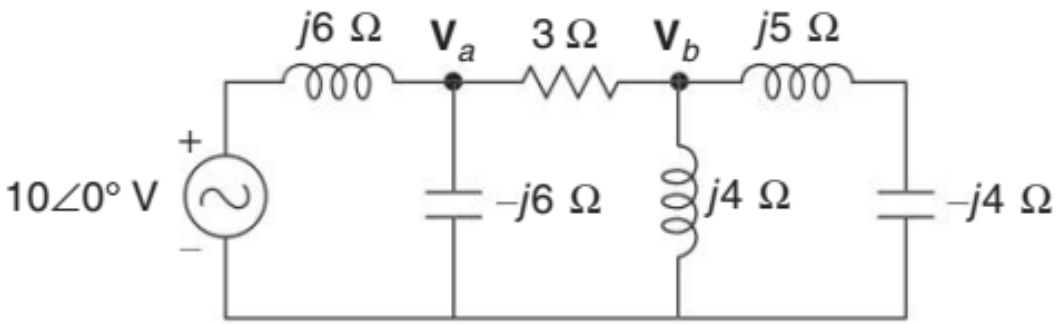

Solution Applying KCL at Node a,

$$\frac{\mathbf{V}_a - 10\angle 0^\circ}{j6} + \frac{\mathbf{V}_a}{-j6} + \frac{\mathbf{V}_a - \mathbf{V}_b}{3} = 0$$

$$\left(\frac{1}{j6} - \frac{1}{j6} + \frac{1}{3}\right)\mathbf{V}_a - \frac{1}{3}\mathbf{V}_b = \frac{10\angle 0^\circ}{j6}$$

$$0.33\mathbf{V}_a - 0.33\mathbf{V}_b = 1.67\angle -90^\circ \qquad \ldots\text{(i)}$$

Applying KCL at Node b,

$$\frac{\mathbf{V}_b - \mathbf{V}_a}{3} + \frac{\mathbf{V}_b}{j4} + \frac{\mathbf{V}_b}{j1} = 0$$

$$-\frac{1}{3}\mathbf{V}_a + \left(\frac{1}{3} + \frac{1}{j4} + \frac{1}{j1}\right)\mathbf{V}_b = 0$$

$$-0.33\mathbf{V}_a + (0.33 - j1.25)\mathbf{V}_b = 0 \qquad \ldots\text{(ii)}$$

Adding Eqs (i) and (ii),

$$-j1.25\mathbf{V}_b = 1.67\angle -90^\circ$$

$$\mathbf{V}_b = \frac{1.67\angle -90^\circ}{-j1.25} = 1.34\angle 0^\circ \text{ V}$$

Substituting $\mathbf{V}_b$ in Eq. (i),

$$0.33\mathbf{V}_a - 0.33(1.34\angle 0^\circ) = 1.67\angle -90^\circ$$

$$\mathbf{V}_a = \frac{1.73\angle 75.17^\circ}{0.33} = 5.24\angle -75.17^\circ \text{ V}$$

Exercise 5: AC network analysis

Superposition theorem

Find the current through the 3 + *j*4 ohm impedance.

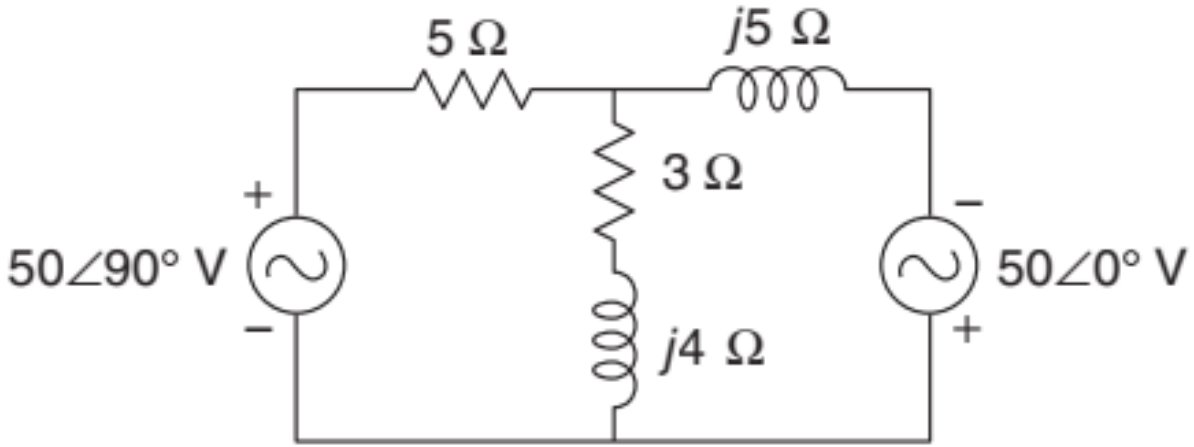

Exercise 5 solution: AC network analysis

Solution

Step I When the 50 ∠90° V source is acting alone

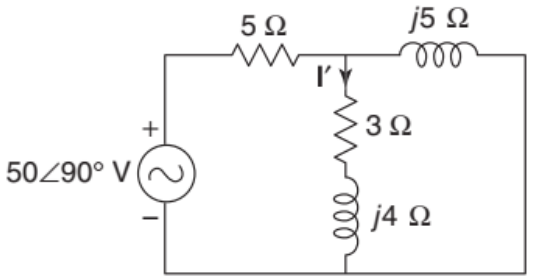

$$\mathbf{Z}_T = 5 + \frac{(3+j4)(j5)}{3+j9} = 6.35\angle 23.2^\circ\ \Omega$$

$$\mathbf{I}_T = \frac{50\angle 90^\circ}{6.35\angle 23.2^\circ} = 7.87\angle 66.8^\circ\ \text{A}$$

By current division rule,

$$\mathbf{I}' = (7.87\angle 66.8^\circ)\left(\frac{j5}{3+j9}\right) = 4.15\angle 85.3^\circ\ \text{A}(\downarrow)$$

Step II When the 50∠0° V source is acting alone

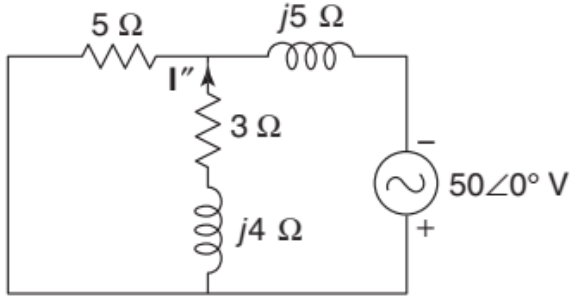

$$\mathbf{Z}_T = j5 + \frac{5(3+j4)}{8+j4} = 6.74\angle 68.2^\circ\ \Omega$$

$$\mathbf{I}_T = \frac{50\angle 0^\circ}{6.74\angle 68.2^\circ} = 7.42\angle -68.2^\circ\ \text{A}$$

By current division rule,

$$\mathbf{I}'' = (7.42\angle -68.2^\circ)\left(\frac{5}{8+j4}\right) = 4.15\angle -94.77^\circ\ \text{A}(\uparrow) = 4.15\angle 85.3^\circ\ \text{A}(\downarrow)$$

Step III By superposition theorem,

$$\mathbf{I} = \mathbf{I}' + \mathbf{I}'' = 4.15\ \angle 85.3^\circ + 4.15\ \angle 85.3^\circ = 8.31\ \angle 85.3^\circ\text{A}\ (\downarrow)$$

Exercise 6: AC network analysis

Thevenin analysis

Obtain Thevenin's equivalent network for the terminals A and B in Fig.

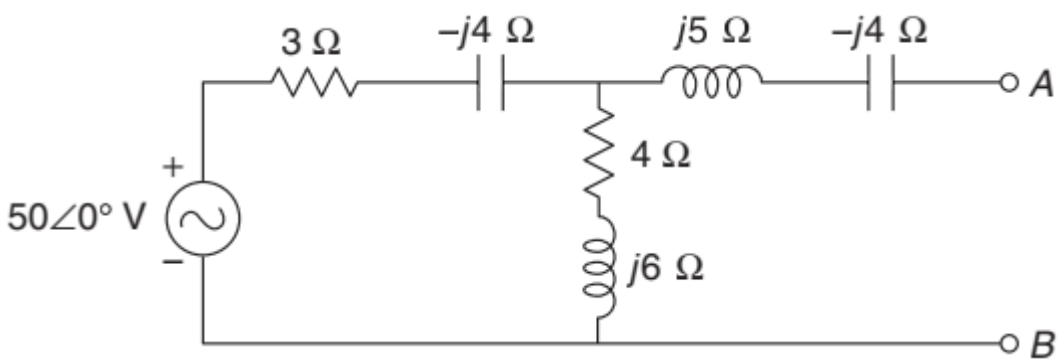

Applying KVL to the mesh,

$$50\angle 0° - (3 - j4)\,\mathbf{I} - (4 + j6)\,\mathbf{I} = 0$$

$$\mathbf{I} = \frac{50\angle 0°}{(3 - j4) + (4 + j6)} = 6.87\angle -15.95°\ \text{A}$$

$$\mathbf{V}_{Th} = (4 + j6)\,\mathbf{I} = (4 + j6)\,(6.87\angle -15.95°) = 49.5\angle 40.35°\ \text{V}$$

$$\mathbf{Z}_{Th} = (j5 - j4) + \frac{(3 - j4)(4 + j6)}{(3 - j4) + (4 + j6)} = 4.83\angle -1.13°\ \Omega$$

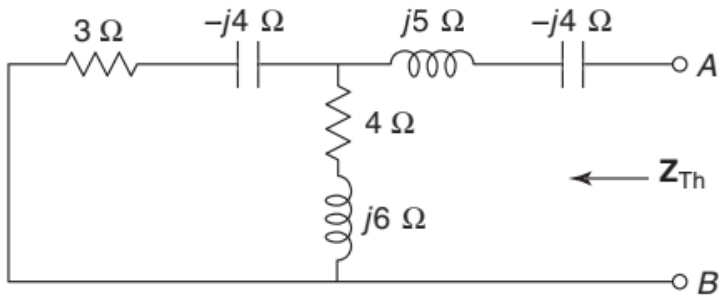

Thevenin's Equivalent Network

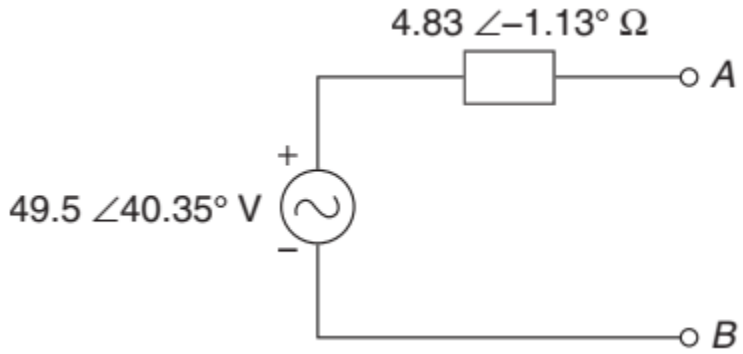

Exercise 7: AC network analysis

Norton analysis

Obtain Norton's equivalent network between terminals A and B as shown in Fig.

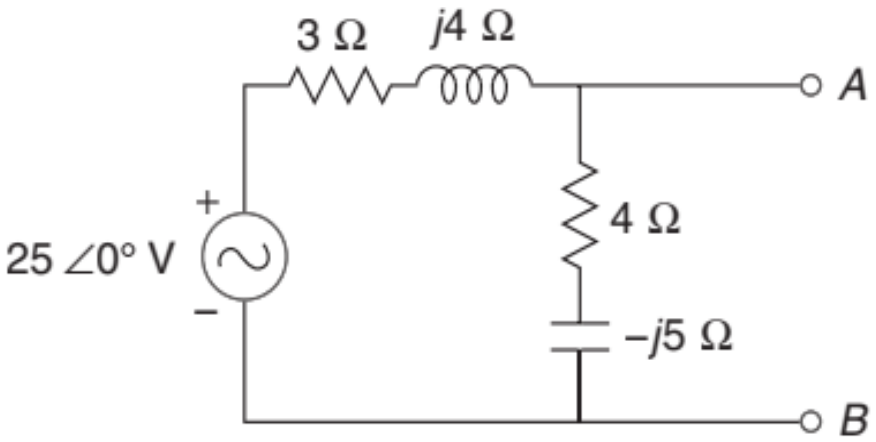

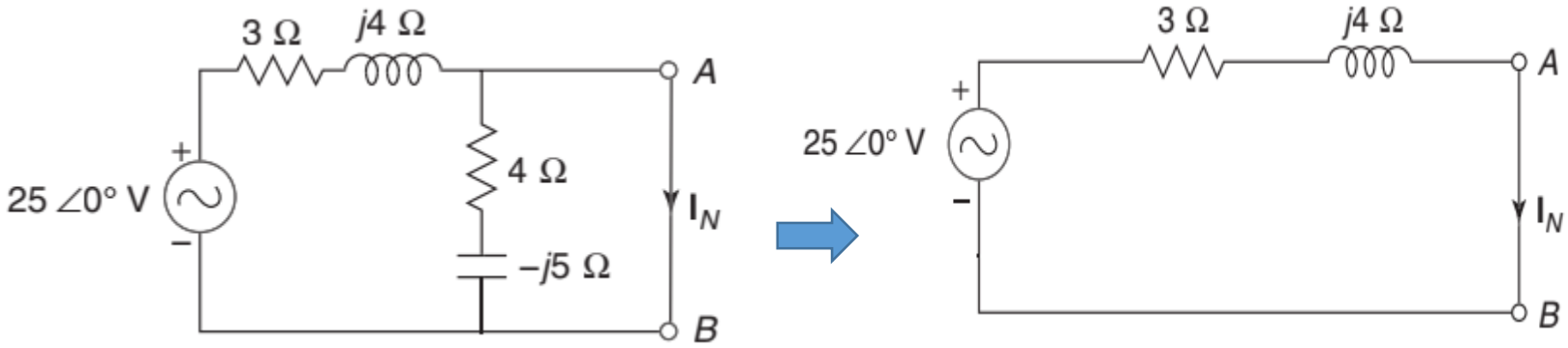

$$\mathbf{I}_N = \frac{25\angle 0^\circ}{3 + j4} = 5\angle -53.13^\circ \text{ A}$$

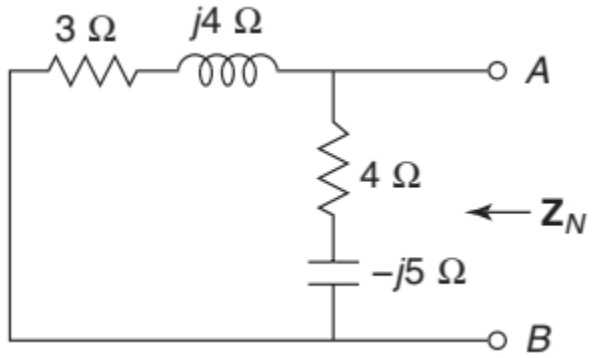

$$\mathbf{Z}_N = \frac{(3 + j4)(4 - j5)}{3 + j4 + 4 - j5} = 4.53\angle 9.92^\circ\ \Omega$$

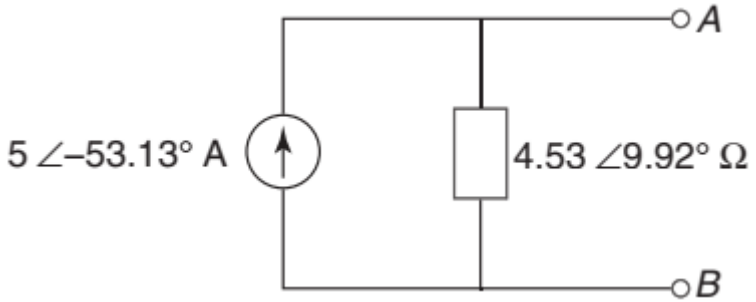

Norton's Equivalent Network

Maximum power transfer theorem with load impedance (case (i))

This theorem is used to determine the value of load impedance for which the source will transfer maximum

Case (i) When the load impedance is variable resistance

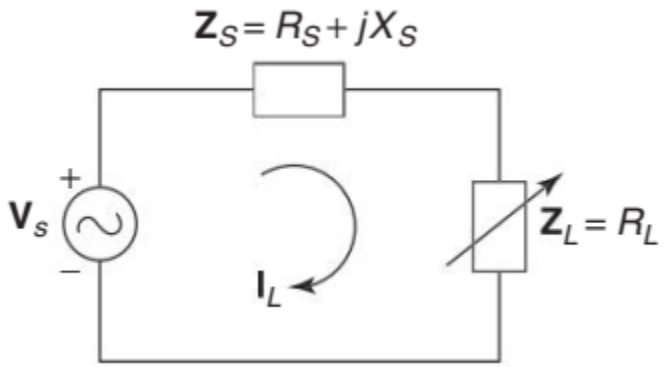

$$\mathbf{I}_L = \frac{\mathbf{V}_s}{\mathbf{Z}_s + \mathbf{Z}_L} = \frac{\mathbf{V}_s}{R_s + jX_s + R_L}$$

$$|\mathbf{I}_L| = \frac{|\mathbf{V}_s|}{\sqrt{(R_s + R_L)^2 + X_s^2}}$$

The power delivered to the load is

$$P_L = |\mathbf{I}_L|^2 R_L = \frac{|\mathbf{V}_s|^2 R_L}{\sqrt{(R_s + R_L)^2 + X_s^2}}$$

For power to be maximum,

$$\frac{dP_L}{dR_L} = 0$$

$$|\mathbf{V}_s|^2 \left[\frac{\{(R_s + R_L)^2 + X_s^2\} - 2R_L(R_s + R_L)}{[(R_s + R_L)^2 + X_s^2]^2} \right] = 0$$

$$(R_s + R_L)^2 + X_s^2 - 2R_L(R_s + R_L) = 0$$

$$R_s^2 + 2R_sR_L + R_L^2 + X_s^2 - 2R_LR_s - 2R_L^2 = 0$$

$$R_s^2 + X_s^2 - R_L^2 = 0$$

$$R_L^2 = R_s^2 + X_s^2$$

$$R_L = \sqrt{R_s^2 + X_s^2} = |Z_s|$$

Hence, load resistance RL should be equal to the magnitude of the source impedance for maximum power transfer

Maximum power transfer theorem with load impedance (case (ii))

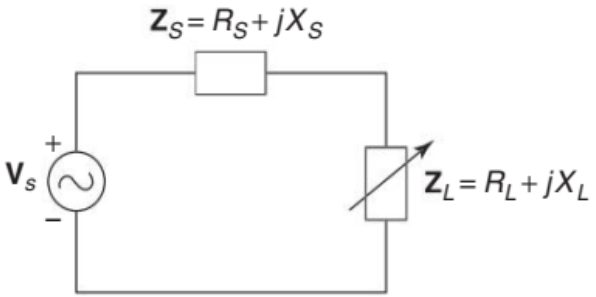

Complex impedance load

Case (ii) When the load impedance is a complex impedance with variable resistance and variable reactance

$$\mathbf{I}_L = \frac{\mathbf{V}_s}{\mathbf{Z}_s + \mathbf{Z}_L}$$

$$|\mathbf{I}_L| = \frac{|\mathbf{V}_s|}{\sqrt{(R_s + R_L)^2 + (X_s + X_L)^2}}$$

The power delivered to the load is

$$P_L = |\mathbf{I}_L|^2 R_L = \frac{|\mathbf{V}_S|^2 R_L}{(R_s + R_L)^2 + (X_s + X_L)^2}$$

For maximum value of P_L, denominator of the equation should be small, ie. $X_L = -X_s$

$$P_L = \frac{|\mathbf{V}_S|^2 R_L}{(R_s + R_L)^2}$$

Differentiating the above equation w.r.t. R_L and equating to zero

$$\frac{dP_L}{dR_L} = |\mathbf{V}_s|^2 \left[\frac{(R_s + R_L)^2 - 2R_L(R_s + R_L)}{(R_s + R_L)^2} \right] = 0$$

$$(R_s + R_L)^2 - 2R_L(R_s + R_L) = 0$$

$$R_s^2 + 2R_sR_L + R_L^2 - 2R_LR_s - 2R_L^2 = 0$$

$$R_s^2 - R_L^2 = 0$$

$$R_L^2 = R_s^2$$

$$R_L = R_s$$

$$\boxed{\mathbf{Z}_L = \mathbf{Z}_s^* = R_s - jX_s}$$

Hence, load resistance R_L should be equal to source resistance R_L and load reactance X_L should be equal to negative value of source reactance for maximum power transfer.

i.e. load impedance should be a complex conjugate of the source impedance.

Maximum power transfer theorem with load impedance (case (iii))

Case (iii) When the load impedance is a complex impedance with variable resistance and fixed reactance

load resistance R_L should be equal to the magnitude of the impedance $Z_s + jX_L$, i.e. $|Z_s + jX_L|$ for maximum power transfer

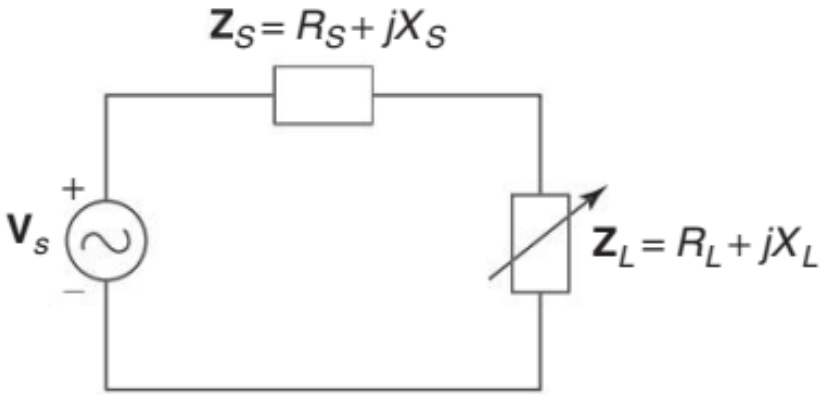

Exercise 8 and solution: AC network analysis

MPT analysis

Find the value of load impedance Z_L so that maximum power can be transferred to it in the following network. Find maximum power.

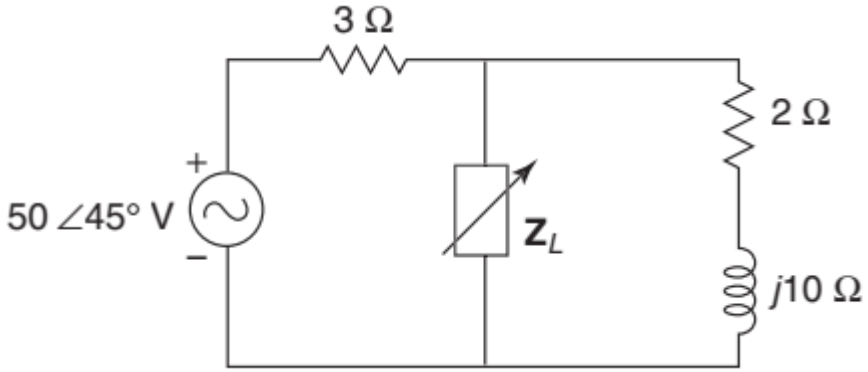

Step I Calculation of $\mathbf{V}_{Th}$

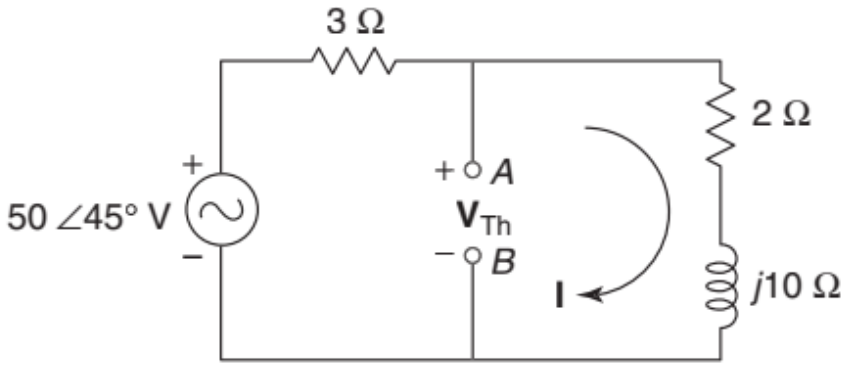

$$\mathbf{I} = \frac{50\angle 45^\circ}{3+2+j10} = 4.47\angle -18.43^\circ \text{ A}$$

$$\mathbf{V}_{Th} = (2+j10)\,\mathbf{I} = (2+j10)(4.47\angle -18.43^\circ) = 45.6\angle 60.26^\circ \text{ V}$$

Calculation of $\mathbf{Z}_{Th}$

$$\mathbf{Z}_{Th} = \frac{3(2+j10)}{3+2+j10} = (2.64+j0.72)\ \Omega$$

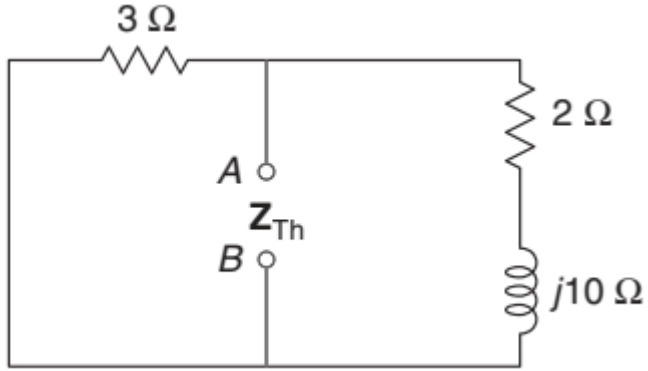

Calculation of $\mathbf{Z}_L$

$$\mathbf{Z}_L = (2.64 - j0.72)\ \Omega$$

For maximum power transfer, the load impedance should be complex conjugate of the source impedance.

Exercise 8 and solution: AC network analysis

Calculation of P_{max}

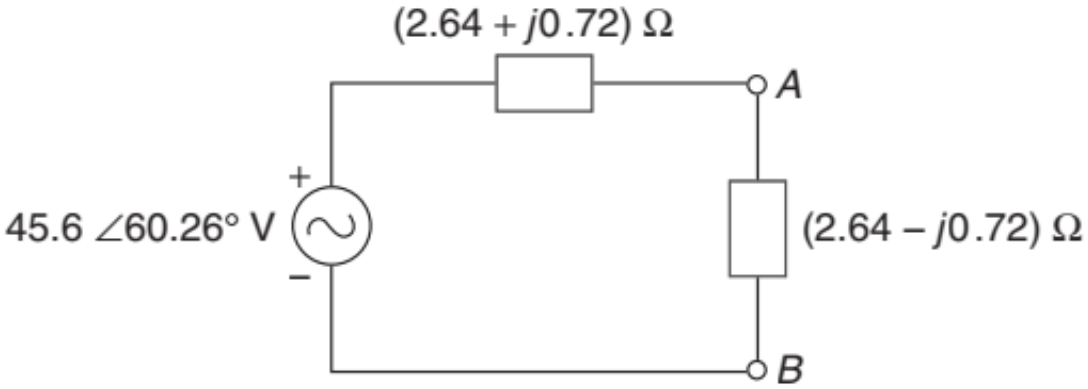

$$P_{max} = \frac{|\mathbf{V}_{Th}|^2}{4R_L} = \frac{|45.6|^2}{4 \times 2.64} = 196.91 \text{ W}$$

ECE 113- Basic Electronics

Lecture week 11: Op-Amp

Dr. Ram Krishna Ghosh, Assistant Professor

Office: B601, Research and Development Block

Email: rkghosh@iiitd.ac.in

INDRAPRASTHA INSTITUTE *of*
INFORMATION TECHNOLOGY
DELHI

Op-Amps

Presentation Outline

- What is an Op-Amp?
- Characteristics of Ideal and Real Op-Amps
- Common Op-Amp Circuits
- Applications of Op-Amps
- References

Operational Amplifiers (Op amp)

- Analog integrated circuit (IC)
- Developed to perform mathematical operations
- Earlier op-amps were vacuum tube based
- Enabled construction of analog computers

Applications:

✓Amplifier

✓Analog computation – comparator, sum, integration, differentiation

✓Analog Filter

✓Instrumentation amplifier

✓Oscillator

✓Controller

What is an Op-Amp?

- An *Operational Amplifier* (known as an "Op-Amp") is a device that is used to amplify a signal using an external power source
- Op-Amps are generally composed of:
  - Transistors, Resistors, Capacitors

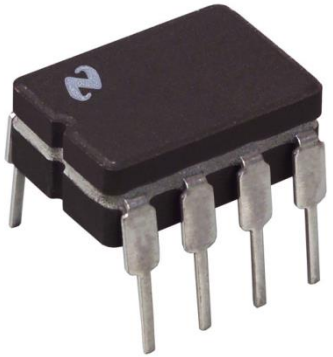

=

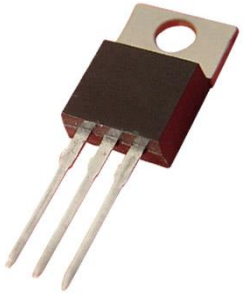

+

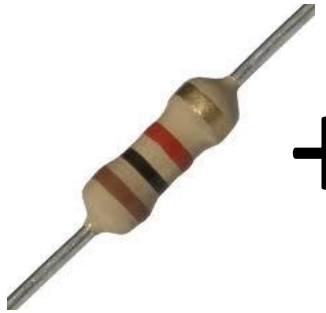

+

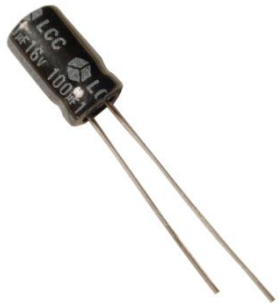

Op-amp

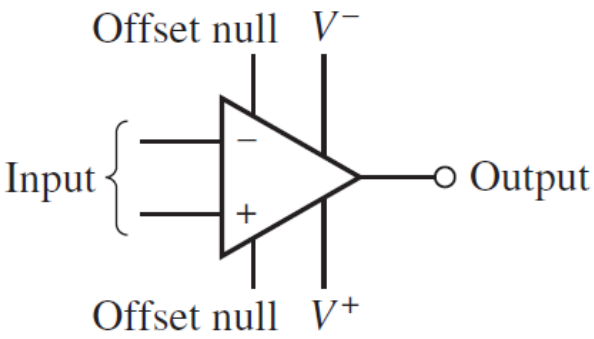

(a)

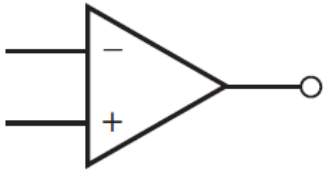

(b)

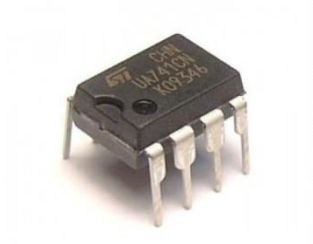

741

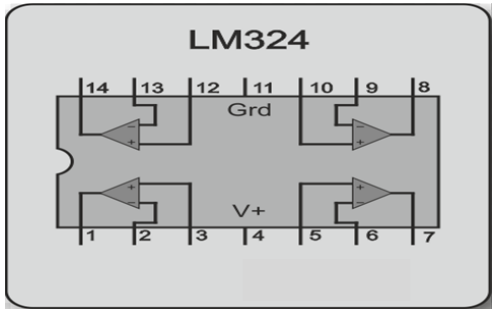

324

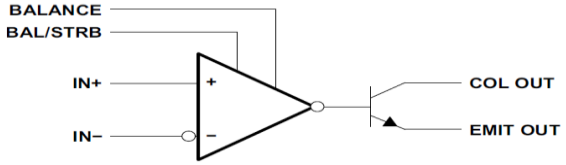

111

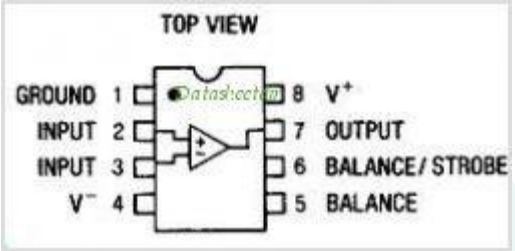

111

LM741 op amp

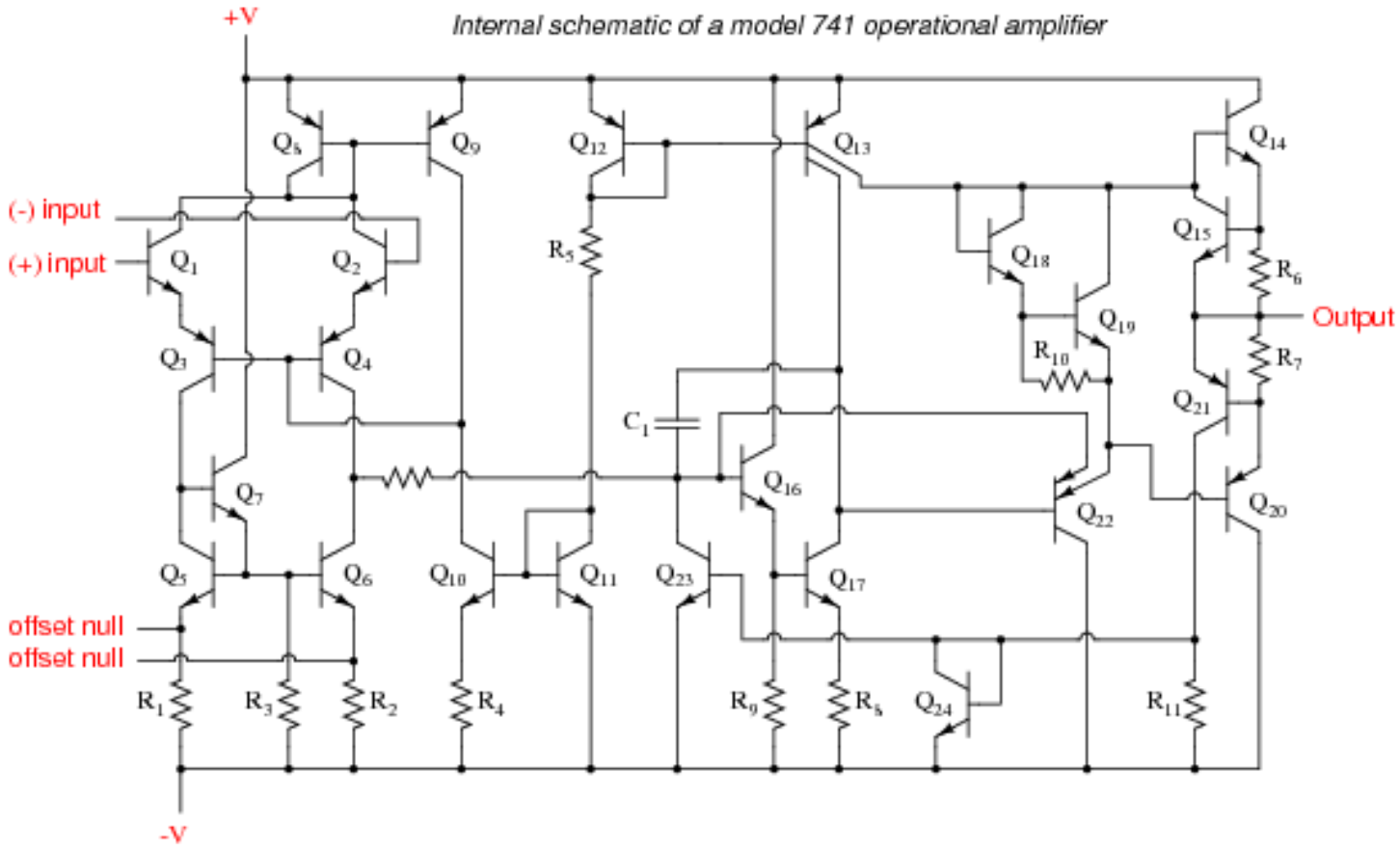
Internal schematic of a model 741 operational amplifier
+V
-V
(-) input
(+) input
offset null
offset null
Output
Q1
Q2
Q3
Q4
Q5
Q6
Q7
Q8
Q9
Q10
Q11
Q12
Q13
Q14
Q15
Q16
Q17
Q18
Q19
Q20
Q21
Q22
Q23
Q24
R1
R2
R3
R4
R5
R6
R7
R8
R9
R10
R11
C1

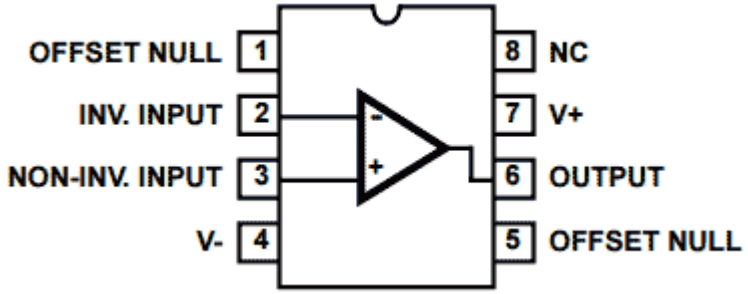
OFFSET NULL
INV. INPUT
NON-INV. INPUT
V-
1
2
3
4
8
7
6
5
NC
V+
OUTPUT
OFFSET NULL

Brief History

- First patent for Vacuum Tube Op-Amp (1946)

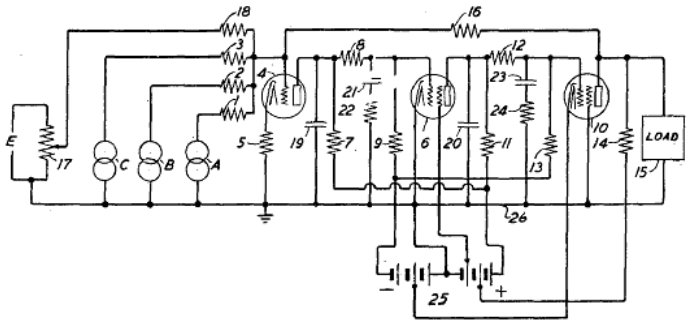

- First Commercial Op-Amp available (1953)

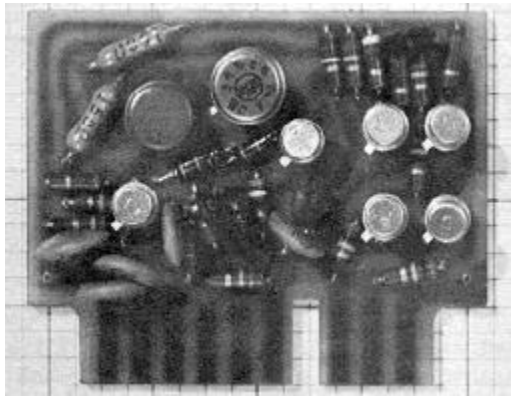

- First discreteTransistor Op-Amps (1961)

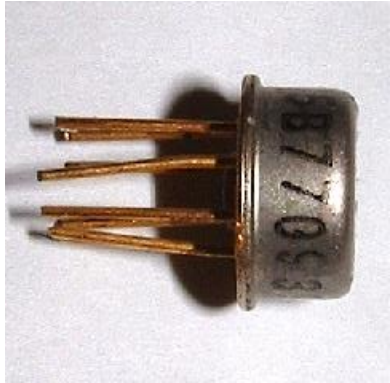

- First commercially successful Monolithic Op-Amps (1965)

History Continued…

- Leading to the advent of the modern IC which is still used even today (1967 – present)

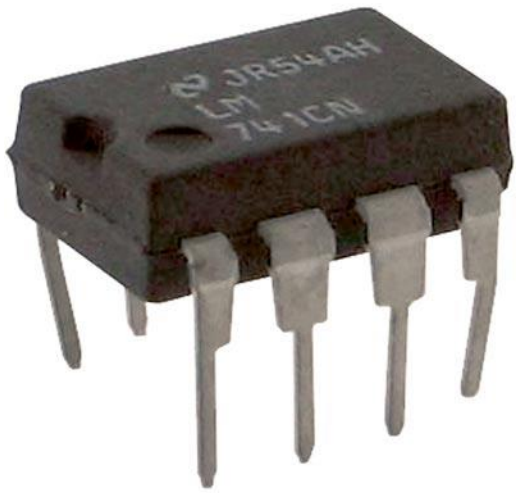

Fairchild µA741

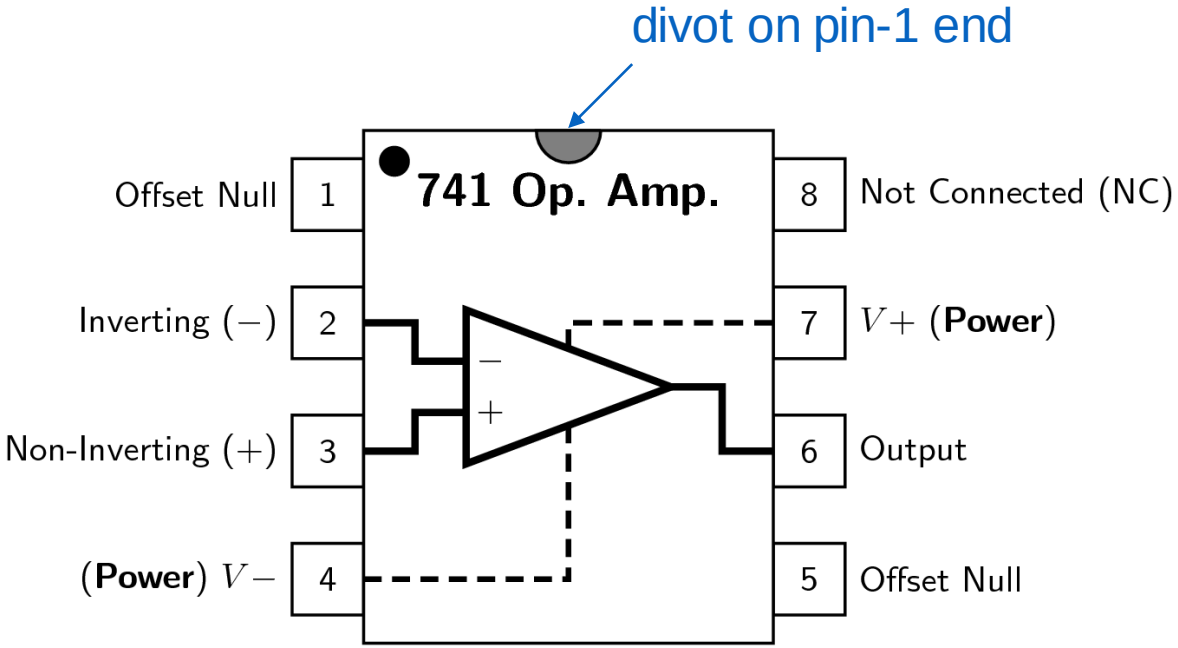

Pin Diagram of µA741

Op-Amps Characteristics

A traditional Op-Amp:

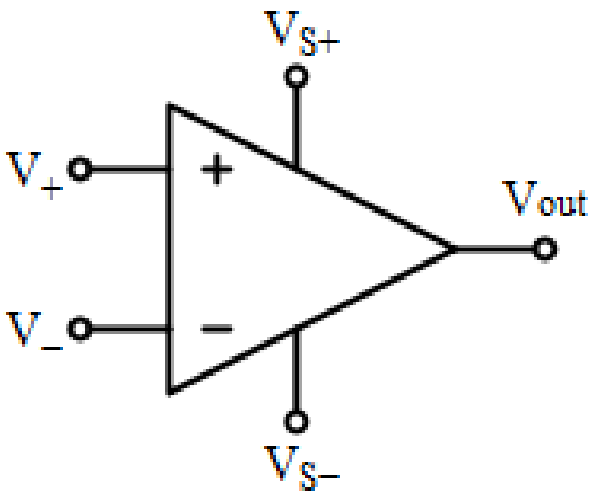

V_+ : non-inverting input
V_- : inverting input
V_{out} : output
V_{s+} : positive power supply
V_{s-} : negative power supply

$$V_{out} = K\,(V_+ - V_-)$$

- The difference between the two inputs voltages (V_+ and V_-) multiplied by the gain (K, "amplification factor") of the Op-Amp gives you the output voltage

- The output voltage can only be as high as the <u>difference</u> between the power supply (V_{s+} / V_{s-}) and ground (0 Volts)

A traditional Op-Amp is basically a differential amplifier

Saturation

Saturation is caused by increasing/decreasing the input voltage to cause the output voltage to equal the power supply's voltage*

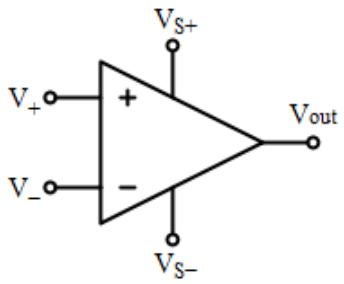

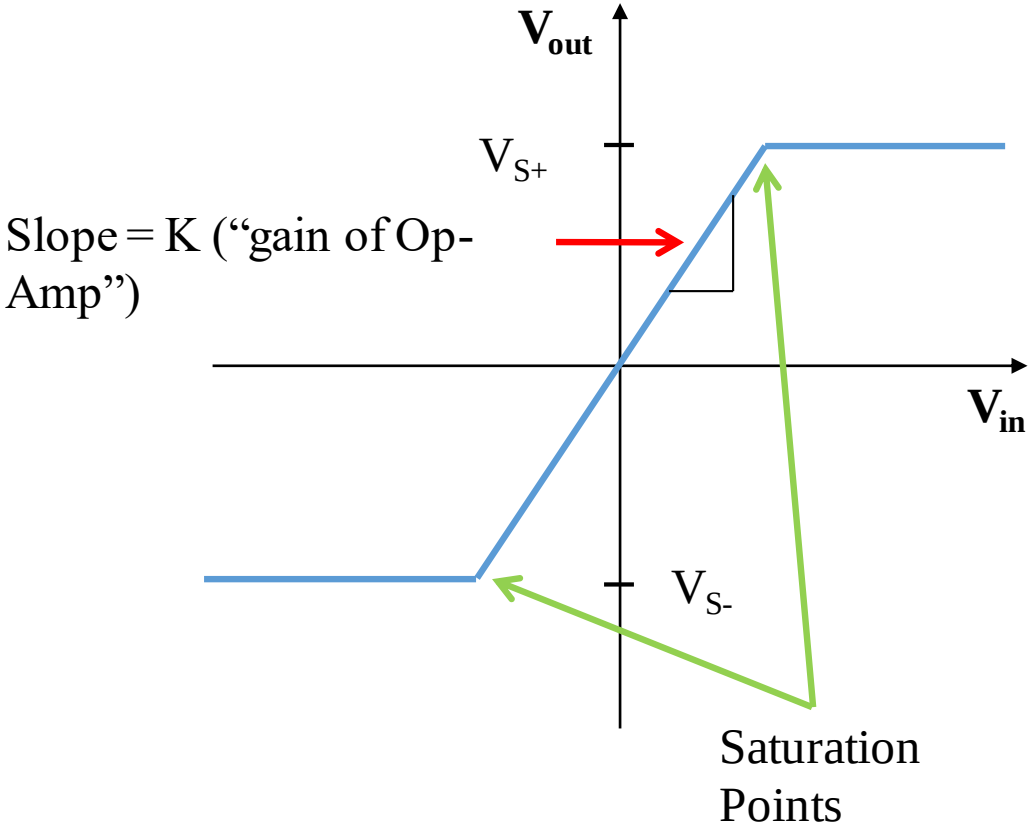

The slope is normally much steeper than it is shown here. Potentially just a few milli-volts (mV) of change in the difference between V_+ and V_- could cause the op-amp to reach the saturation level

* Note that saturation level of traditional Op-Amp is 80% of supply voltage with exception of CMOS op-amp which has a saturation at the power supply's voltage

Presentation Outline

- What is an Op-Amp?
- **Characteristics of Ideal and Real Op-Amps**
- Common Op-Amp Circuits
- Applications of Op-Amps
- References

An Ideal Op-Amp

- Infinite voltage gain (K)
- Infinite input impedance
- Zero output impedance
- Infinite bandwidth
- Zero input offset voltage (i.e., exactly zero out if zero in).

voltage gain is infinite

→ This means the voltage between the inverting and non-inverting terminal (i.e. differential input voltage) is essentially zero for finite output voltage.

Infinite input impedance

→ Input impedance is the ratio of input voltage to input current and is assumed to be infinite to prevent any current flowing from the source supply into the amplifiers input circuitry ($I_{IN} = 0$).

Zero output impedance

→ This means that regardless of the amount of current drawn by an external load, the output voltage of the op amp remains unaffected.

Infinite bandwidth

→ An ideal operational amplifier has an infinite frequency response and can amplify any frequency signal from DC to the highest AC frequencies so it is therefore assumed to have an infinite bandwidth.

Ideal versus Real Op-Amps

Parameter	Ideal Op-Amp	Real Op-Amp
Differential Voltage Gain	∞	10^5 - 10^9
Gain Bandwidth Product (Hz)	∞	1-20 MHz
Input Resistance (R)	∞	10^6 - 10^{12} Ω
Output Resistance (R)	0	100 - 1000 Ω

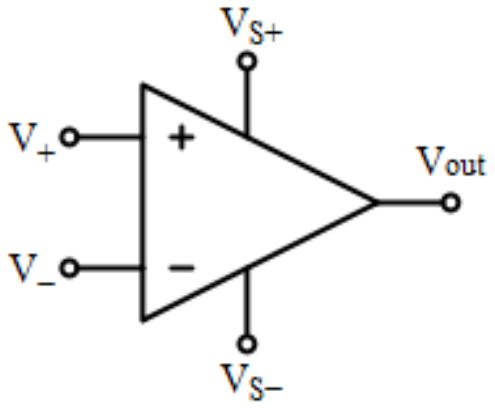

Ideal

Real

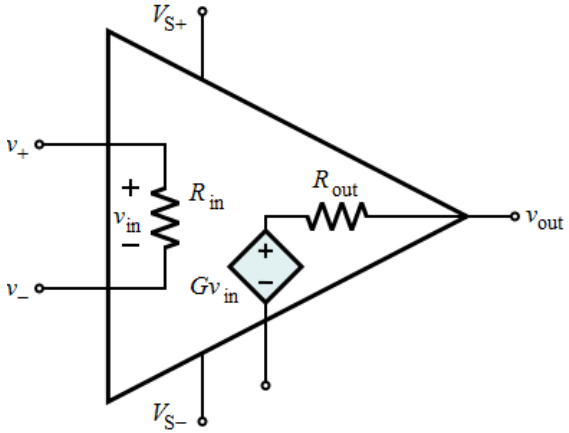

Op-Amp offset voltage and current

- An ideal op-amp is perfectly balanced. i.e. the output $v_0 = 0$ when two inputs are equal (i.e. $v_1 = v_2$). This assumes perfect symmetry between two halves of the differential amplifier used as the input stage of an op-amp.

- In practical op-amp, an unbalanced is caused by the mismatch of inputs transistors. This mismatch causes the flow of unequal bias current through the input terminals and results in a non-zero output voltage without any input voltage. This can be balanced by applying a small d.c. voltage between the input terminals. This voltage is called **input offset voltage**.

- The input offset voltage is usually very small and hence can be neglected in many applications with relatively large input voltages. But there are certain cases, it cannot be neglected and various null adjustments are used.

- The **input offset current** is the difference between the two bias currents entering into the input terminals of a balanced amplifier. The input bias current is defined as the average of two separate currents entering the input terminals of a balanced amplifier.

Presentation Outline

- What is an Op-Amp?
- Characteristics of Ideal and Real Op-Amps
- **Common Op-Amp Circuits**
- Applications of Op-Amps
- References

Basics of an Op-Amp Circuit

- An op-amp amplifies the difference of the inputs V_+ and V_- (known as the differential input voltage)
- This is the equation for an *open loop* gain amplifier:

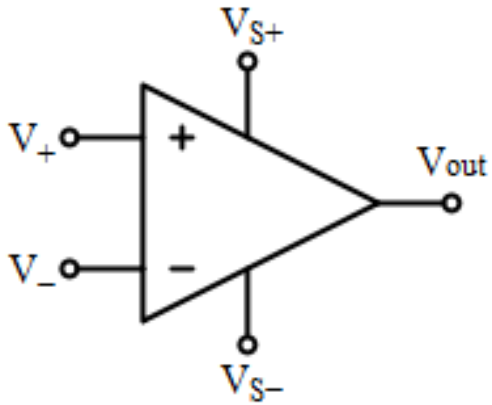

$$V_{out} = K\,(V_+ - V_-)$$

- K is typically very large – at around 10,000 or more for IC Op-Amps
- This equation is the basis for all the types of amps we will be discussing

So if V_+ is greater than V_-, the output goes positive
If V_- is greater than V_+, the output goes negative

Open Loop vs Closed Loop

- A closed loop op-amp has feedback from the output to the input, an open loop op-amp does not have feedback.

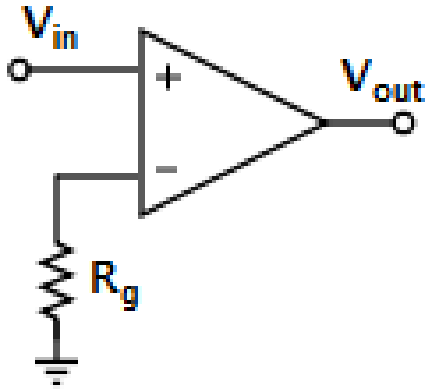

Open Loop

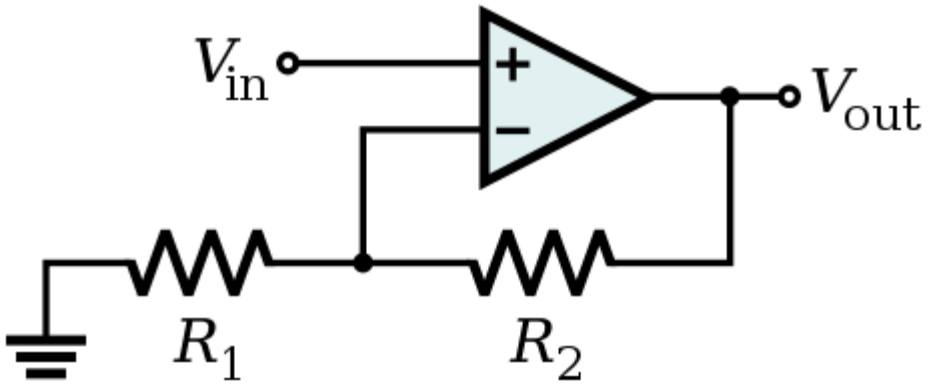

Closed Loop

- Without feedback the operational amplifier has an open-loop operation. This open-loop operation is practical only when the operational amplifier is used as a comparator (a circuit which compares two input signals or compares an input signal to some fixed level of voltage).
- As an amplifier, the open-loop operation is not practical because the very high gain of the operational amplifier creates poor stability. (Noise and other unwanted signals are amplified so much in open-loop operation that the operational amplifier is usually not used in this way.) Therefore, most operational amplifiers are used with feedback (closed-loop operation)

Negative vs. Positive Feedback

- Negative feedback connects the output to the inverting input (-), whereas positive feedback connects the output to the non-inverting input (+).

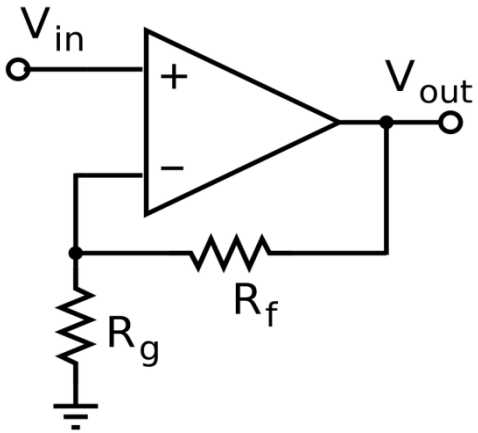

Negative Feedback

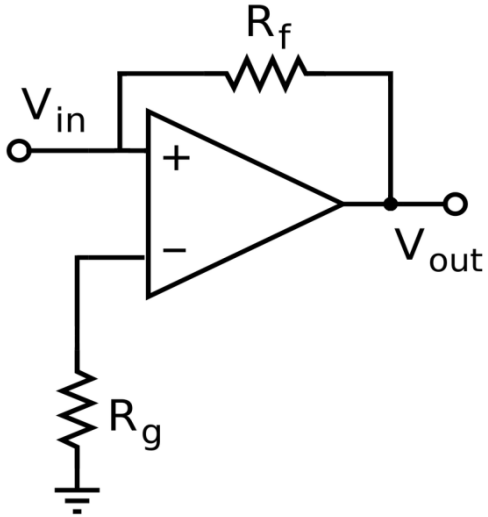

Positive Feedback

Negative vs. Positive: Output

- Negative feedback op-amps can produce any voltage in the supply power range.
- Positive feedback op-amps can only produce the maximum and minimum voltages of the range.

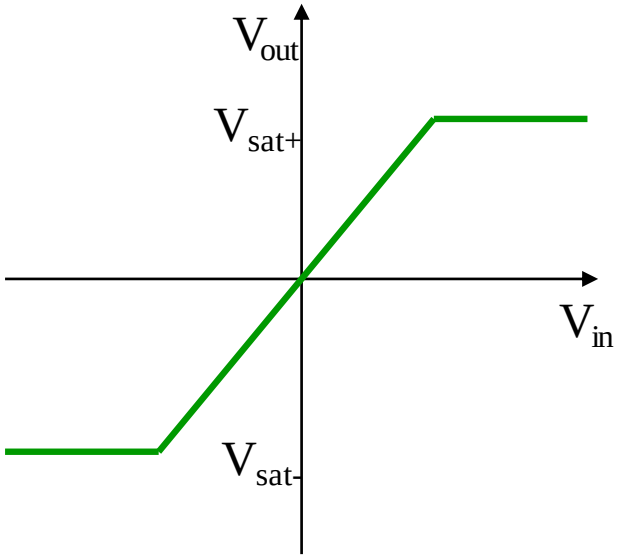

Negative Feedback

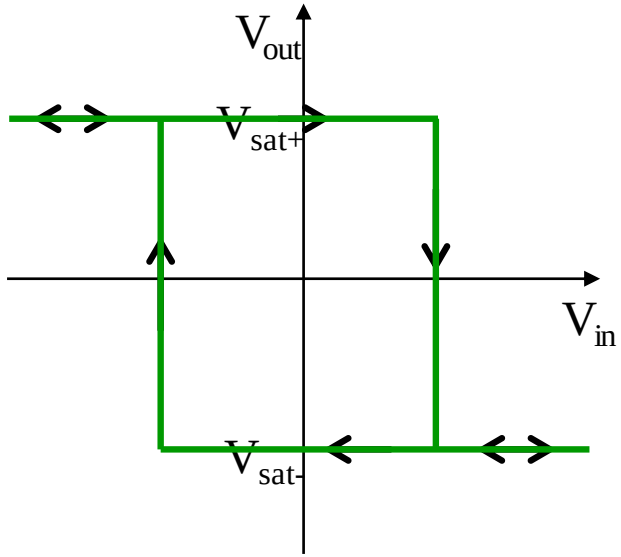

Positive Feedback

negative feedback

- negative feedback makes it self-correcting
- in this case, the op-amp drives (or pulls, if V_{in} is negative) a current through the load until the output equals V_{in}
- so what we have here is a buffer: can apply V_{in} to a load without burdening the source of V_{in} with *any* current!

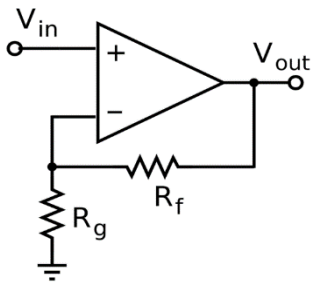

positve feedback

if the + input is even a smidge higher than V_{in}, the output goes way positive

This makes the + terminal even *more* positive than V_{in}, making the situation worse

This system will immediately "rail" at the supply voltage

could rail either direction, depending on initial offset

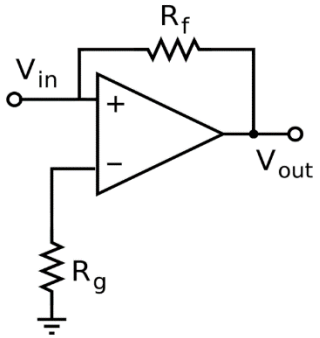

Inverting Op-Amp

- Voltage input is connected to inverting input
- Closed loop op-amp
- Voltage output is connected to inverting input through a feedback resistor
- Non-inverting input is grounded
- Amplifies and inverts the input voltage
- Non-inverting input is determined by *both* voltage input and output
- The polarity of the output voltage is opposite to that of the input voltage

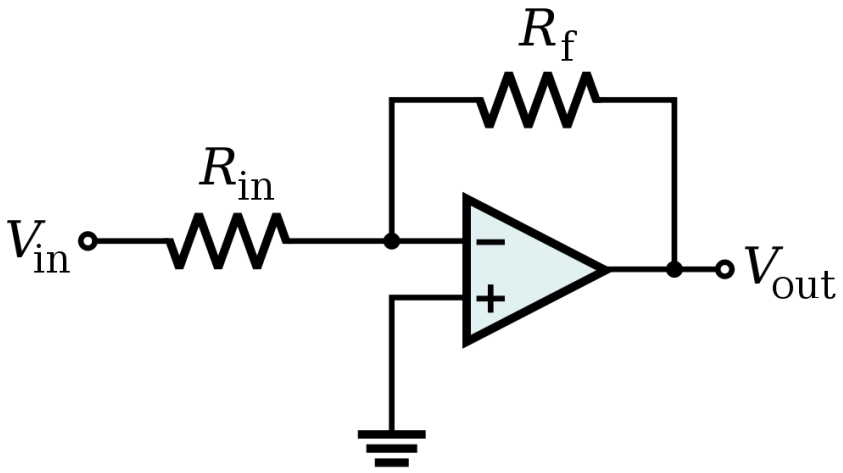

Concept of virtual ground of an inverting op-amp

- The attached Fig. shows the basic circuit of an inverting op-amp which employs negative feedback voltage through R_2. The negative feedback voltage through R_2 tends to cancel the input signal at the point A and tries to keep the point A at the ground potential.

- If vi be the potential at A then output $v_0 = A_V.v_i$ (AV is the gain). Since the open loop gain $|A_V| \rightarrow \infty$, for a finite v_0, we must have $v_i \rightarrow 0$. Further, since the input impedance $R_i \rightarrow \infty$, practically no current enters into the op-amp input terminals.

- Therefore, there is a "**virtual ground**" at the point A. The word virtual is used to imply that the point A is effectively connected to the ground, no current actually flows into this short. Obviously, it is not the actual ground. However, this concept of virtual ground makes the analysis and understanding of many op-amp circuits very simple.

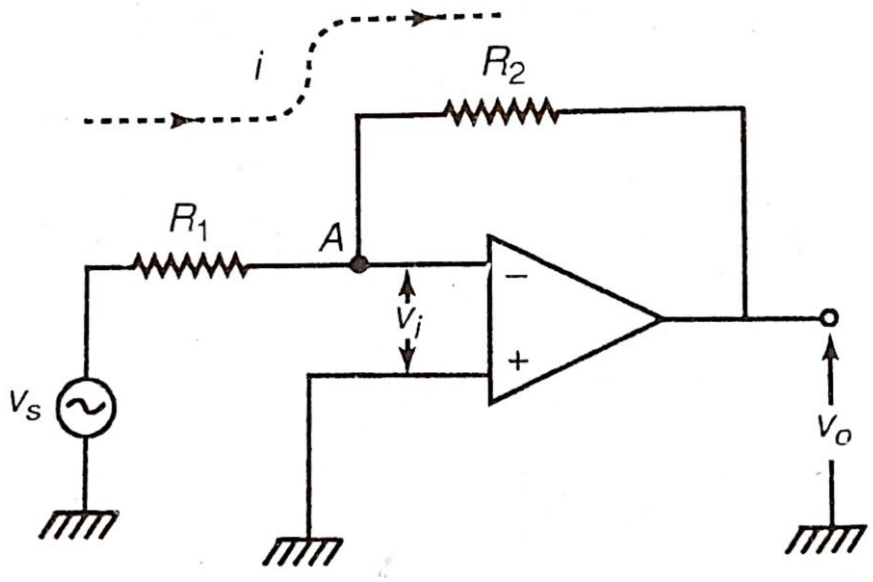

Inverting Op-Amp

<u>Functionality</u>: to amplify the input voltage to output voltage with a negative gain.

Since input resistance of ideal op amp is ideally infinite, no current will flow in op amp input terminals. Gain K is also infinite.

The junction of R_1 and R_2 will be at virtual ground.

Therefore, the current i through R_1 is also the current through R_2

$$\therefore i = \frac{v_s - v_i}{R_1} = \frac{v_i - v_o}{R_2}$$

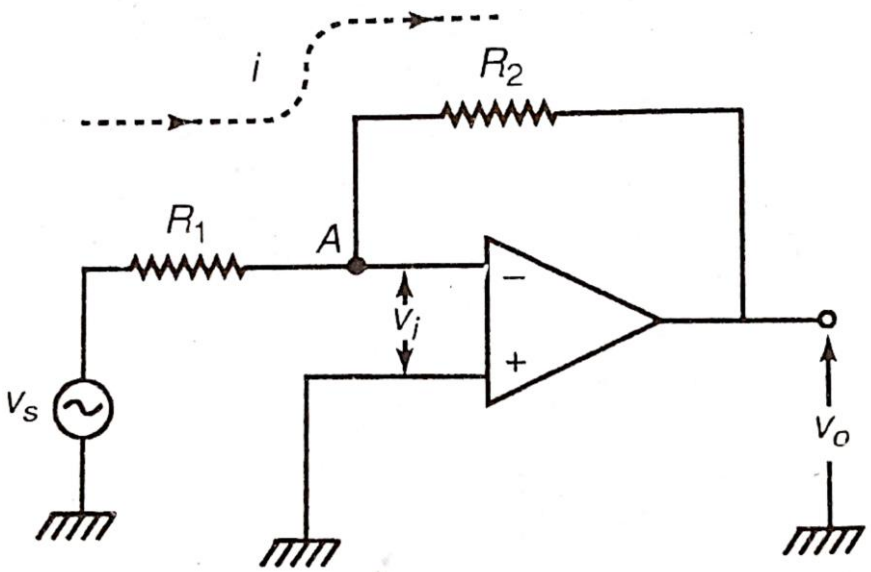

Using the concept of virtual ground,

$$i = \frac{v_s - 0}{R_1} = \frac{0 - v_0}{R_2}$$

So, the closed-loop gain of the inverting op-amp is $\frac{v_0}{v_s} = -\frac{R_2}{R_1}$

The '–ve' sign indicates the output is 180° out of phase with the input. The gain depends on the ratio of the two resistors R_1 and R_2 and is independent of the op-amp parameters.

Inverting Op-Amp

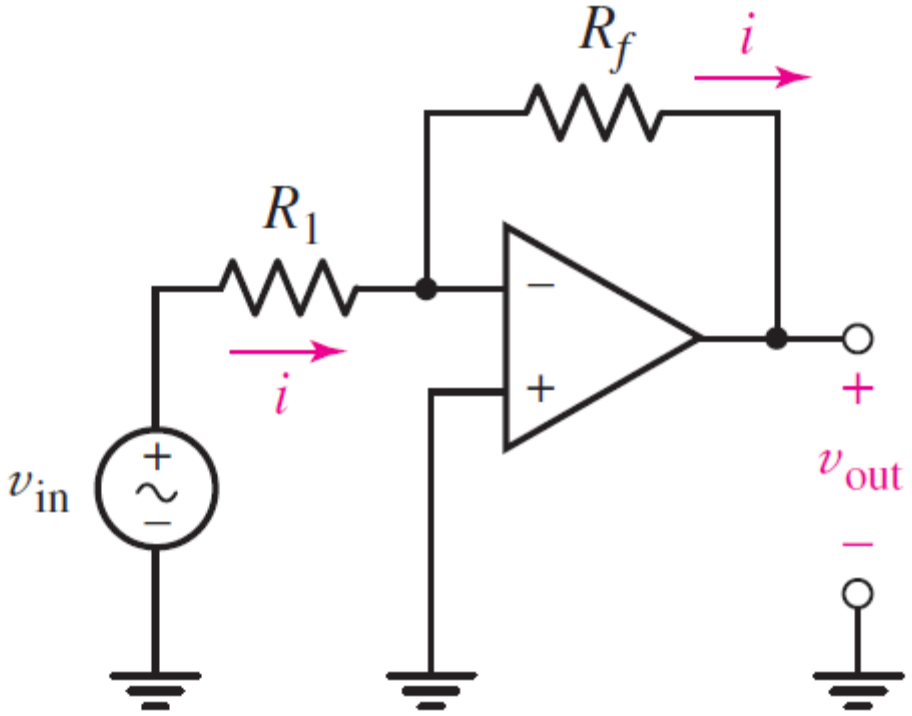

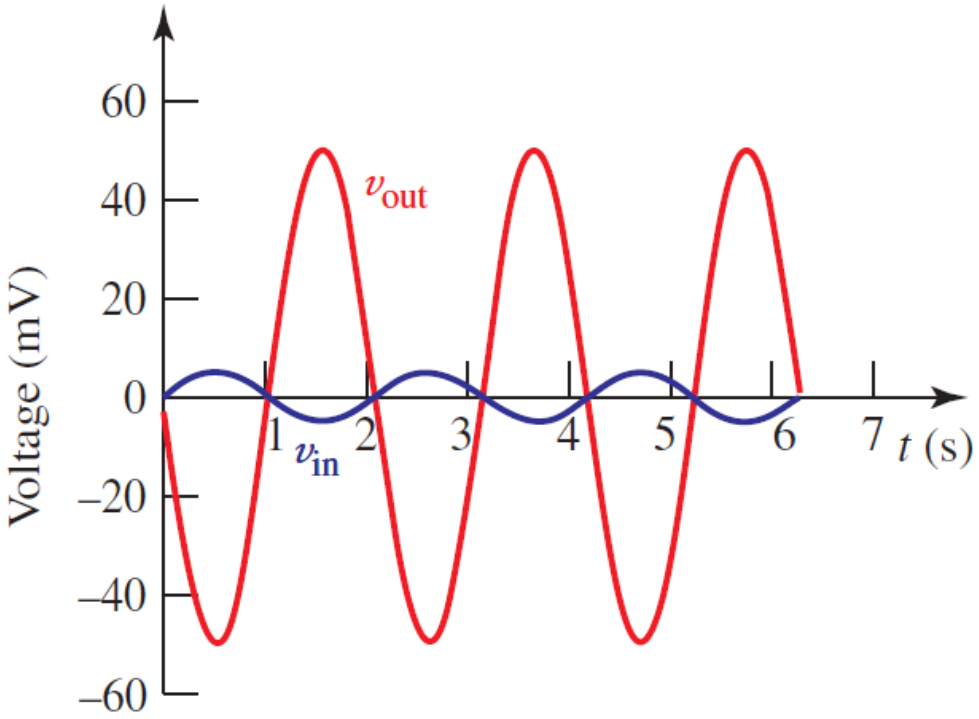

Scale changer

If R_1 and R_2 are two accurately known resistors, then the output

$$v_0 = -\frac{R_2}{R_1} v_s = -K v_s$$

where $K = R_2/R_1$ is an accurately known constant. Thus the circuit multiplies the input by –K, called the scale factor.

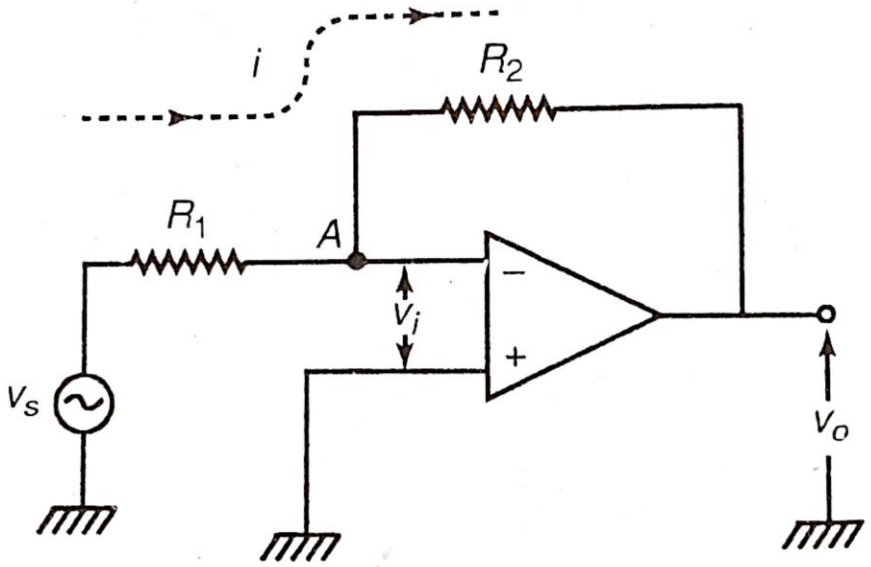

Phase shifter

If R_1 and R_2 are replaced by impedances Z_1 and Z_2, then like before

$$\frac{v_0}{v_s} = -\frac{Z_2}{Z_1}$$

If Z_1 and Z_2 are chosen to have equal magnitude but different phases, then we can write

$$\frac{v_0}{v_s} = -\frac{|Z_2|e^{j\varphi 2}}{|Z_1|e^{j\varphi 1}} = e^{j(\pi+\varphi 2-\varphi 1)}$$

where φ1 and φ2 are the phase angles. Thus op-amp can shift the phase of input voltage v_s by the angle (π+ φ2- φ1) which can have any value between 0 to 360°, while at the same time the amplitude of the input remains unchanged.

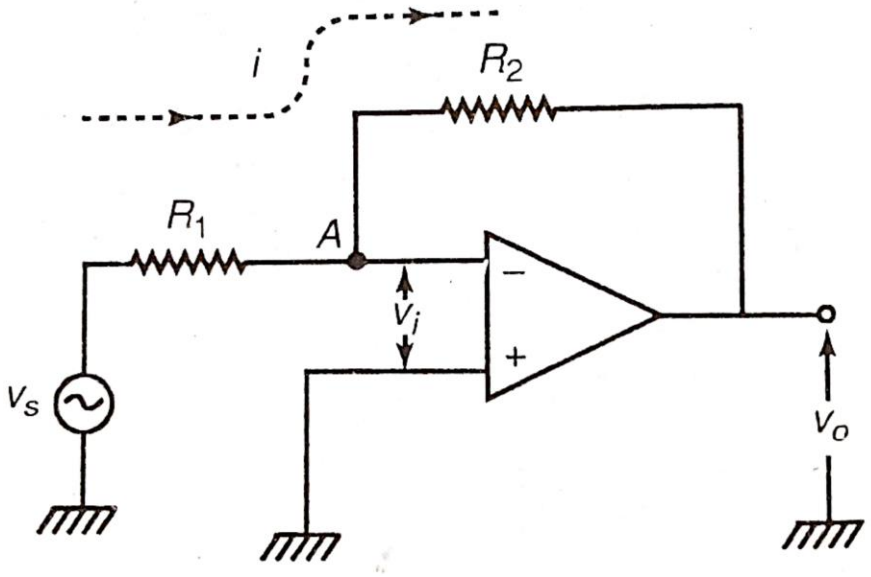

Non-Inverting Op-Amp

Functionality: to amplify the input voltage to output voltage with a positive gain. Here, the signal is applied to the non-inverting terminal.

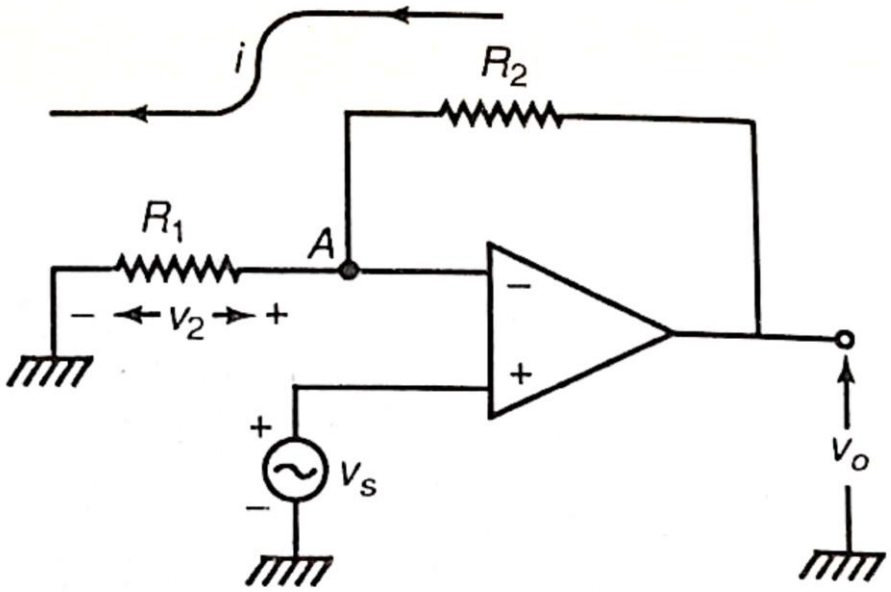

- If, v_2 is the potential at point A, then the differential input is $(v_s\text{-}v_2)$. So, the output voltage is $v_0 = A_V(v_s\text{-}v_2)$.

- For a finite v_0, we must have $v_2 = v_s$. Thus there is a "**virtual short**" at the input terminals of the op-amp.

- Since, the input impedance of op-amp tends to infinite, practically no current enters into the op-amp. So same current passes through R_1 and R_2. Thus

$$\frac{v_0 - v_2}{R_2} = \frac{v_2 - 0}{R_1}$$

$$\frac{v_0}{v_s} = \frac{v_0}{v_2} = 1 + \frac{R_2}{R_1}$$

The output v_0 is in phase with input v_s. This circuit acts as non-inverting amplifier with gain **$(1 + R_2/R_1)$.**

Unity gain follower or voltage follower

In non-inverting amplifier in previous slide, if we choose $R_1 = \infty$ and/or $R_2 = 0$, then closed loop gain $v_0/v_2 = 1$.

The amplifier then acts as a voltage follower i.e. a non-inverting amplifier with unity gain.

It has practically infinite input resistance and zero output resistance. So, the circuit can be used as buffer of isolation amplifier. It allows the input voltage to be transferred to the output without any change and at the same time avoids the loading of the source.

In other words, it can be used as an impedance marching device between a high impedance source and a low impedance load

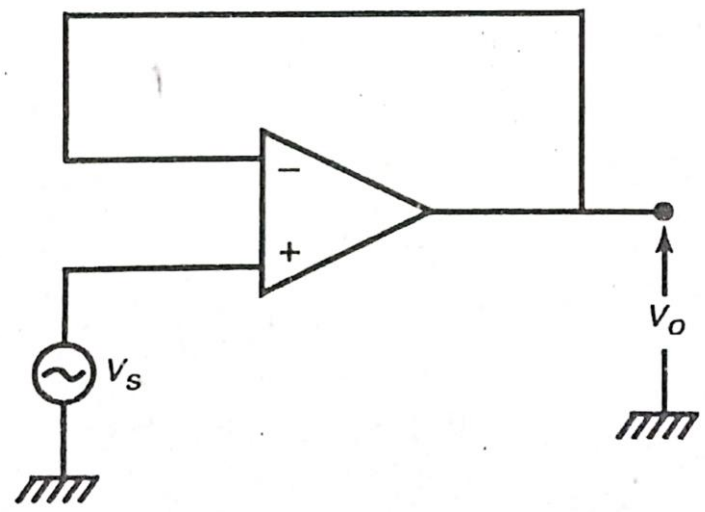

Adder or summing amplifier

This circuit shows an op-amp adder which provides a mean of algebraically adding a number of voltages, each multiplies by a constant gain factor. Since the point A may be treated as virtual ground, we can write

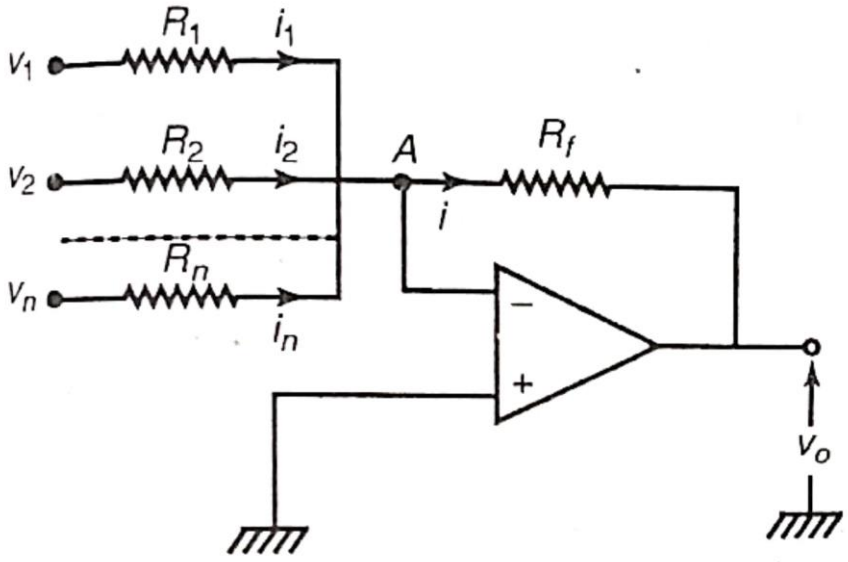

$$i_1 + i_2 \cdots + I_n = i$$

$$\text{or} \quad \frac{v_1}{R_1} + \frac{v_2}{R_2} + \cdots + \frac{v_n}{R_n} = -\frac{v_0}{R_f}$$

$$\therefore \quad v_0 = -\left(\frac{R_f}{R_1}v_1 + \frac{R_f}{R_2}v_2 + \cdots + \frac{R_f}{R_n}v_n\right)$$

If $R_1 = R_2 = \cdots = R_n$ then

$$v_0 = -\frac{R_f}{R_1}(v_1 + v_2 + \cdots + v_n)$$

Thus, the output is proportional to the algebraic sum of the inputs.

Summing amplifier – Non-inverting configuration

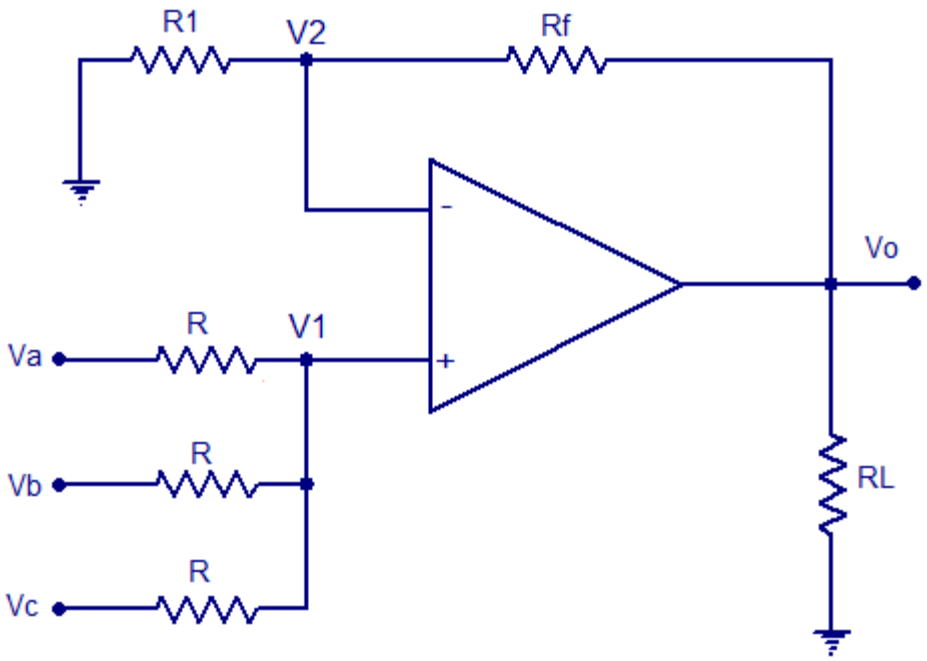

Summing amplifier non inverting configuration

Differential amplifier

This is circuit of and differential amplifier which amplifies the difference between the input signals v_1 and v_2.
Since the open loop gain and input impedance are infinite, there exists a virtual short circuit at the input terminals of the op-amp.
So the potentials v_a and v_b are equal as shown in the circuit.
Also, same current flows through R_1 and R_2.
Therefore,

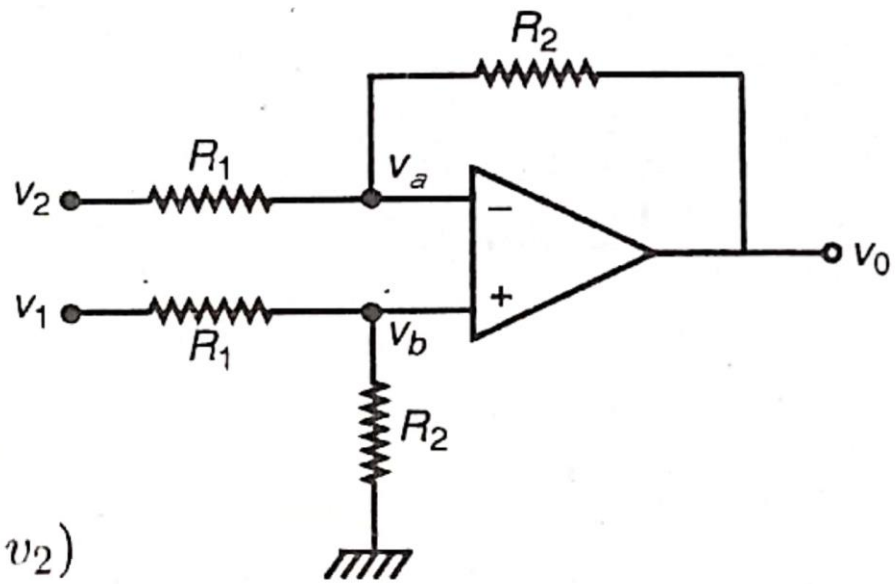

$$\frac{v_2 - v_a}{R_1} = \frac{v_a - v_0}{R_2} \qquad (1)$$

$$\frac{v_1 - v_b}{R_1} = \frac{v_b - 0}{R_2} \qquad (2)$$

Putting $v_a = v_b$, and subtracting eq. (2) from (1), we get, $v_0 = \frac{R_2}{R_1}(v_1 - v_2)$

Thus, the circuit amplifies the difference of two input signals.

Subtractor: If we choose $R_1 = R_2$, then we get $v_0 = (v_1 - v_2)$, then the circuit acts as a subtractor

Integrator

The output of this circuit is proportional to the integration of input signal.
Here A is a virtual ground, so same current flows through R and C.
Therefore,

$$i = \frac{v_s - 0}{R} = \frac{dq}{dt} = -\frac{d}{dt}(Cv_0)$$

where, we take $q = C(0-v_0)$ as the instantaneous charge on the capacitor.

So, the output voltage is,

$$v_o = -\frac{1}{CR}\int v_s dt$$

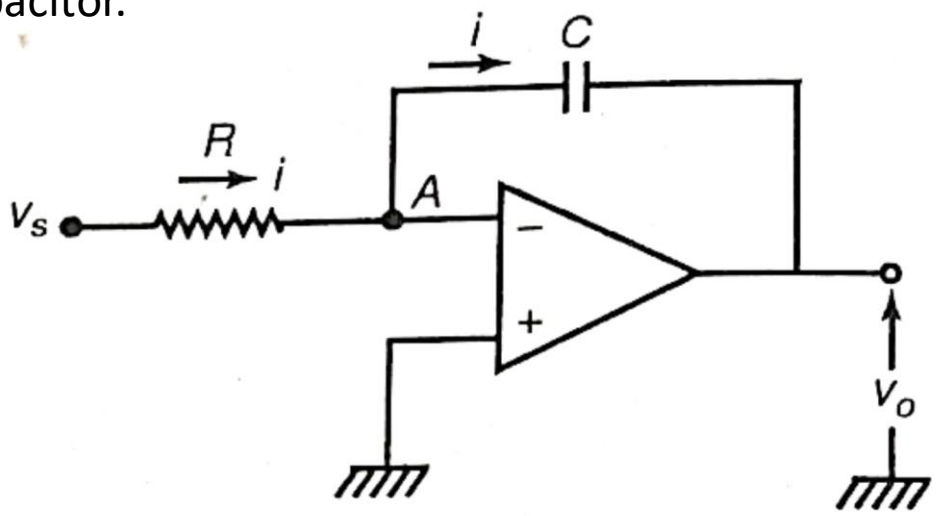

The output is the integration of the input signal

Op-Amp Integrator

- An integrating op-amp circuit can create a sawtooth signal if a square wave is applied at V_{in}

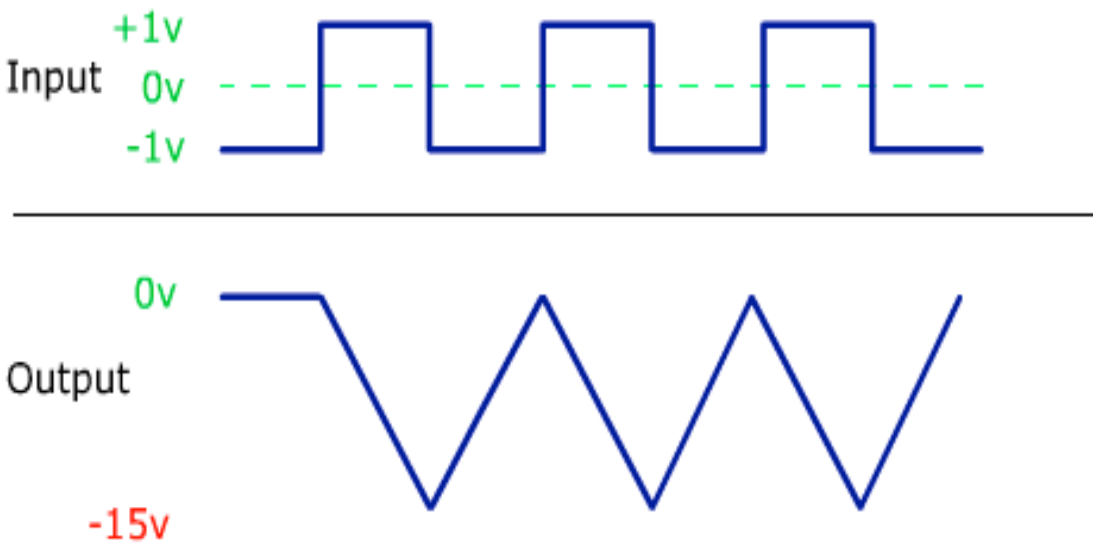

Differentiator

Output is proportional to the time derivative of the input.

Since, A can be treated as virtual ground and practically same current flows through C and R, so

$$i = \frac{dq}{dt} = \frac{d}{dt}(Cv_s) = \frac{0 - v_0}{R}$$

Where q = Cv_s is the instantaneous charge on the capacitor.

Therefore,

$$v_o = -CR\frac{dv_s}{dt}$$

The output is the time derivative of the input signal

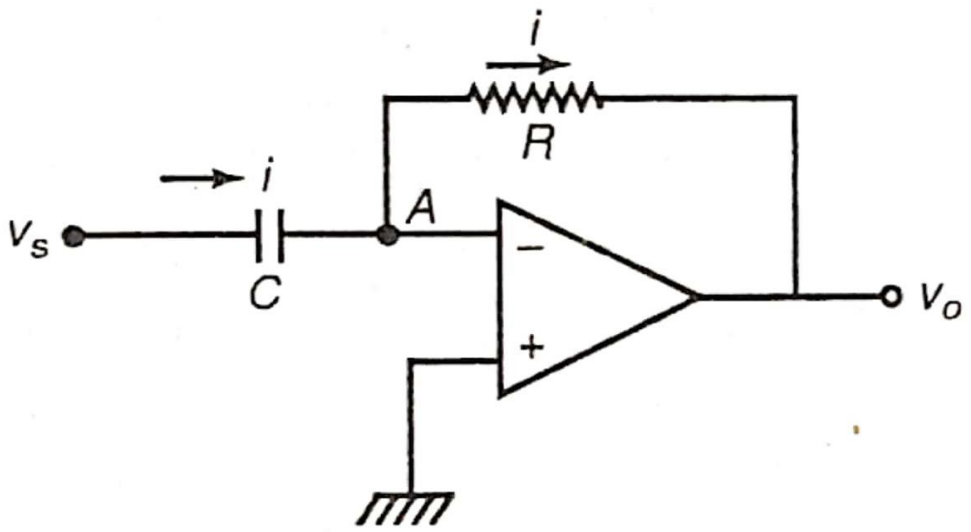

Voltage to current converter

Very often, it is necessary to convert a voltage signal to a proportional output current. A non-inverting amplifier can be used for this purpose.

Since the potential at the point A tends to the input voltage vs, the current through R_1 is $i = v_s/R_1$

Almost the same current flows through R_2 and thus the current R_2 is independent of R_2 and is proportional to the input voltage v_s.

This circuit can be used as a voltage to current converter.

Such a circuit is used in driving the deflection coil in a television tube

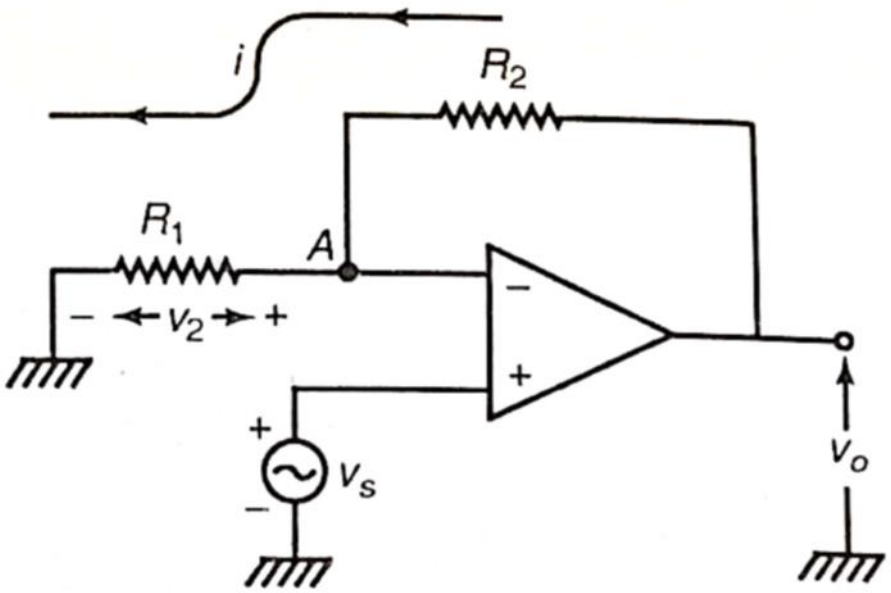

Current to voltage converter

This is a current to voltage converter circuit in which the output is proportional to the input current.

Since, A is virtual ground, whole input signal i_s passes through the feedback resistor R. Thus,

$$v_0 = -i_s R$$

Obviously, the output voltage is proportional to the input current

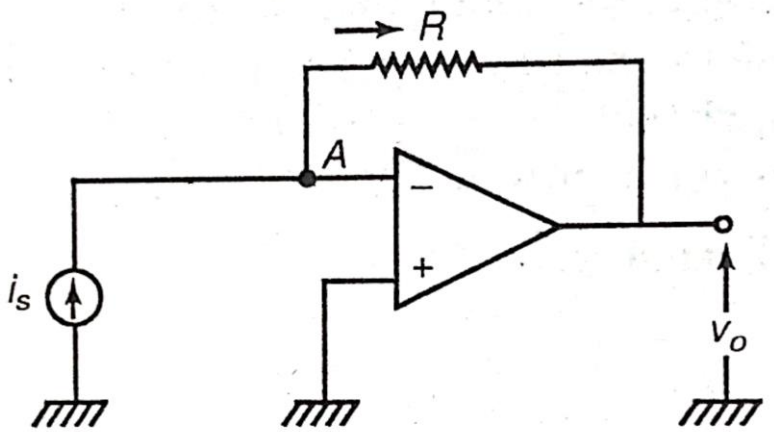

Voltage comparator and square wave generator

Comparator is a circuit which can compare two voltages. In this circuit, input signal v_s can be compared with a reference voltage V_R. When $v_s < V_R$, the output goes to maximum positive saturation value ($+V_{sat}$).

When v_s crosses V_R towards the region $v_s > V_R$, the op-amp output switches to the negative saturation value ($-V_{sat}$).
Thus by looking at the output voltage we can instantly identify whether vs is greater or less than V_R

The comparator circuit can be used to generate a symmetric square wave from sine wave by just taking $V_R = 0$ and choosing v_s as the sinusoidal wave.

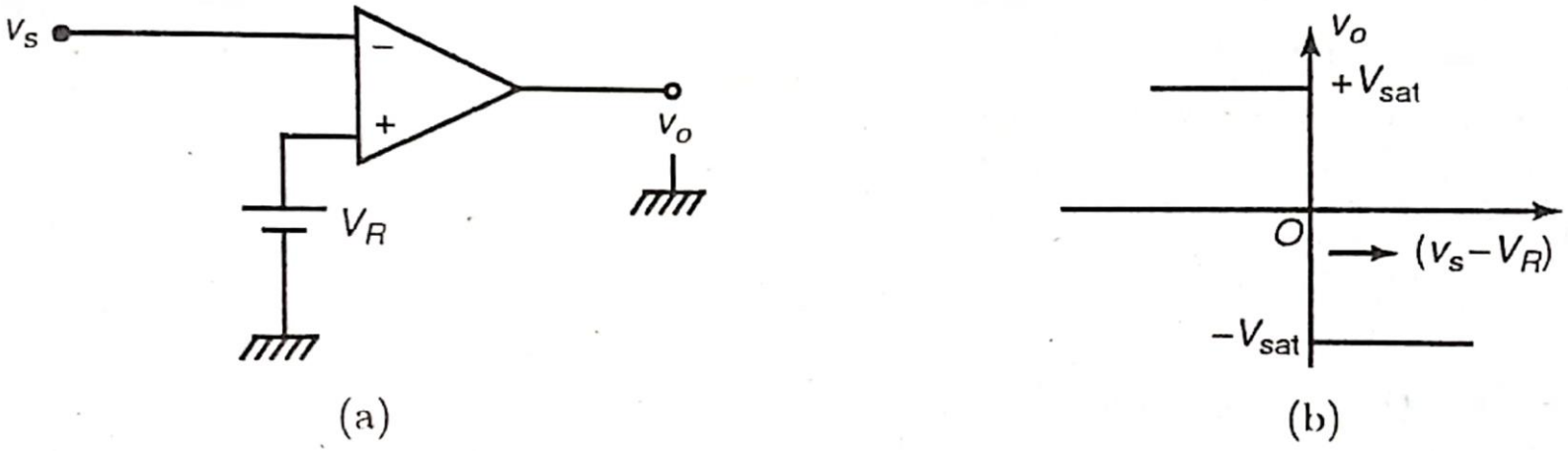

Voltage comparator (a) circuit (b) output

Logarithmic and exponential amplifier

Since, there is a virtual ground at A, and almost same current passes through R and the diode

$$I_s = I_f \quad \text{or,} \quad \frac{V_s - 0}{R} = I_0\left(e^{\frac{eV_f}{\eta KT}} - 1\right)$$

$$\approx I_0 e^{\frac{eV_f}{\eta KT}}$$

$$V_0 = -V_f = -\frac{\eta KT}{e} \ln \frac{V_s}{I_0 R}$$

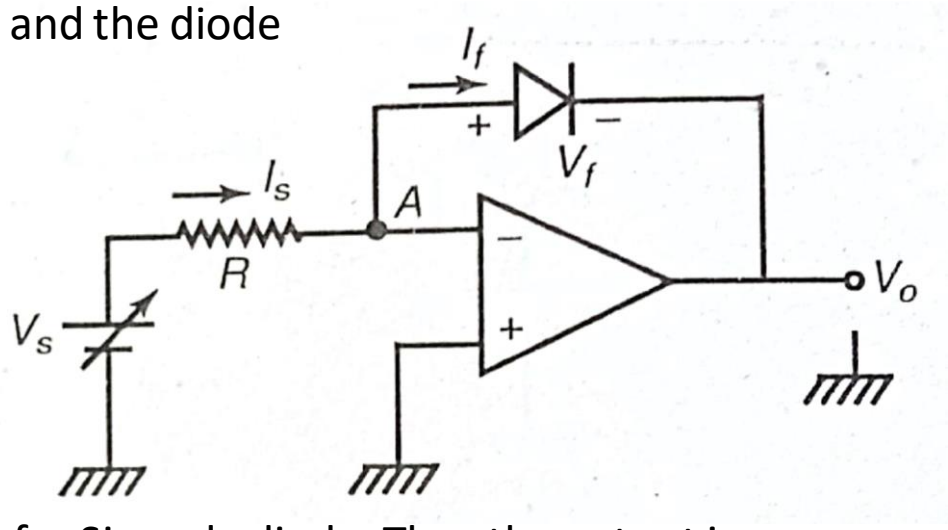

where I_0 is the reverse saturation current and η = 1 for Ge and approximately 2 for Si-made diode. Thus the output is proportional to the logarithm of the input voltage.

Exponential amplifier

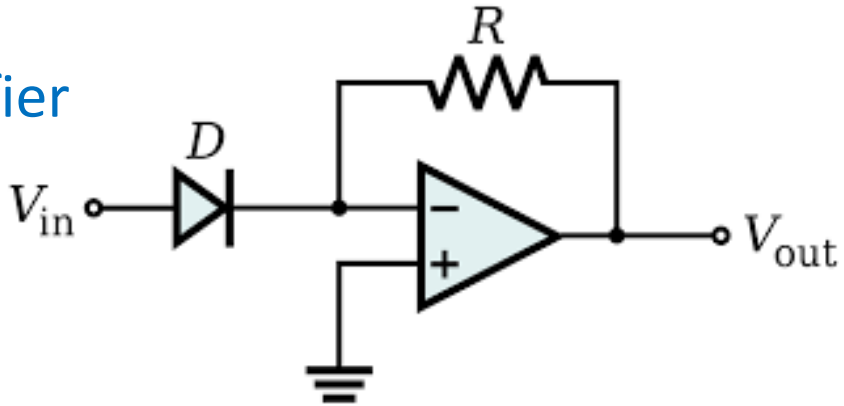

Cascaded stages

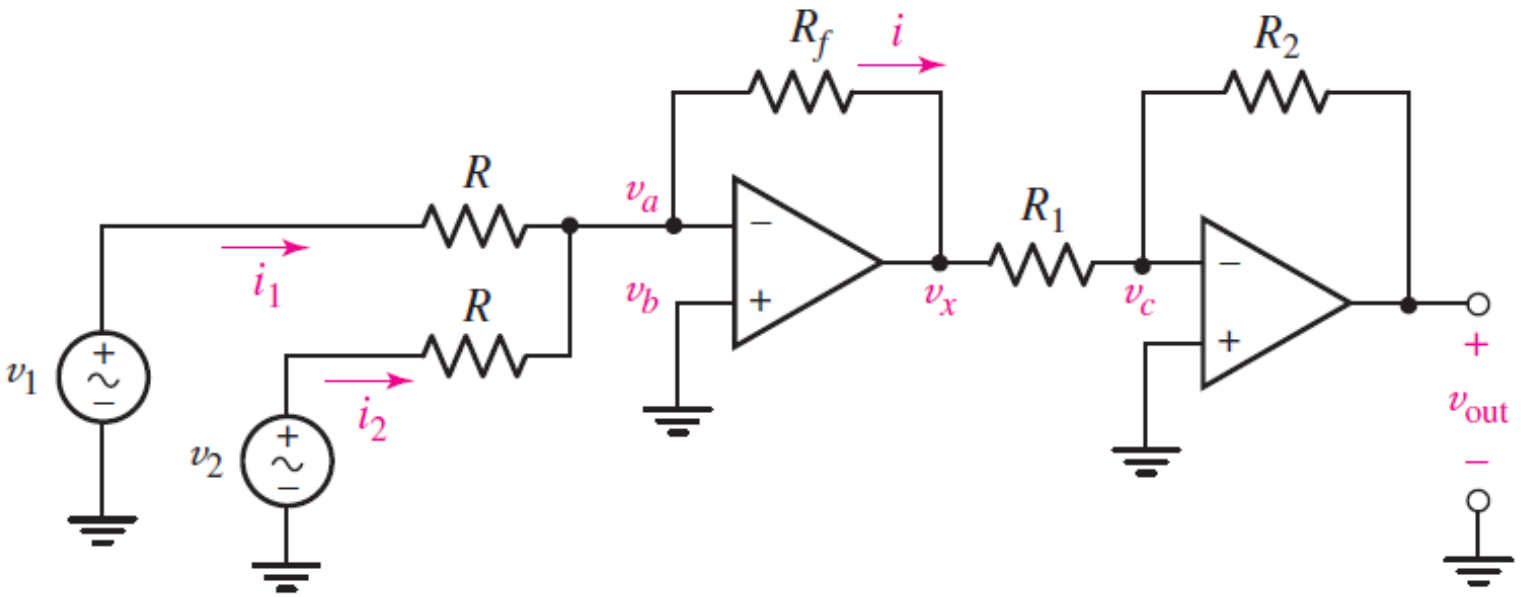

$$v_x = -\frac{R_f}{R}(v_1+v_2)$$

$$v_{out} = -\frac{R_2}{R_1} v_x$$

$$= \frac{R_2}{R_1}\frac{R_f}{R}(v_1+v_2)$$

Exercise

Draw a circuit using one or more op-amp whose output v_0 is given as $v_0 = 4v_1 + 6v_2$, where v_1 and v_2 are the input signals

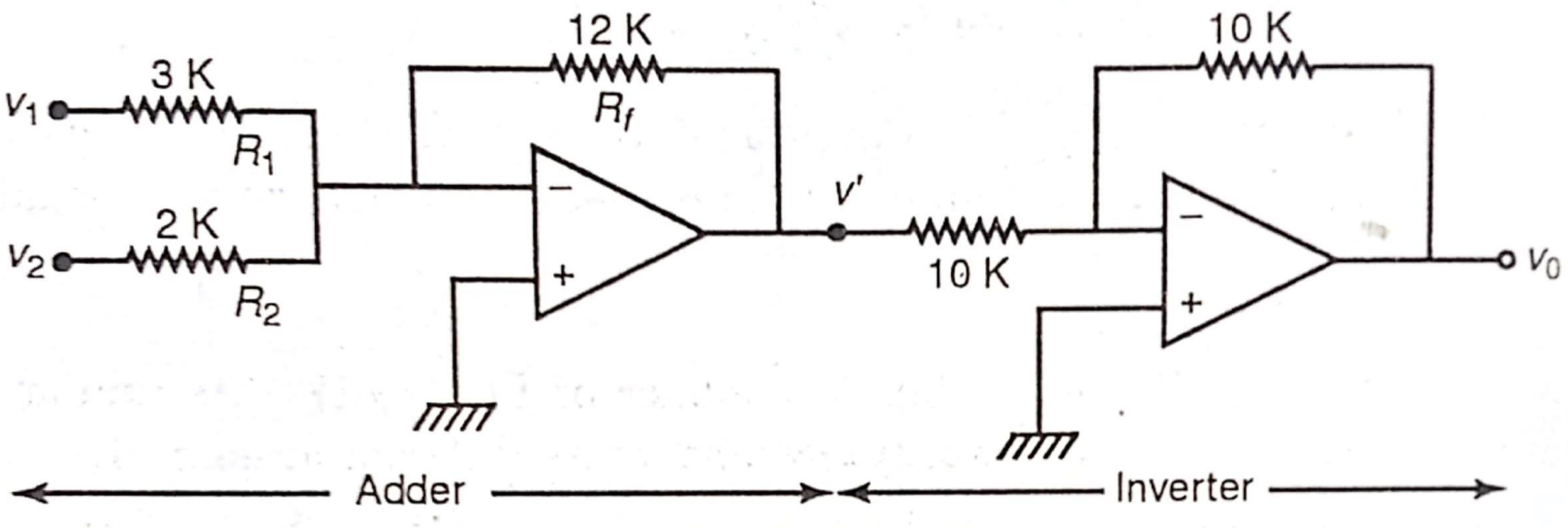

$$v' = -\left(\frac{R_f}{R_1}v_1 + \frac{R_f}{R_2}v_2\right) = -(4v_1 + 6v_2)$$

Now the inverter output $v_0 = -v' = 4v_1 + 6v_2$

Instrumentation amplifier using op-amp

Instrumentation amplifier is a kind of differential amplifier with additional input buffer stages. The addition of input buffer stages makes it easy to match (impedance matching) the amplifier with the preceding stage.

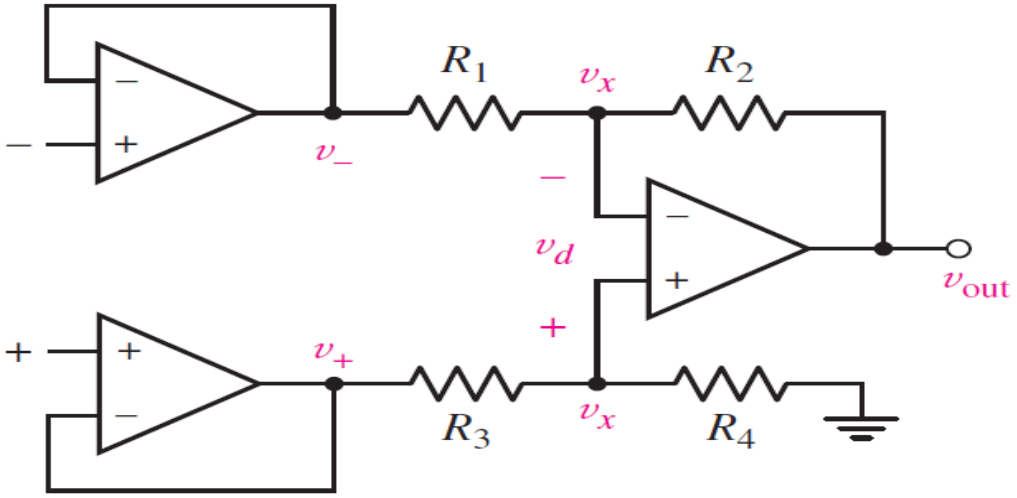

$$\frac{v_x - v_-}{R_1} + \frac{v_x - v_{out}}{R_2} = 0 \quad \text{— (I)}$$

$$\frac{v_x - v_+}{R_3} + \frac{v_x}{R_4} = 0 \quad \text{— (II)}$$

$$v_x = \frac{v_+}{1 + \frac{R_3}{R_4}}$$

$$v_{out} = \frac{R_4}{R_3}\left(\frac{1 + R_2/R_1}{1 + R_4/R_3}\right) v_+ - \frac{R_2}{R_1} v_-$$

$$\frac{R_4}{R_3} = \frac{R_2}{R_1} = K$$

$$v_{out} = K(v_+ - v_-)$$

ECE 113- Basic Electronics

Lecture week 12: Op-Amp

Dr. Ram Krishna Ghosh, Assistant Professor

Office: B601, Research and Development Block

Email: rkghosh@iiitd.ac.in

INDRAPRASTHA INSTITUTE *of*
INFORMATION TECHNOLOGY
DELHI

PROB: Find the output voltage (V_o).

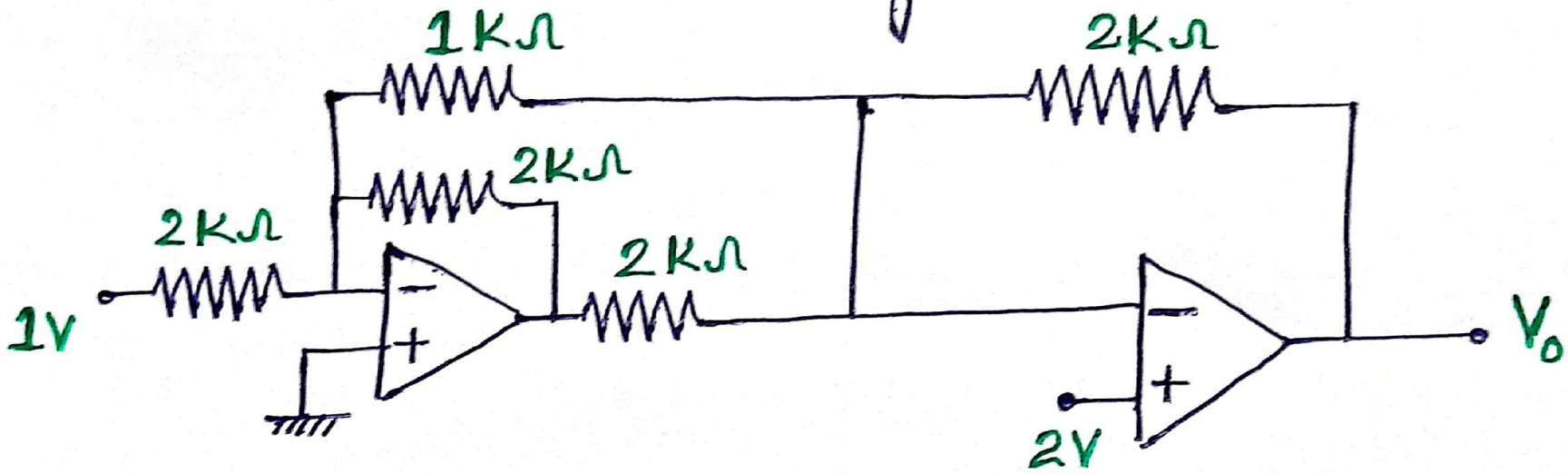

PROB:-

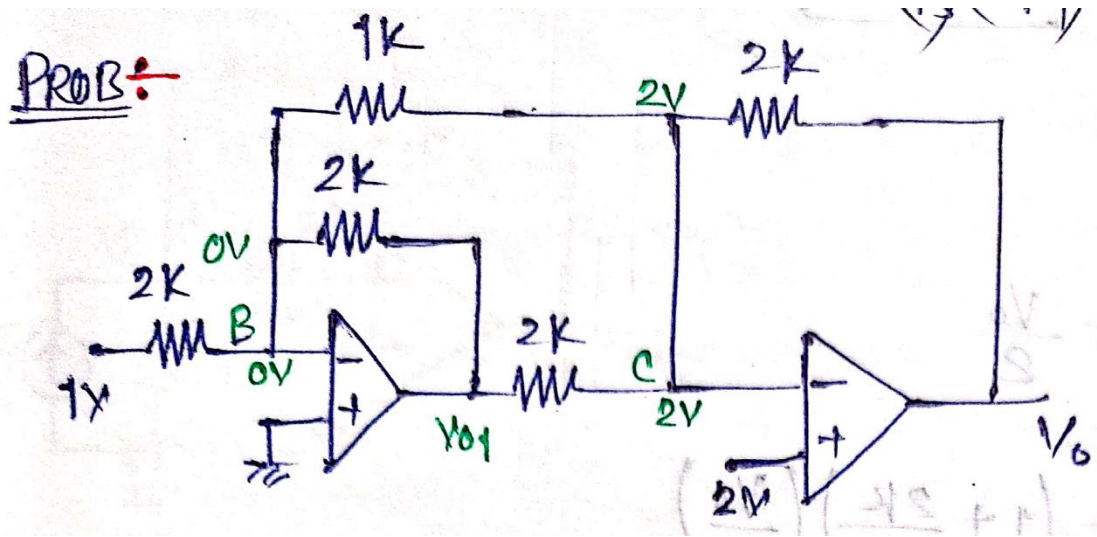

KCL at node B –

$$\frac{0-1}{2K} + \frac{0-2}{1K} + \frac{0-V_{o1}}{2K} = 0$$

$$-1 - 4 - V_{o1} = 0$$

$$\boxed{V_{o1} = -5V}$$

KCL at node C –

$$\frac{2-V_{o1}}{2K} + \frac{2-V_o}{2K} + \frac{2-0}{1K} = 0$$

$$V_o = 4 + 5 + 4 = 9V + 4V = 13V$$

$$\boxed{V_o = 13V}$$

PROB: Find the output voltage (V_o) in terms of input voltage (V_i).

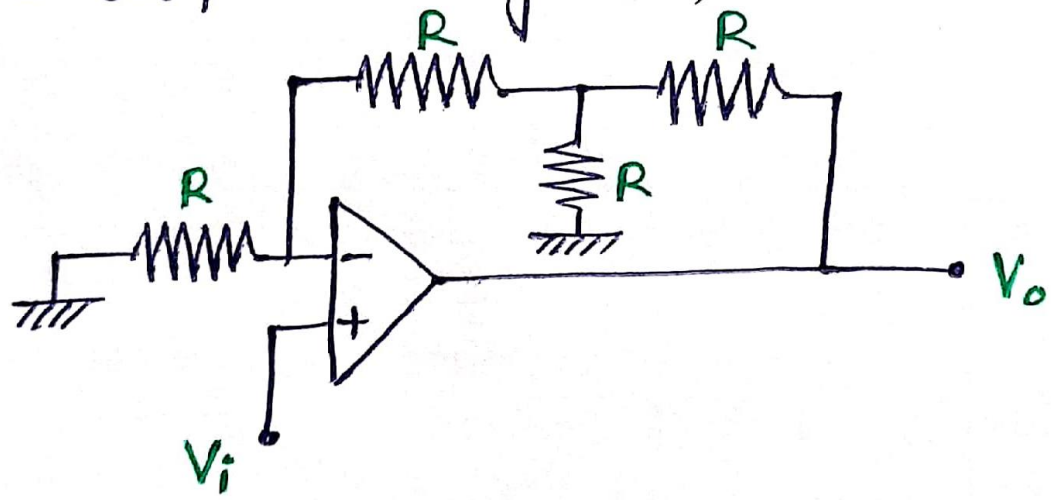

PROB:-

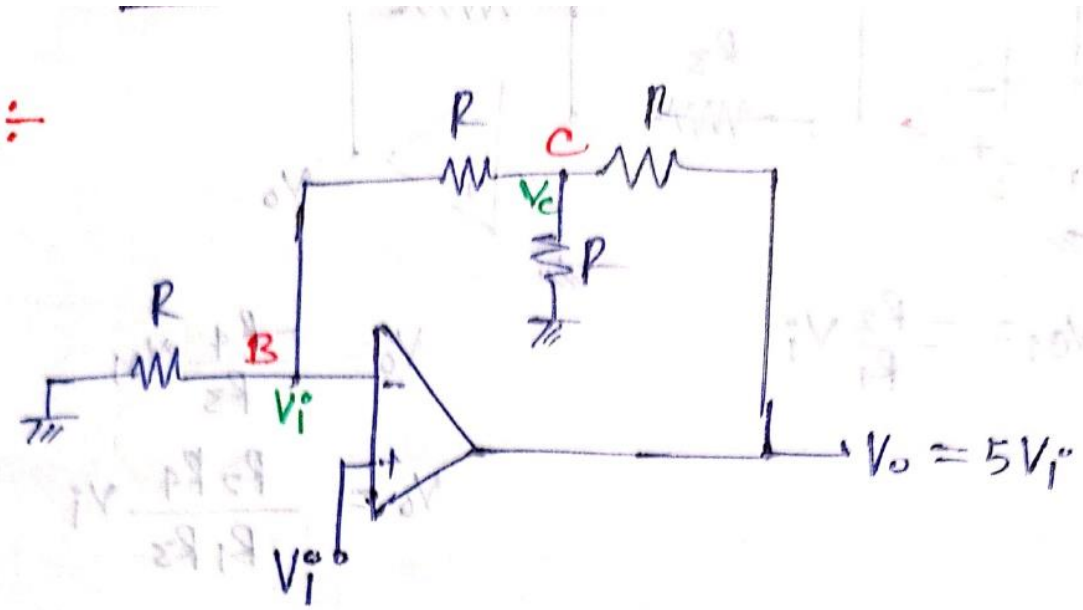

KCL at node B —

$$\frac{V_i - 0}{R} + \frac{V_i - V_c}{R} = 0$$

$$2\frac{V_i}{R} = \frac{V_c}{R}$$

$$V_c = 2V_i \quad \text{—— (1)}$$

KCL at node C —

$$\frac{V_c - 0}{R} + \frac{V_c - V_i}{R} + \frac{V_c - V_o}{R} = 0$$

$$3V_c - V_i = V_o$$

$$V_o = 3(2V_i) - V_i = 5V_i$$

$$\boxed{V_o = 5V_i}$$

PROB: Find the output voltage (V_o).

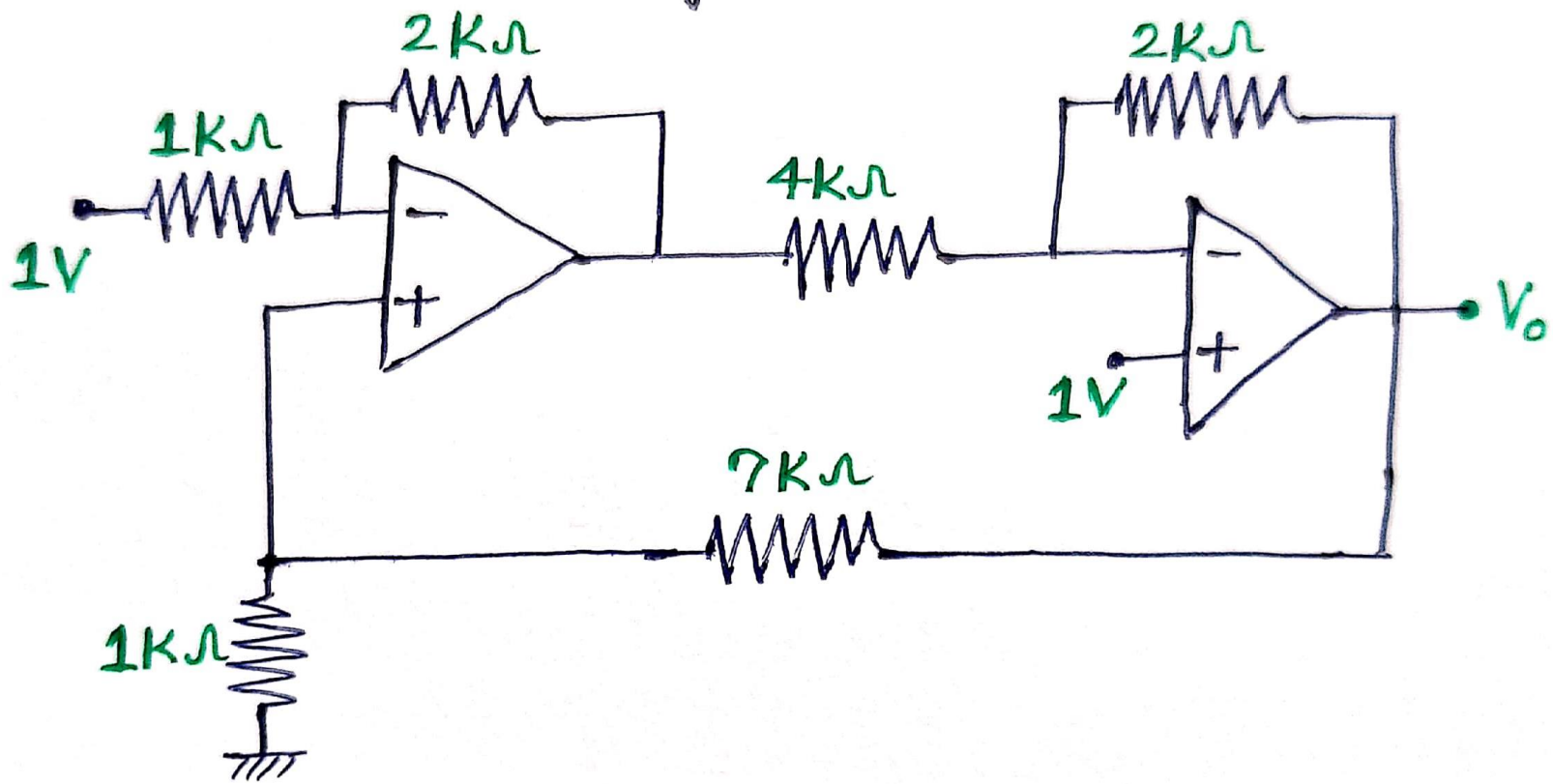

PROB:

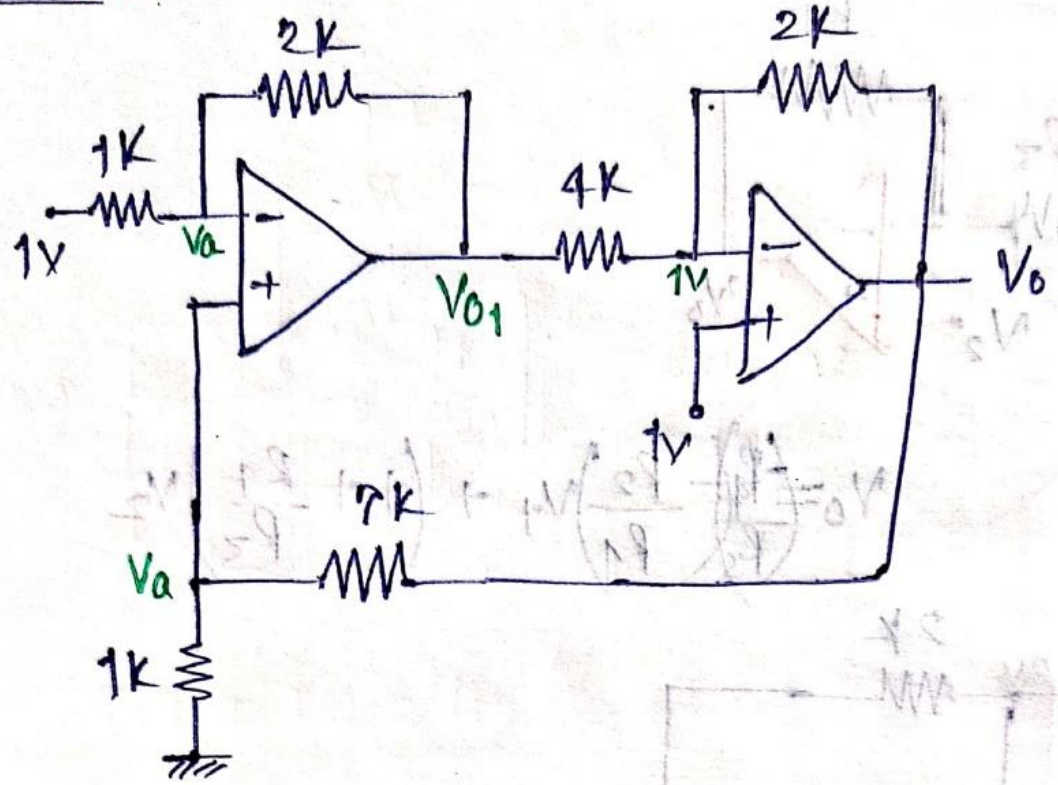

$$V_a = \frac{1K}{1K+7K} V_o = \frac{V_o}{8}$$

$$V_{o1} = \left(-\frac{2K}{1K}\right)(1) + \left(1+\frac{2K}{1K}\right)\left(\frac{V_o}{8}\right)$$

$$V_{o1} = \left(-2 + \frac{3}{8}V_o\right) \quad (1)$$

$$V_o = \left(-\frac{2K}{4K}\right)\left(-2+\frac{3}{8}V_o\right) + \left(1+\frac{2K}{4K}\right)(1)$$

$$V_o = +1 - \frac{3}{16}V_o + \frac{3}{2}$$

$$\frac{19}{16}V_o = \frac{5}{2}$$

$$V_o = \left(\frac{40}{19}\right) V$$

PROB: Find the output voltage (V_o).

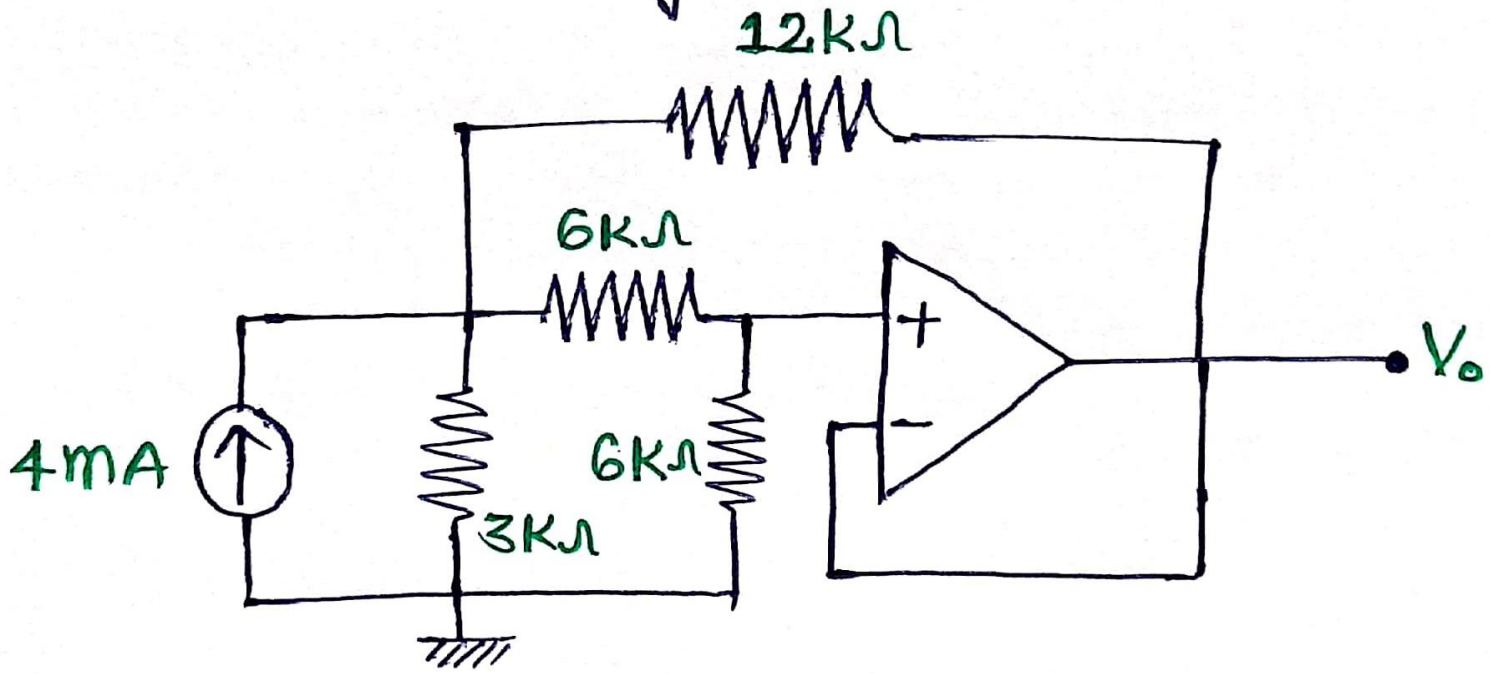

PROB:-

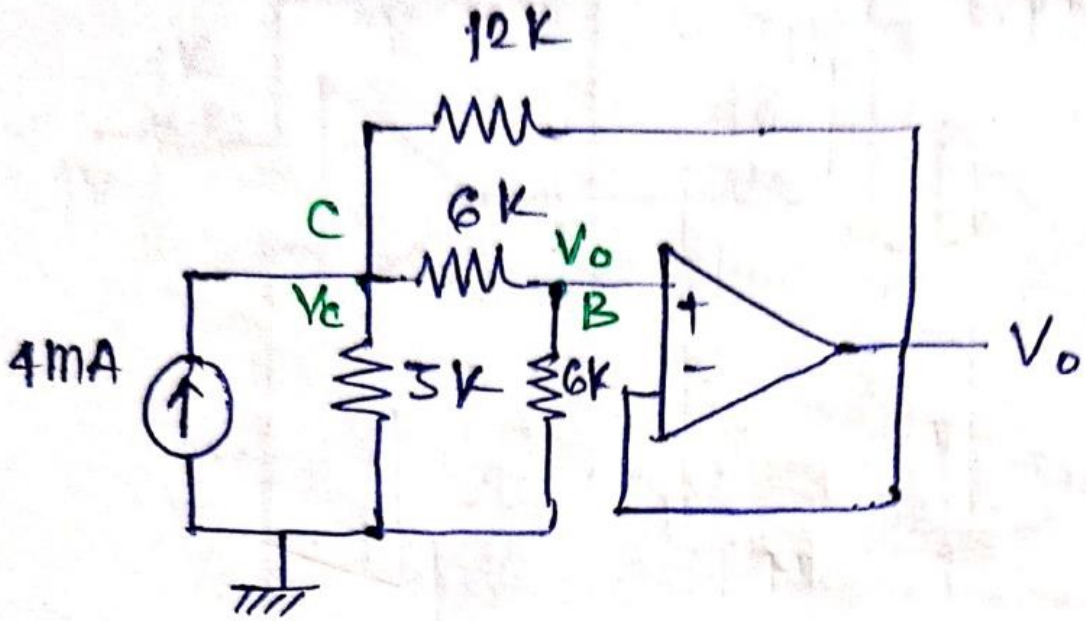

KCL at node B —

$$\frac{V_o - V_c}{6K} + \frac{V_o - 0}{6K} = 0$$

$$V_c = 2V_o \quad \text{— (1)}$$

KCL at node C —

$$\frac{V_c - 0}{3K} + \frac{V_c - V_o}{6K} + \frac{V_c - V_o}{12K} = 4 \times 10^{-3}$$

$$4V_c + 2V_c - 2V_o + V_c - V_o = 48$$

$$7(2V_o) - 3V_o = +48$$

$$V_o = +\frac{48}{11} \text{ V}$$

Presentation Outline

- What is an Op-Amp?
- Characteristics of Ideal and Real Op-Amps
- Common Op-Amp Circuits
- **Applications of Op-Amps**
- References

Applications

- Active filters
  - Signal processing
  - Digital Image processing
- Strain gauges
- Control circuits
  - PID controllers (proportional–integral–derivative controller)
  - PI controllers for temperature, flow, pressure, speed, etc. measurement circuitry
- And much more…

Applications - Filters

<u>Types:</u>

- Low pass filter
- High pass filter
- Band pass filter
- Band stop filter

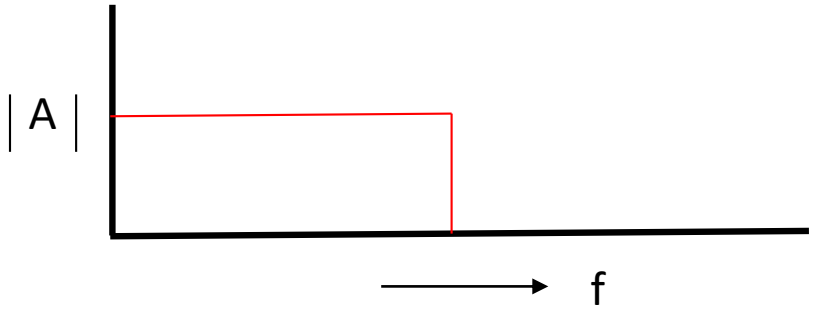

Low-Pass Filter

low pass filter only allows low frequency signals

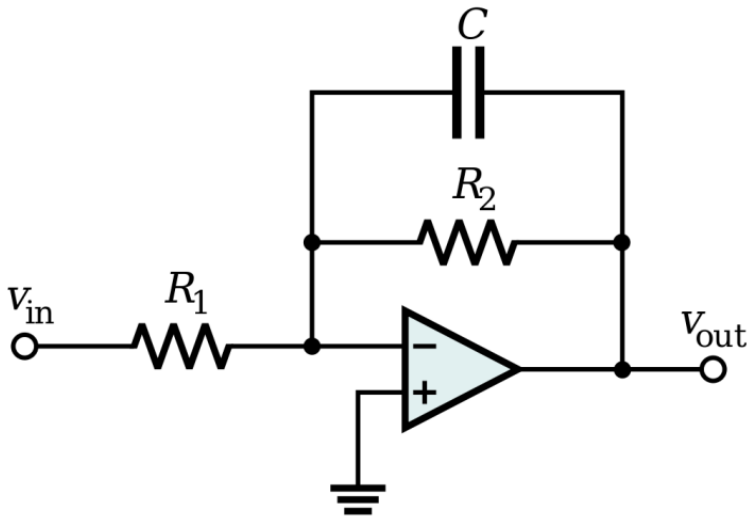

- Attenuates frequencies above the cutoff frequency.
- Cutoff frequency (Hz):
  - $f_c = \frac{1}{2\pi R_2 C}$
- Gain in the passband:
  - $G = -\frac{R_2}{R_1}$

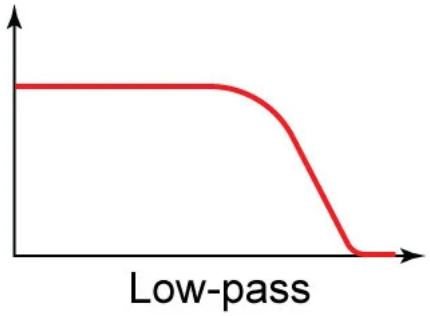

High-Pass Filter

attenuates low frequencies and passes high frequency signals

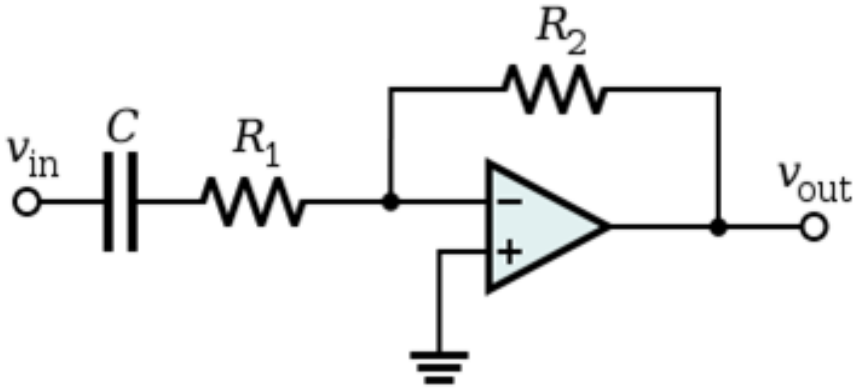

- Attenuates frequencies below the cutoff frequency.
- Cutoff frequency (Hz):
  - $f_c = \frac{1}{2\pi R_1 C}$
- Gain in the passband:
  - $G = -\frac{R_2}{R_1}$

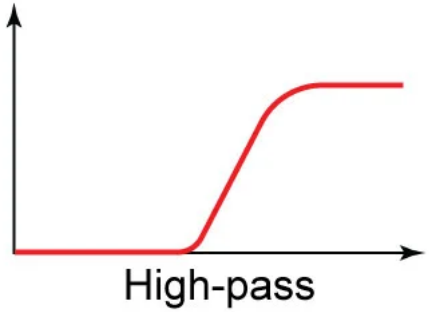

Bandpass Filter

A band pass filter is a frequency selector. It allows one to select or pass only one particular band of frequencies from all other frequencies that may be present in the circuit.

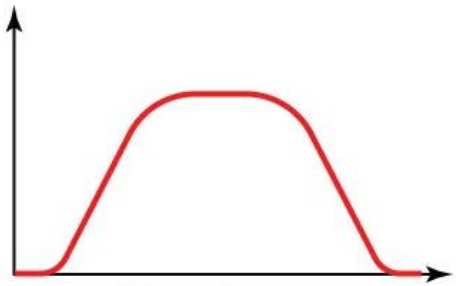

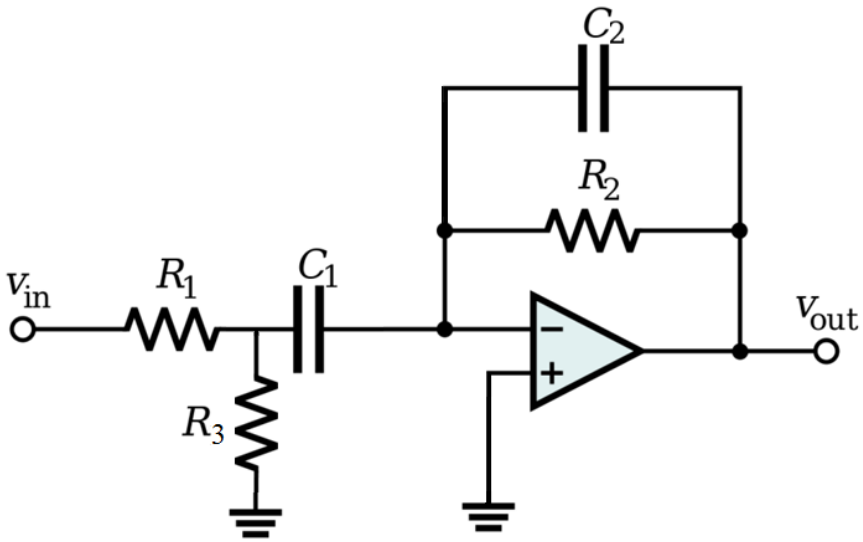

Band Stop (Notch) Filter

A band reject filter or notch filter is one which passes all frequencies except a single band

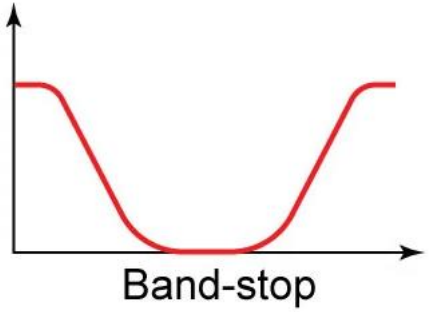

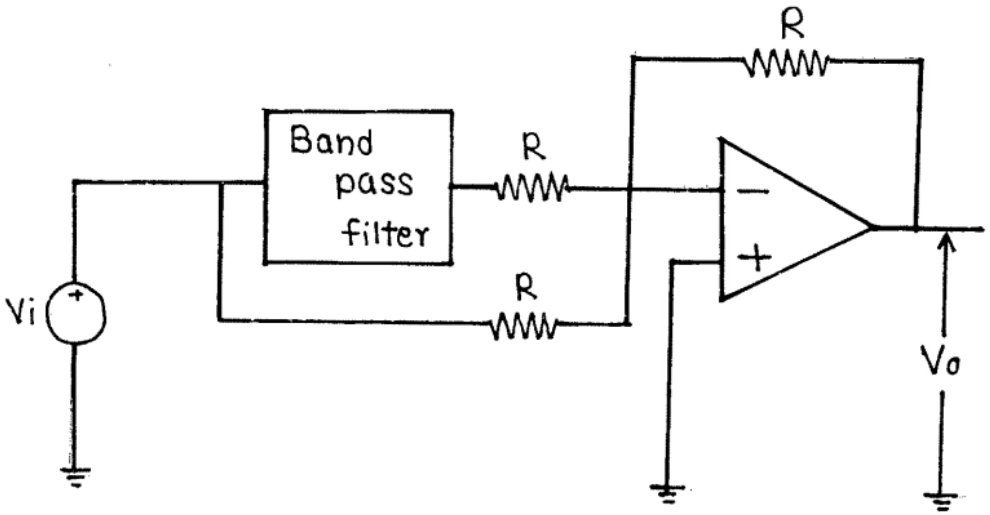

Notch filter using band pass filter and summing amplifier

Strain Gauge

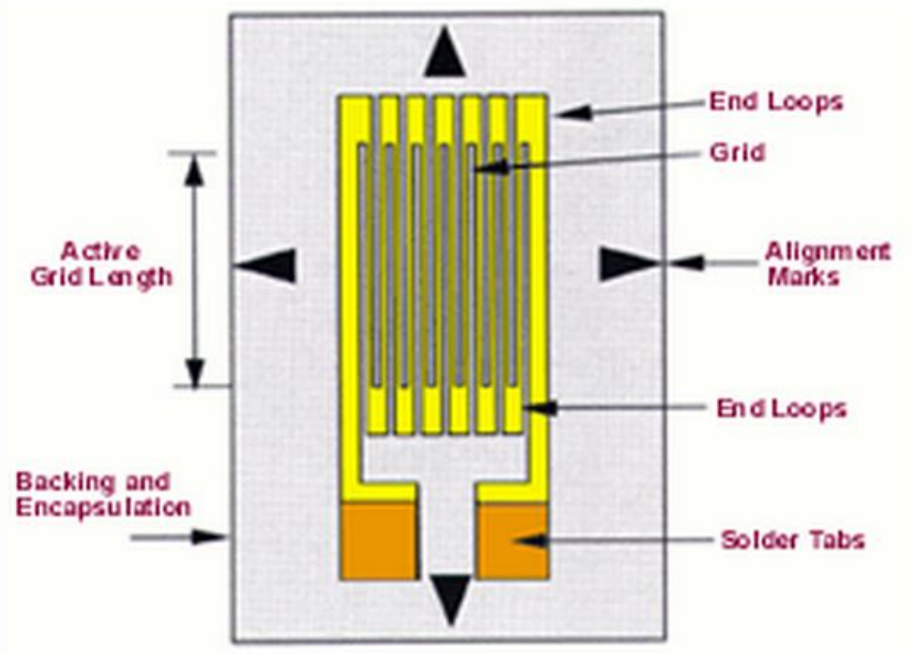

- Strain gauges consist of a pattern of resistive foil mounted on a backing material.
- As the foil is subjected to stress, the resistance of the foil changes in a defined way.
- This results in an output signal directly related to the stress value, typically a few millivolts.
- Op-Amps are utilized to amplify the output signal level to 5~10 V, a suitable level for application to data collection systems.

Strain Gauge Applications

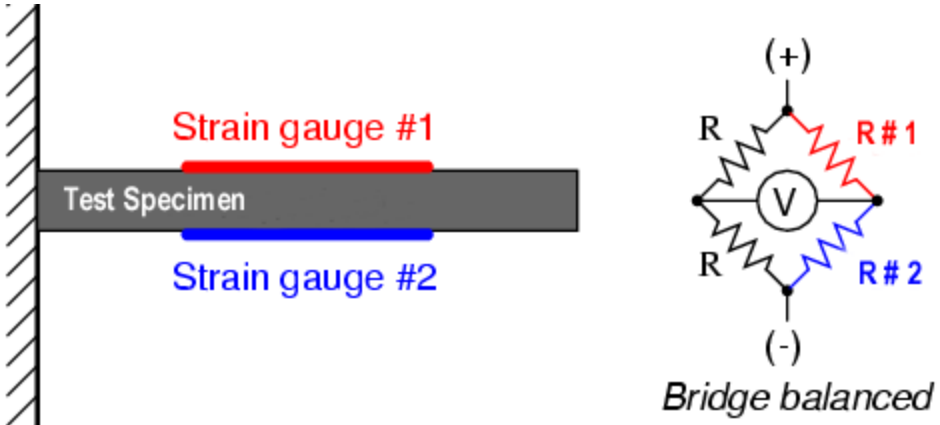

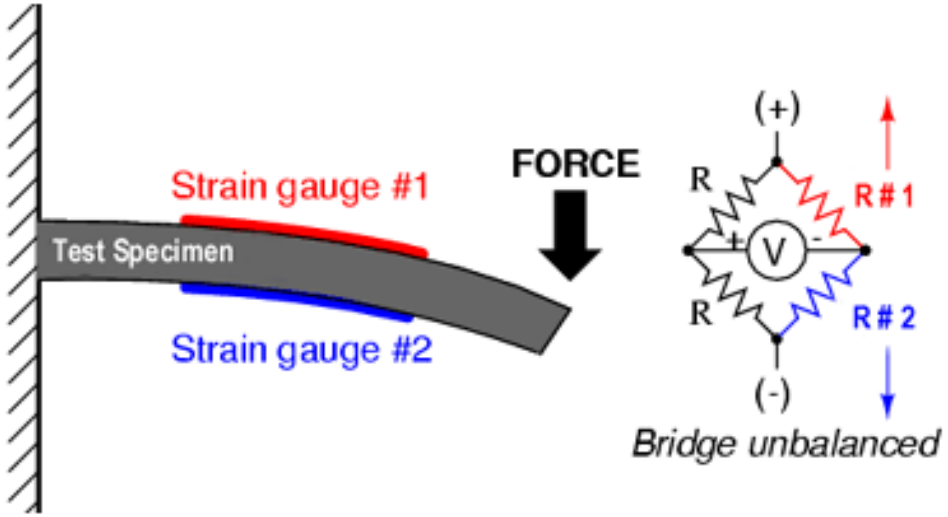

Use a Wheatstone bridge to determine the strain of an element by measuring the change in resistance of a strain gauge

(No strain) Balanced Bridge
R #1 = R #2

(Strain) Unbalanced Bridge
R #1 ≠ R #2

Strain Gauge Applications

Half-Bridge Arrangement

Op amp used to amplify output from strain gauge

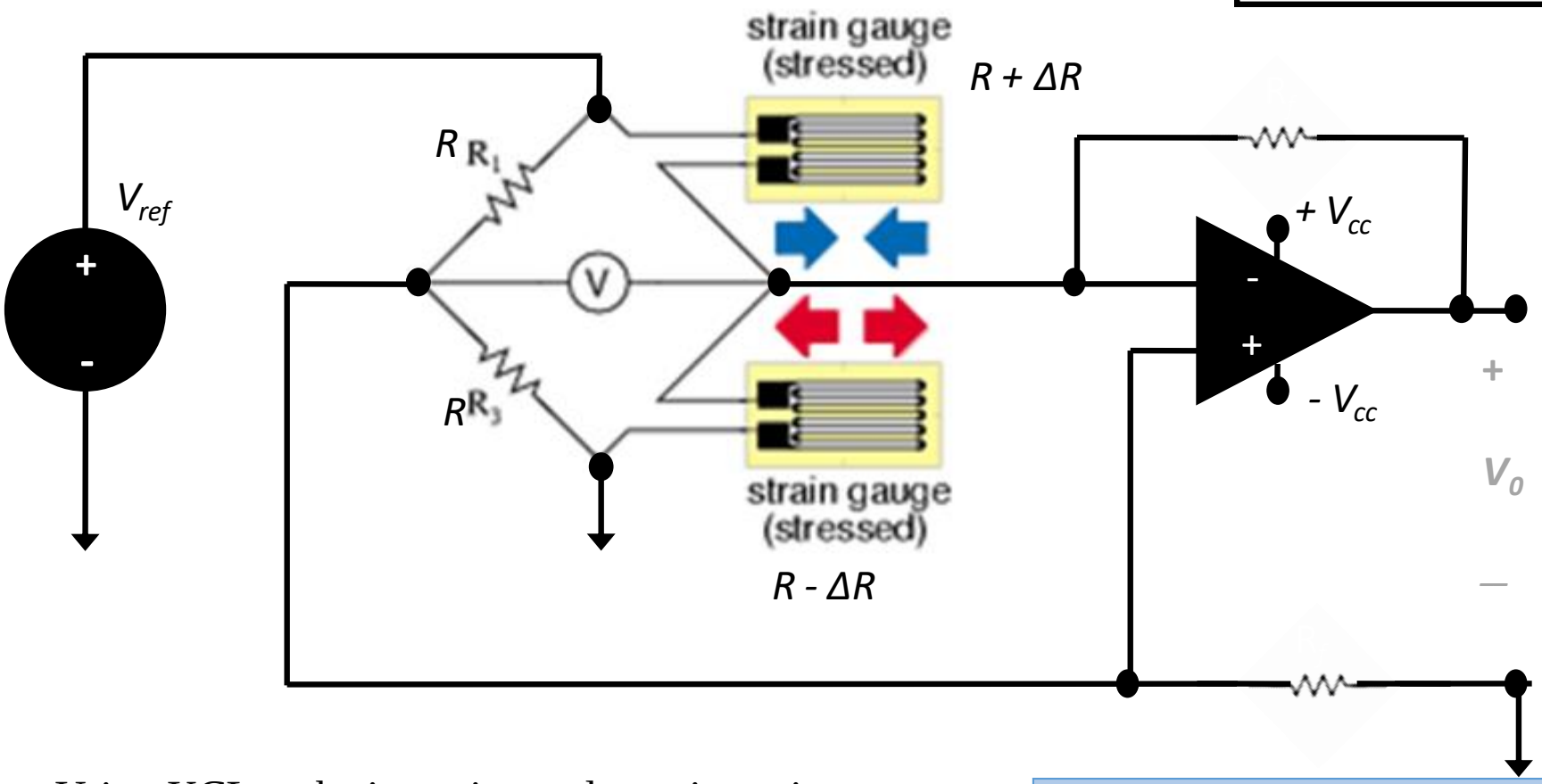

Using KCL at the inverting and non-inverting terminals of the op amp we find that ➔

$$\varepsilon \sim V_o = 2\Delta R(R_f/R^2)$$

PID Controller

- A proportional-integral-derivative (PID) controller is a generic feedback mechanism widely used in industrial control systems.
- It calculates an "error" value as the difference between a measured process variable and a desired setpoint.
- Using this error, it calculates a control input using tuning parameters K_p, K_d, and K_i to drive the error to zero.

$$u(t) = K_p e(t) + K_i \int_0^t e(\tau)d\tau + K_d \frac{d}{dt} e(t)$$

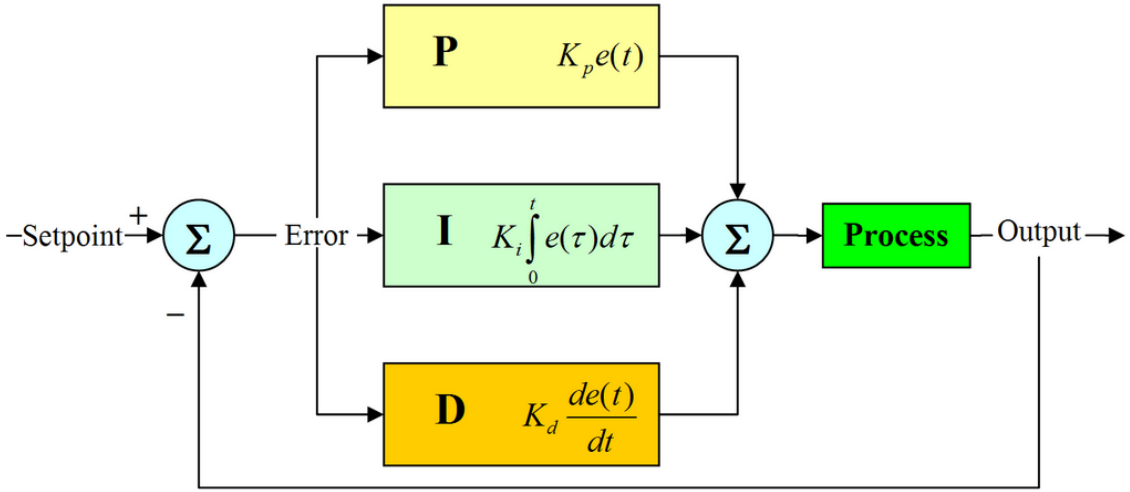

PID Controller – System Block Diagram

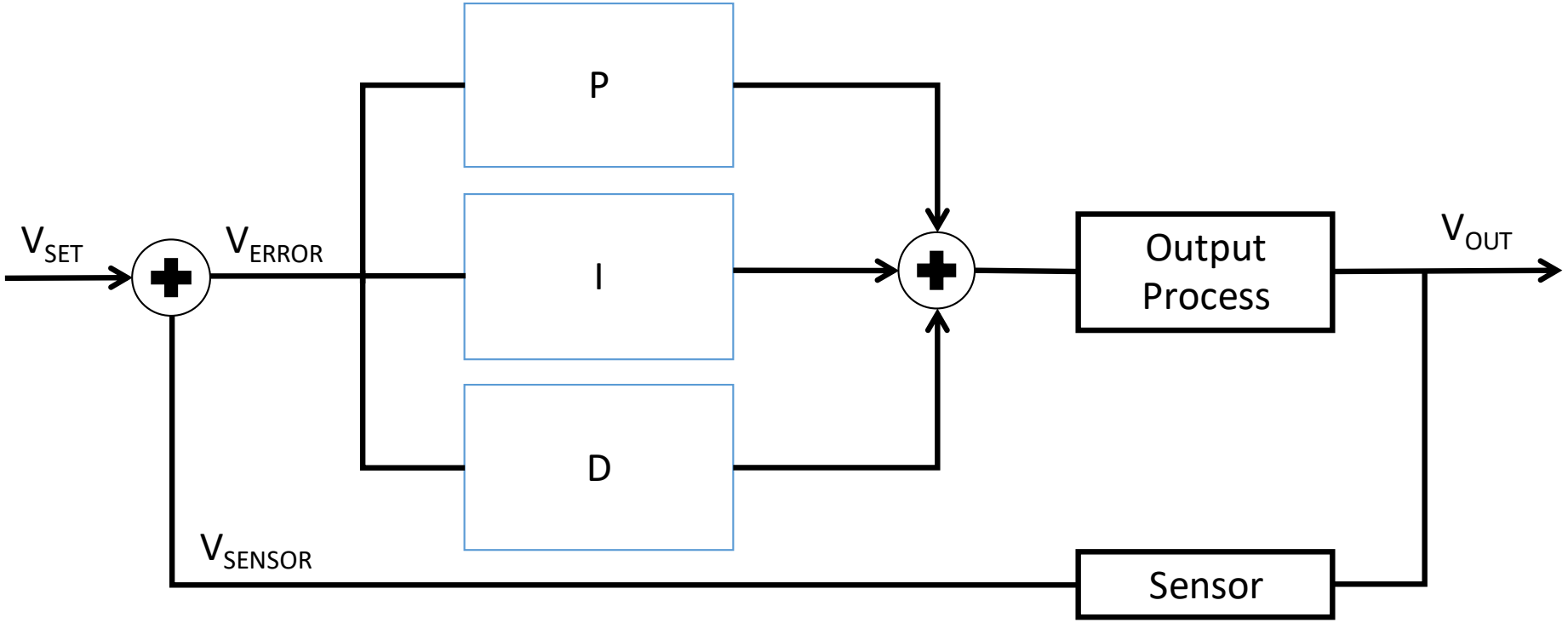

- Goal is to have $V_{SET} = V_{OUT}$
- Remember that $V_{ERROR} = V_{SET} - V_{SENSOR}$
- Output Process uses V_{ERROR} from the PID controller to adjust V_{out} such that it is $\sim V_{SET}$

PID Controller

- So where do op-amps come in?
  - The error is calculated using a Summing Op-Amp.
  - Using this error voltage:
    - The derivative of the error is calculated using a Derivative Op-Amp.
    - The integral of the error is calculated using an Inverting Op-Amp.
  - The tuning parameters K_p, K_d, and K_i can be selected by appropriate selection of resistors and capacitors.

And much more…

- Comparators
- Detectors
  - Threshold detector
  - Zero-level detector
- Oscillators
  - Wien bridge oscillator
  - Relaxation oscillator
- Level shifters

Outline Presentation

- Introduction
- Characteristics of Ideal and Real Op-Amps
- Basic Circuits of Op-Amps
- Applications
- Exercise

Exercise

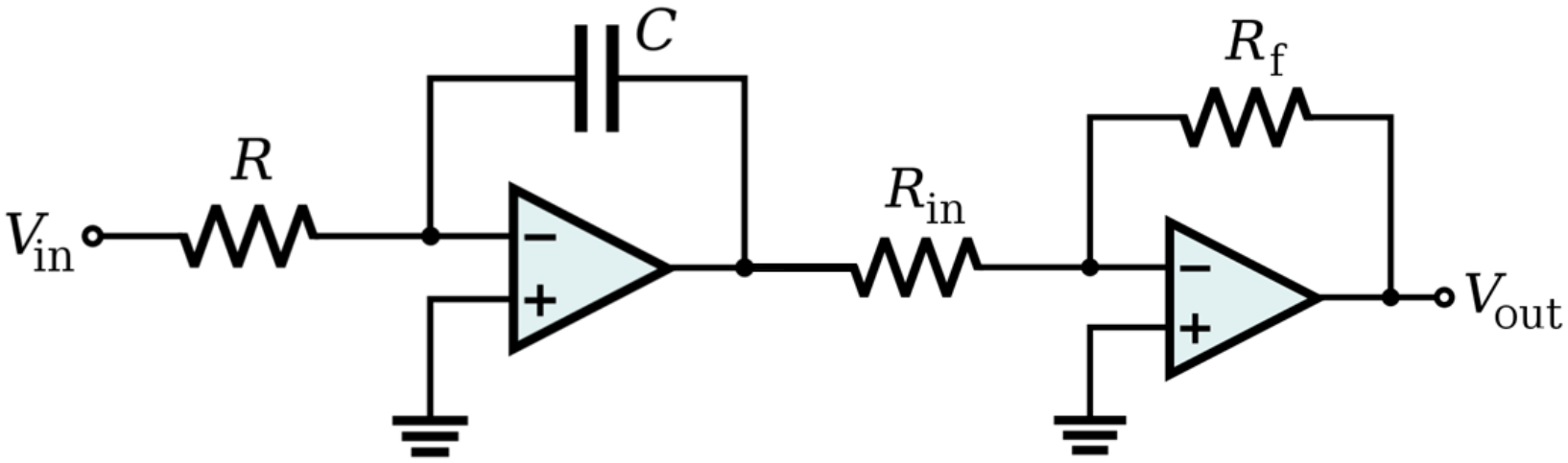

- Consider the circuit above running for 5 seconds. Find $V_{out}(5)$ when:
  - $V_{out}(0) = 0$
  - $V_{in}(\mathrm{t}) = 3\mathrm{t}$
  - $R = 5M\Omega$, $C = 5\mu$, $R_{in} = 10k\Omega$, $R_f = 20k\Omega$

Exercise

1. Design circuits to obtain following outputs:
   - $.v_0 = -v_1 - 10\,v_2 - 5\,v_3$
   - $v_0 = v_1 - 10\,v_2 - 5\,v_3$
   - $v_0 = -10\,v_1 + 10\,v_2$
   - $v_0 = -5\int v_1\,dt$ $\quad$ v_1 *is a pulse input with amplitude* $1\,V$ *and pulse width* $1\,s$.
   - $v_0 = -10\,\frac{dv_1}{dt} + v_1 - 10\,v_2 - 5\,v_3$ $\quad$ v_1 *is cosine function with frequency 100 Hz and peak amplitude of 1 V*

2. How can I get square wave from a sinusoidal input using op amp?

3. How do I get triangular waveform from a square waveform?

ECE 113- Basic Electronics

Lecture week 13: Diodes and their applications

Dr. Ram Krishna Ghosh, Assistant Professor

Office: B601, Research and Development Block

Email: rkghosh@iiitd.ac.in

INDRAPRASTHA INSTITUTE *of*
INFORMATION TECHNOLOGY
DELHI

Rectifier circuits

- Rectifier circuit converts AC supply to DC supply
- Essential for any DC power supply equipment

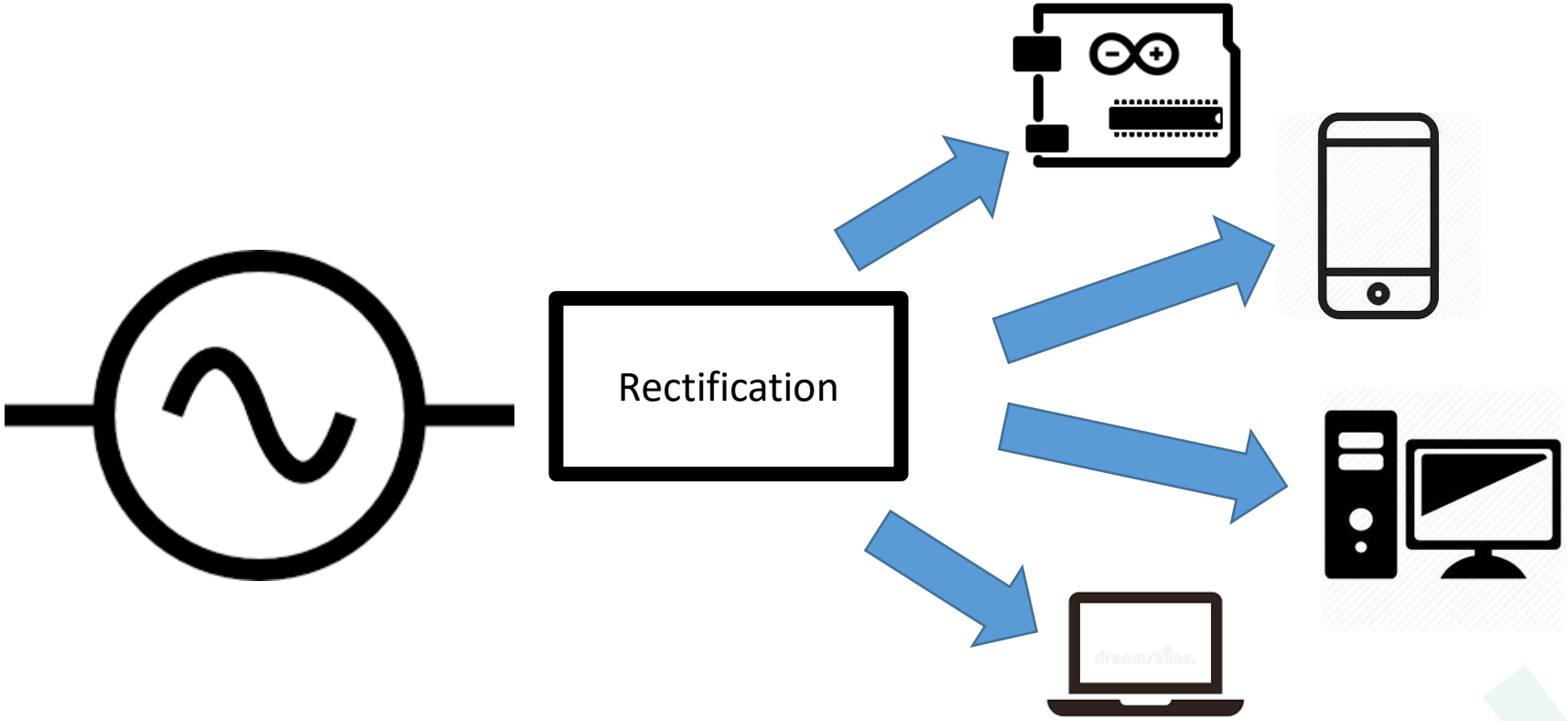

Rectifier Circuit

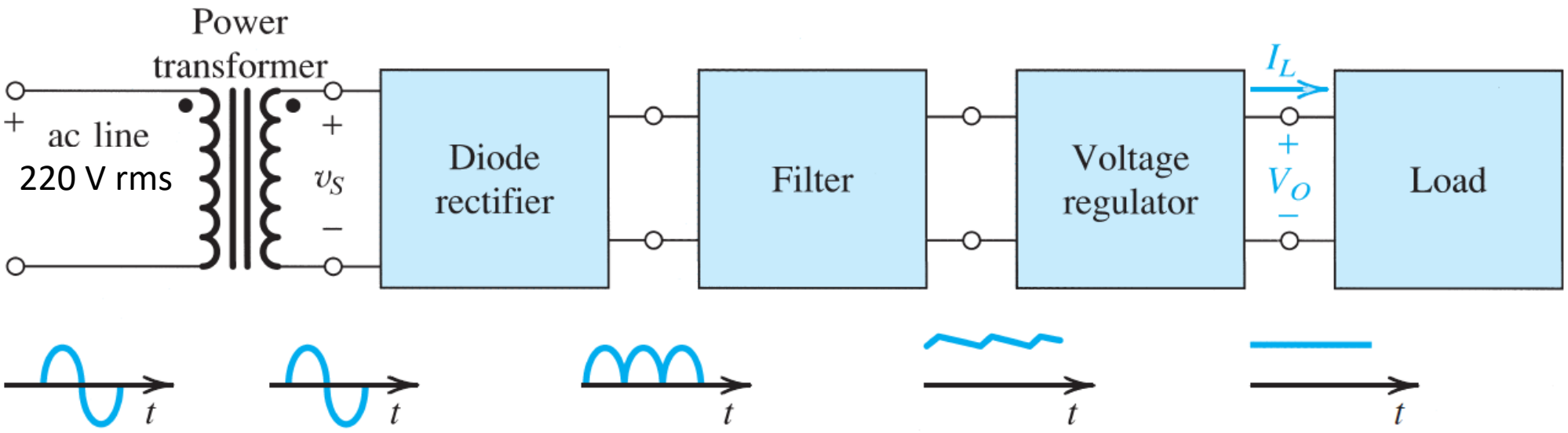

Simple Half Wave Rectifier

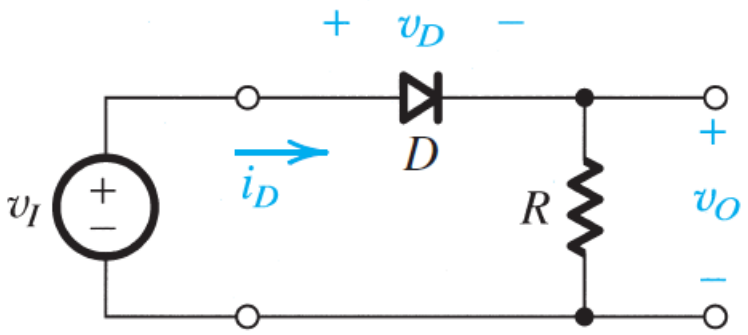

(a)

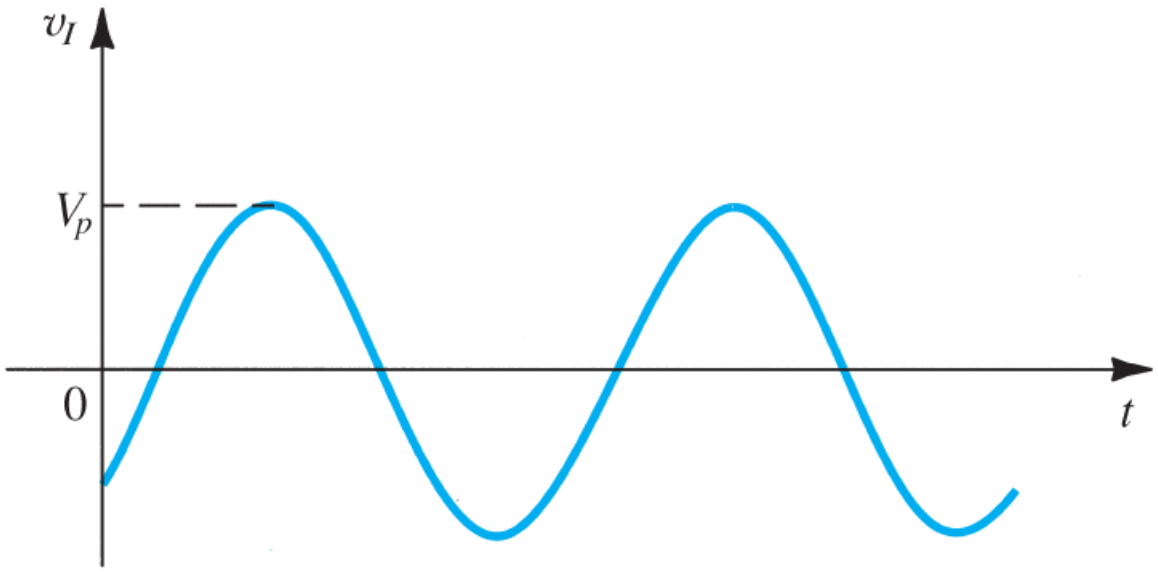

(b)

Simple Half Wave Rectifier

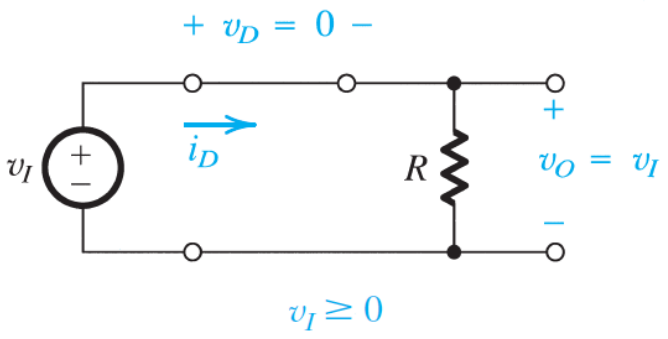

(c)

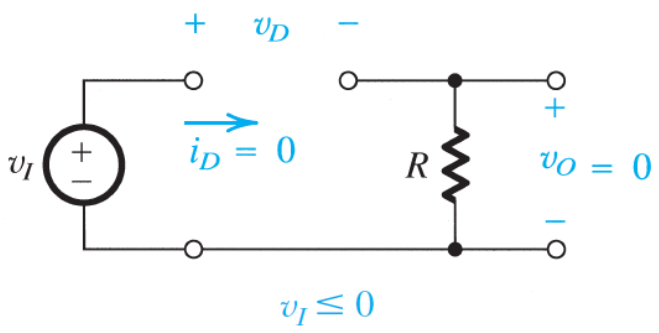

(d)

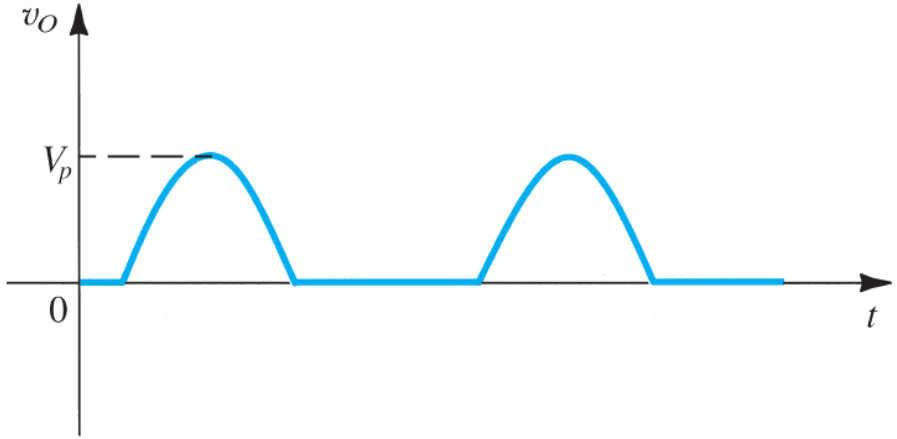

(e)

$$v_O = 0, \qquad v_S < V_D$$

$$v_O = v_S - V_D, \qquad v_S \geq V_t$$

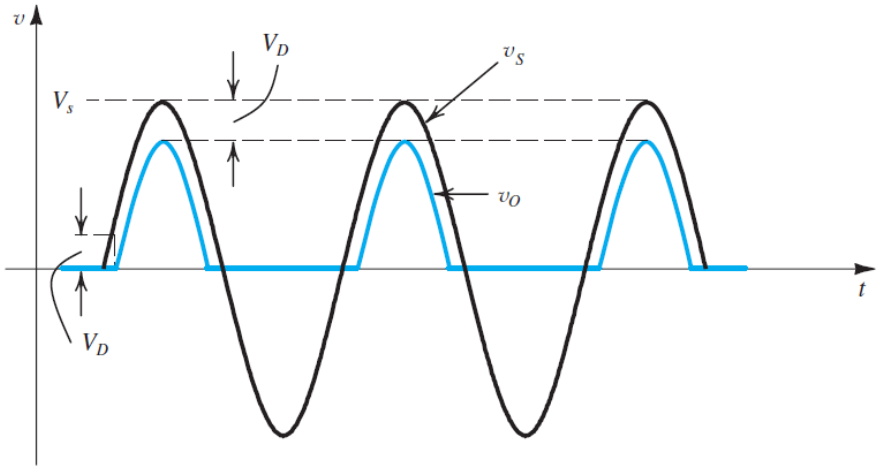

Average output voltage of a half wave rectifier

the average voltage, V_{dc}, of the pulsating DC output of a half wave rectifier

If input voltage is

$$V(t) = V_m \sin(\omega t)$$

Then output is $$V_o(t) = \begin{cases} V_m \sin(\omega t), & 0 \le t \le T/2 \\ 0, & T/2 \le t \le T \end{cases}$$

$$\begin{aligned} V_{dc} &= \frac{1}{T}\int_0^T V_o(t)\mathrm{d}t \\ &= \frac{1}{T}\int_0^{T/2} V_m \sin(\omega t)\mathrm{d}t + \frac{1}{T}\int_{T/2}^{T} 0\ \mathrm{d}t \\ &= \frac{V_m}{T}\int_0^{T/2} \sin(\omega t)\mathrm{d}t \\ &= \frac{V_m}{T}\left[-\frac{\cos(\omega t)}{\omega}\right]_0^{T/2} \\ &= \frac{V_m}{\omega T}\{-\cos(\omega T/2) + \cos(0)\} \\ &= \frac{V_m}{\pi}. \end{aligned}$$

RMS value of the output voltage of a half wave rectifier

RMS value of the output voltage, V_{rms}, of the pulsating DC output

$$
\begin{aligned}
V_{\text{rms}}^2 &= \frac{1}{T}\int_0^T V_{\text{o}}^2(t)\mathrm{d}t \\
&= \frac{V_m^2}{T}\int_0^{T/2} \sin^2(\omega t)\mathrm{d}t + \frac{V_m^2}{T}\int_{T/2}^{T} 0\ \mathrm{d}t \\
&= \frac{V_m^2}{2T}\int_0^{T/2} 2\sin^2(\omega t)\mathrm{d}t \\
&= \frac{V_m^2}{2T}\int_0^{T/2} \{1-\cos(2\omega t)\}\,\mathrm{d}t \\
&= \frac{V_m^2}{2T}\int_0^{T/2} \mathrm{d}t - \frac{V_m^2}{T}\int_0^{T/2} \cos(2\omega t)\mathrm{d}t \\
&= \frac{V_m^2}{2T}\Big[T\Big]_0^{T/2} - \frac{V_m^2}{2T}\left[\frac{\sin(2\omega t)}{2\omega}\right]_0^{T/2} \\
&= \frac{V_m^2}{4} - \frac{V_m^2}{\omega T}\Big\{\sin(2\omega T) - \sin(0)\Big\} \\
&= \frac{V_m^2}{4}.
\end{aligned}
$$

Hence for the half wave rectifier

$$\boxed{V_{\text{rms}} = \frac{V_m}{2}.}$$

Ripple factor of half wave rectifier

Ripple is the unwanted AC component remaining when converting the AC voltage waveform into a DC waveform. Even though we try out best to remove all AC components, there is still some small amount left on the output side which pulsates the DC waveform. This undesirable AC component is called ripple.

Note that to construct a good rectifier, one should keep the ripple factor as low as possible. This is why capacitors and inductors as filters are used to reduce the ripples in the circuit.

To quantify how well the half wave rectifier can convert the AC voltage into DC voltage, we use what is known as the ripple factor (represented by γ).

The ripple factor is the ratio between the RMS value of the AC voltage and the DC voltage of the rectifier.

$$\boxed{\gamma = \frac{\text{RMS value of the AC component}}{\text{value of DC component}} = \frac{V_{\text{r(rms)}}}{V_{\text{dc}}}.}$$

Note that the RMS value of the AC component of the signal is $V_{r(rms)}$ and V_{rms} is the RMS value of the whole voltage signal.

Ripple factor of half wave rectifier

To calculate $V_{r(rms)}$, the RMS value of the AC component present in the output of the half wave rectifier we write the output voltage as

$$V_o(t) = V_{ac} + V_{dc}$$

where V_{ac} is the AC component remaining when converting the AC voltage waveform into a DC waveform.

The RMS value of the AC component present in the output of the half wave rectifier is given by

$$V_{r(rms)} = \left[\frac{1}{T}\int_0^T V_{ac}^2\,dt\right]^{1/2}$$

$$\begin{aligned}
V_{r(rms)}^2 &= \frac{1}{T}\int_0^T (V_o - V_{dc})^2\,dt \\
&= \frac{1}{T}\int_0^T (V_o^2 - 2V_oV_{dc} + V_{dc}^2)\,dt \\
&= \frac{1}{T}\int_0^T V_o^2\,dt - \frac{2V_{dc}}{T}\int_0^T V_o\,dt + V_{dc}^2 \\
&= V_{rms}^2 - 2V_{dc}^2 + V_{dc}^2 \\
&= V_{rms}^2 - V_{dc}^2.
\end{aligned}$$

Hence the formula to calculate the ripple factor can be written as

$$\gamma = \frac{V_{r(rms)}}{V_{dc}} = \sqrt{\left(\frac{V_{rms}}{V_{dc}}\right)^2 - 1}$$

Using the values of V_{dc} and V_{rms}

$$\gamma = \sqrt{\left(\frac{V_m}{2} \times \frac{\pi}{V_m}\right)^2 - 1} = \sqrt{\left(\frac{\pi}{2}\right)^2 - 1} \approx 1.21.$$

Efficiency of half wave rectifier

The ratio of the DC power available at the load to the applied input AC power is known as the efficiency, η. Mathematically it can be given as:

$$\boxed{\eta = \frac{\text{DC power output}}{\text{AC power input}} = \frac{P_{\text{dc}}}{P_{\text{ac}}}.}$$

Let r_f and R_L be the forward resistance and load resistance of the diode. During the conduction period the instantaneous value of the current is given by the equation:

$$I(t) = \frac{V(t)}{R_L + r_f} = \frac{V_m}{R_L + r_f}\sin(\omega t) = I_m \sin(\omega t)$$

with $I_m = V_m/(r_f + R_L)$ being the maximum current.

Now, the AC power input to the load is given as,

$$P_{\text{ac}} = I_{\text{rms}}^2(R_L + r_f) = \frac{V_{\text{rms}}^2}{R_L + r_f}.$$

Since the output is obtained across R_L, the DC power output is given by $P_{\text{dc}} = I_{\text{dc}}^2 R_L = \frac{V_{\text{dc}}^2}{R_L}$

Efficiency of half wave rectifier

The half wave rectifier efficiency is then

$$
\begin{aligned}
\eta &= \frac{P_{\text{dc}}}{P_{\text{ac}}} \\
&= \frac{V_{\text{dc}}^2}{R_L} \times \frac{R_L + r_f}{V_{\text{rms}}^2} \\
&= \frac{V_{\text{dc}}^2}{V_{\text{rms}}^2} \times \frac{R_L + r_f}{R_L} \\
&= \left(\frac{V_{\text{dc}}}{V_{\text{rms}}}\right)^2 \times \left(1 + \frac{r_f}{R_L}\right) \\
&= \left(\frac{V_m/\pi}{V_m/2}\right)^2 \times \left(1 + \frac{r_f}{R_L}\right) \\
&\approx 0.4053 \left(1 + \frac{r_f}{R_L}\right)
\end{aligned}
$$

In reality r_f is much smaller then R_L. If we neglect r_f compare to R_L then the efficiency of the rectifier is maximum. Therefore,

$$\boxed{\eta_{\max} \approx 0.4053 = 40.53\%.}$$

This indicates that the half wave rectifier can convert maximum 40.53% of AC power into DC power, and the remaining power of 59.47% is lost in the rectifier circuit. In fact, 50% power in the negative half cycle is not converted and the remaining 9.47% is lost in the circuit.

Applications of half wave rectifier

Half wave rectifier is not so good as compared to Full-wave or Bridge rectifier, but sometimes we require this rectifier depending on the requirements. Some of the applications of half-wave rectifier are

- It is used for the detection of amplitude modulated radio signals.
- For the welding purpose, it supplies polarized voltage.
- It is used in many signal demodulation processes.

Advantages of half wave rectifier

The main advantage of half-wave rectifiers is in their simplicity. As they do not require as many components, they are simpler and cheaper to setup and construct. As such, the main advantages of half-wave rectifiers are:

- Simple (lower number of components)
- Cheaper up front cost (as their is less equipment. Although there is a higher cost over time due to increased power losses)

Disadvantages of half wave rectifier

The disadvantages of half-wave rectifiers are:

- They only allow a half-cycle through per sinewave, and the other half-cycle is wasted. This leads to power loss.
- They produces a low output voltage.
- The output current we obtain is not purely DC, and it still contains a lot of ripple (i.e. it has a high ripple factor)

Example problem

For the half-wave rectifier circuit in Fig. 4.21(a), show the following: (a) For the half-cycles during which the diode conducts, conduction begins at an angle $\theta = \sin^{-1}(V_D/V_s)$ and terminates at $(\pi - \theta)$, for a total conduction angle of $(\pi - 2\theta)$. (b) The average value (dc component) of v_O is $V_O \simeq (1/\pi)V_s - V_D/2$. (c) The peak diode current is $(V_s - V_D)/R$).
Find numerical values for these quantities for the case of 12-V (rms) sinusoidal input, $V_D \simeq 0.7$ V, and $R = 100\ \Omega$. Also, give the value for PIV.

Full wave rectifier with center tap

A full wave rectifier converts both halves of each cycle of an alternating wave (AC signal) into pulsating DC signal. Figure shows the circuit diagram a center tapped full wave rectifier.

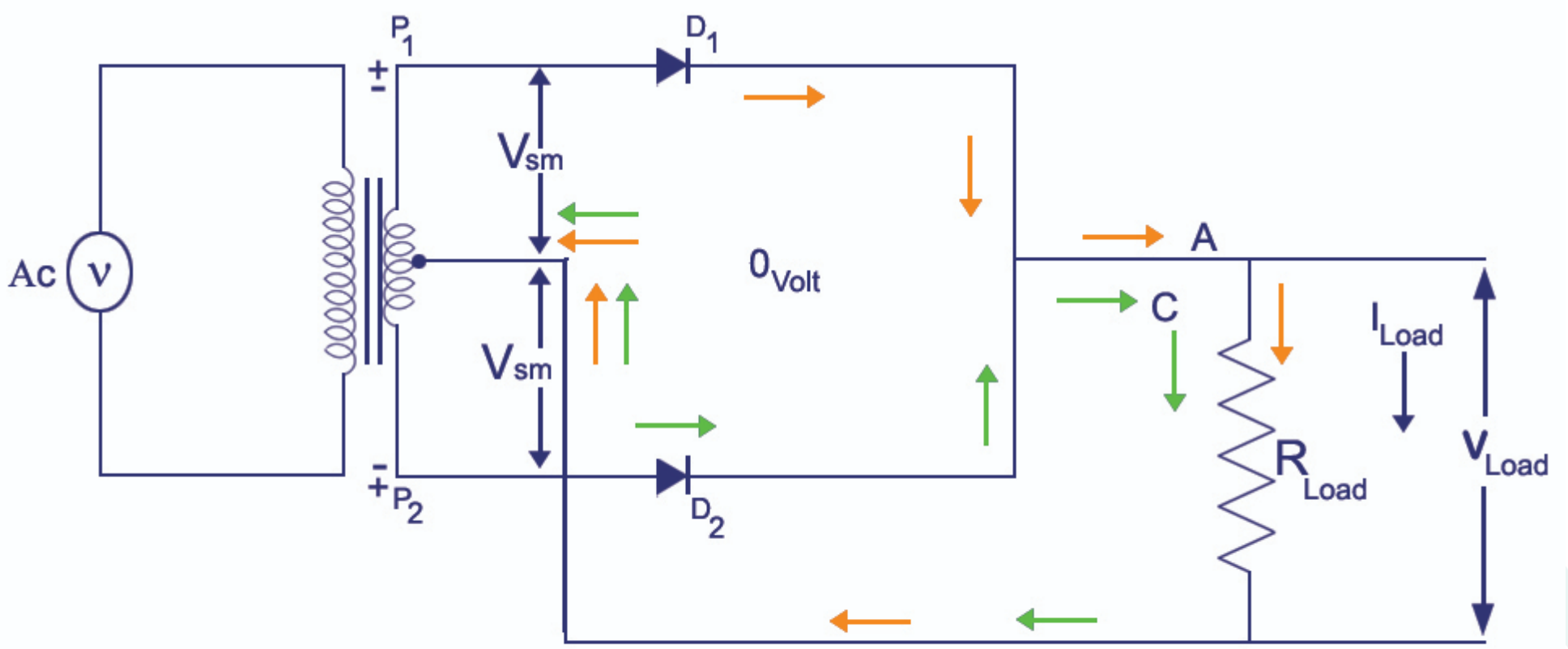

CENTRE - TAP FULL- WAVE RECTIFIER CIRCUIT

Full wave rectifier with center tap

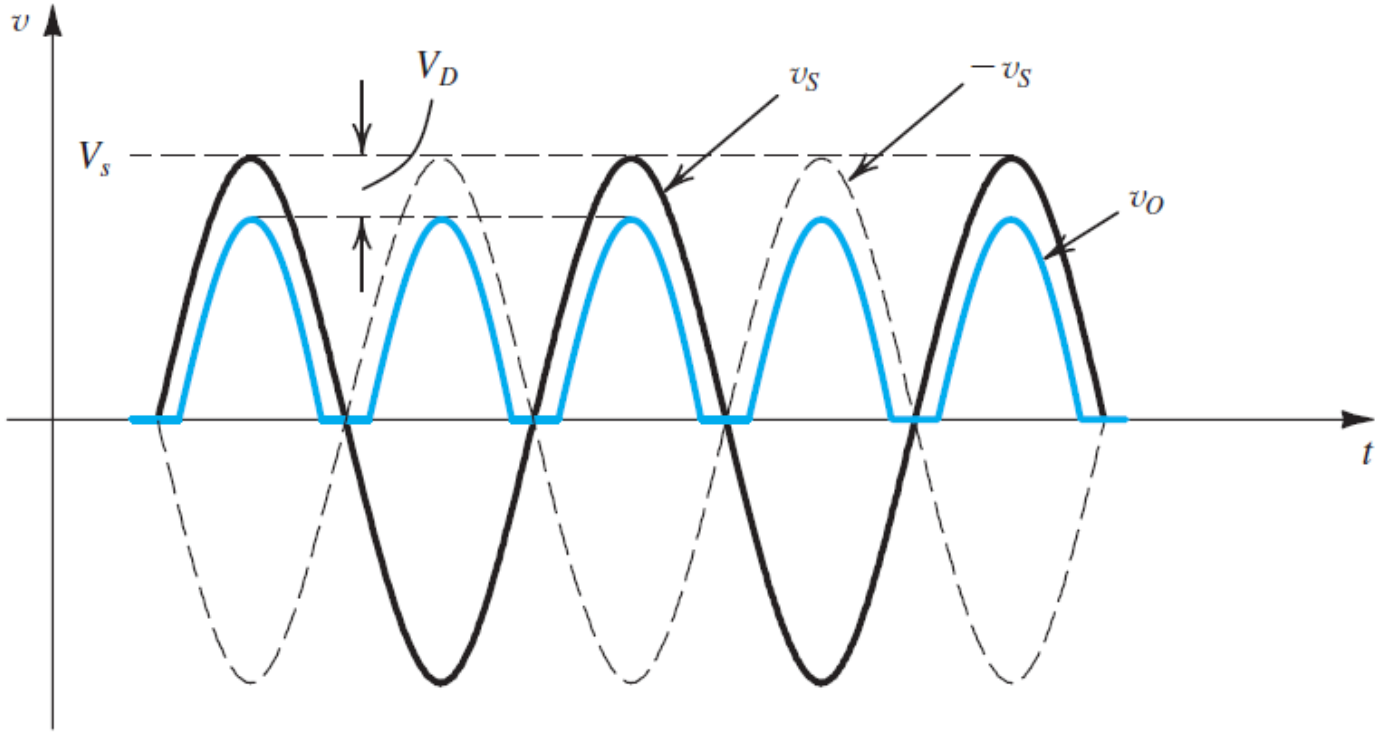

The waveform of the output voltage of a full wave rectifier can be written as (for an ideal diode)

$$V_o(t) = \begin{cases} V_m \sin(\omega t), & 0 \le t \le T/2 \\ V_m \sin(\omega t - \pi), & T/2 \le t \le T \end{cases}$$

Average output voltage, rms voltage, ripple factor and efficiency of a full wave rectifier

Average/DC output voltage

$$
\begin{aligned}
V_{\mathrm{dc}} &= \frac{1}{T}\int_0^T V_{\mathrm{o}}(t)\mathrm{d}t \\
&= \frac{1}{T/2}\int_0^{T/2} V_m \sin(\omega t)\mathrm{d}t \\
&= \frac{2V_m}{T}\int_0^{T/2} \sin(\omega t)\mathrm{d}t \\
&= \frac{2V_m}{\pi}.
\end{aligned}
$$

RMS value of the output voltage

$$
\begin{aligned}
V_{\mathrm{rms}} &= \left[\frac{1}{T}\int_0^T V_{\mathrm{o}}^2(t)\mathrm{d}t\right]^{1/2} \\
&= \left[\frac{V_m^2}{T/2}\int_0^{T/2} \sin^2(\omega t)\mathrm{d}t\right]^{1/2} \\
&= \left[\frac{V_m^2}{T}\int_0^{T/2} 2\sin^2(\omega t)\mathrm{d}t\right]^{1/2} \\
&= \frac{V_m}{\sqrt{2}}.
\end{aligned}
$$

Ripple factor of full wave rectifier

$$
\begin{aligned}
\gamma &= \sqrt{\left(\frac{V_{\mathrm{rms}}}{V_{\mathrm{dc}}}\right)^2 - 1} \\
&= \sqrt{\left(\frac{\pi}{2\sqrt{2}}\right)^2 - 1} \\
&\approx 0.48
\end{aligned}
$$

Efficiency of full wave rectifier

$$
\begin{aligned}
\eta &= \frac{P_{\mathrm{dc}}}{P_{\mathrm{dc}}} \\
&= \left(\frac{V_{\mathrm{dc}}}{V_{\mathrm{rms}}}\right)^2 \times \left(1 + \frac{r_f}{R_L}\right) \\
&\approx 0.8106\left(1 + \frac{r_f}{R_L}\right)
\end{aligned}
$$

$$\boxed{\eta_{\max} \approx 0.8106 = 81.06\%.}$$

The Bridge Rectifier

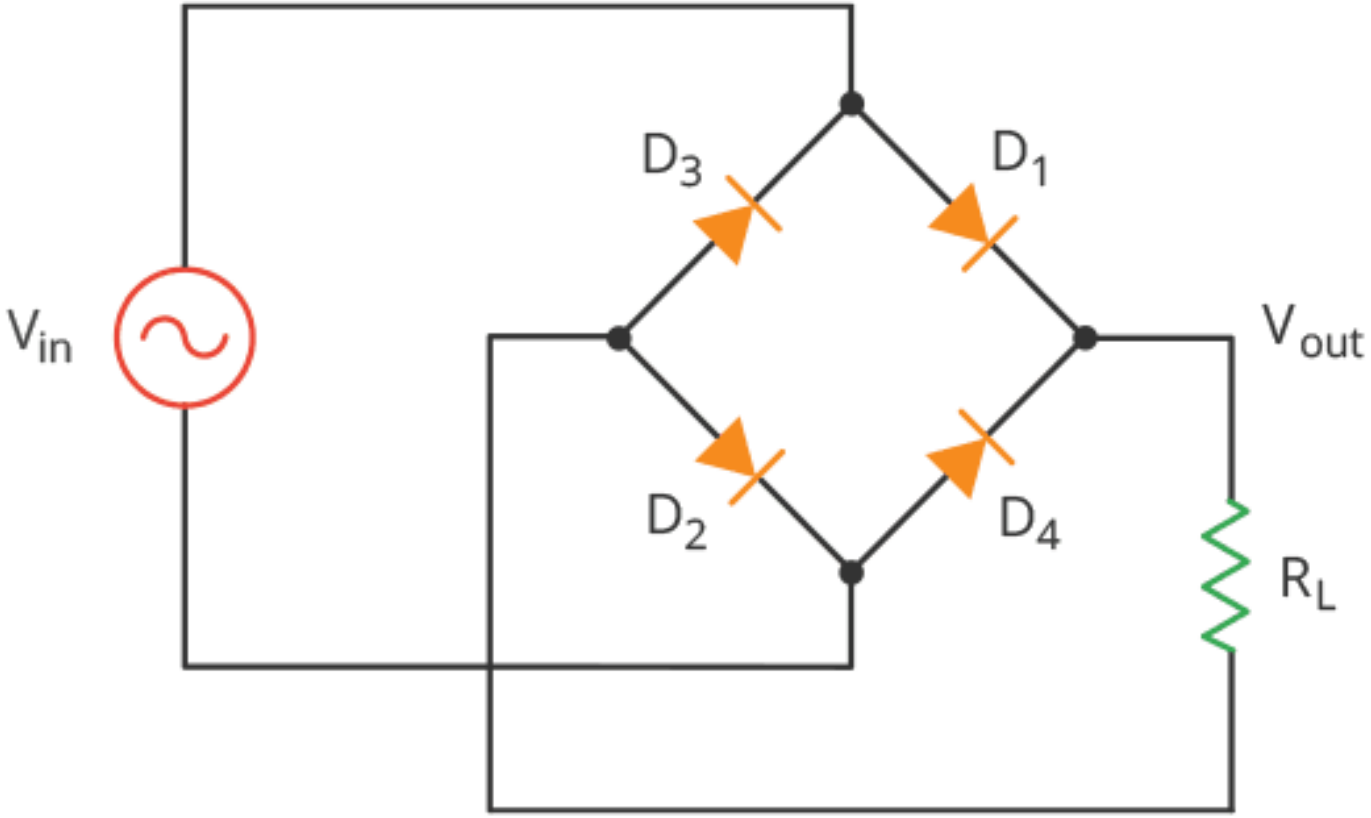

The Bridge Rectifier

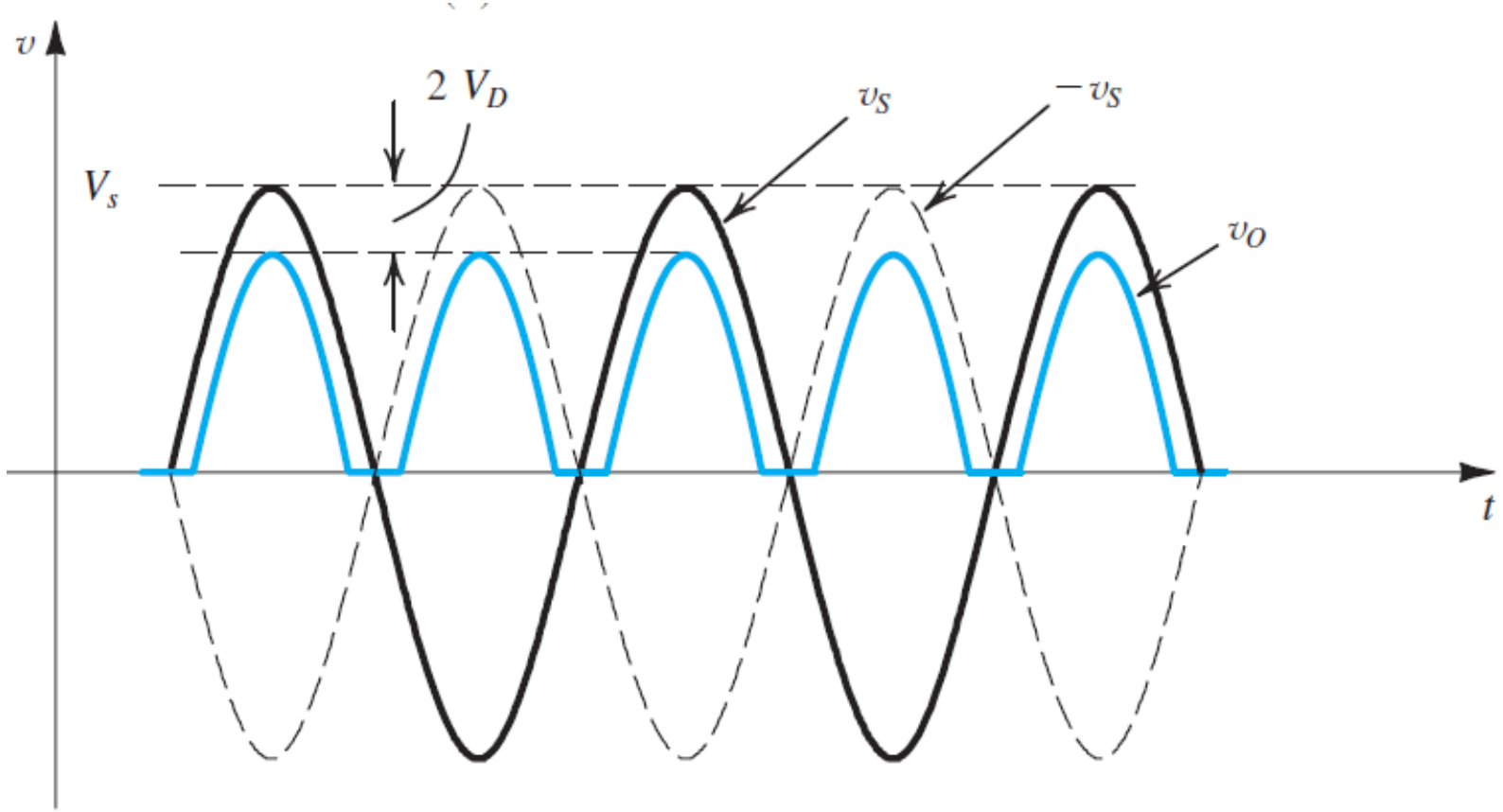

Applications of full wave rectifier

Full wave rectifier is of two types; center tapped and bridge rectifier. Both these rectifiers are used for following purposes depends upon the requirement. Following of full wave rectifier applications are:

- It can be used to detect the amplitude of modulated radio signal.
- It can be used to supply polarized voltage in welding.
- The Bridge Rectifier circuits are widely used in power supply for various appliances, as they are capable of converting the High AC voltage into Low DC voltage.

Advantages of full wave rectifier

- Full wave rectifiers have higher rectifying efficiency than half-wave rectifiers. This means that they convert AC to DC more efficiently.
- They have low power loss because no voltage signal is wasted in the rectification process.
- The output voltage of center tapped full wave rectifier has lower ripples than a half wave rectifiers.

Disadvantages of full wave rectifier

- The center tapped rectifier is more expensive than half-wave rectifier and tends to occupy a lot of space.

Rectifier with a filter capacitor

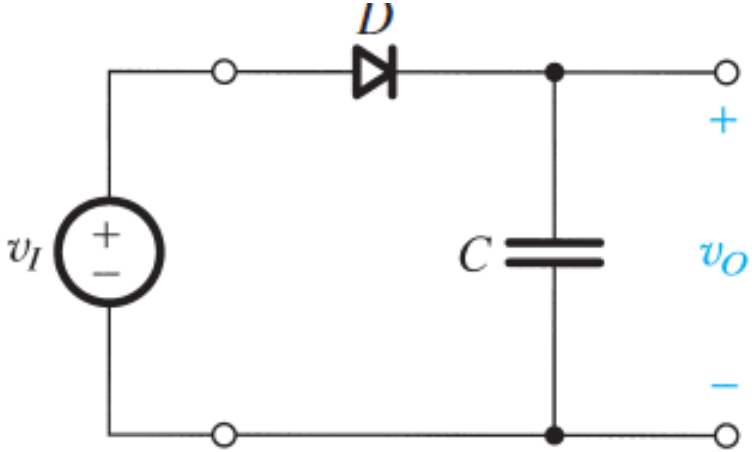

***Assume ideal diode**

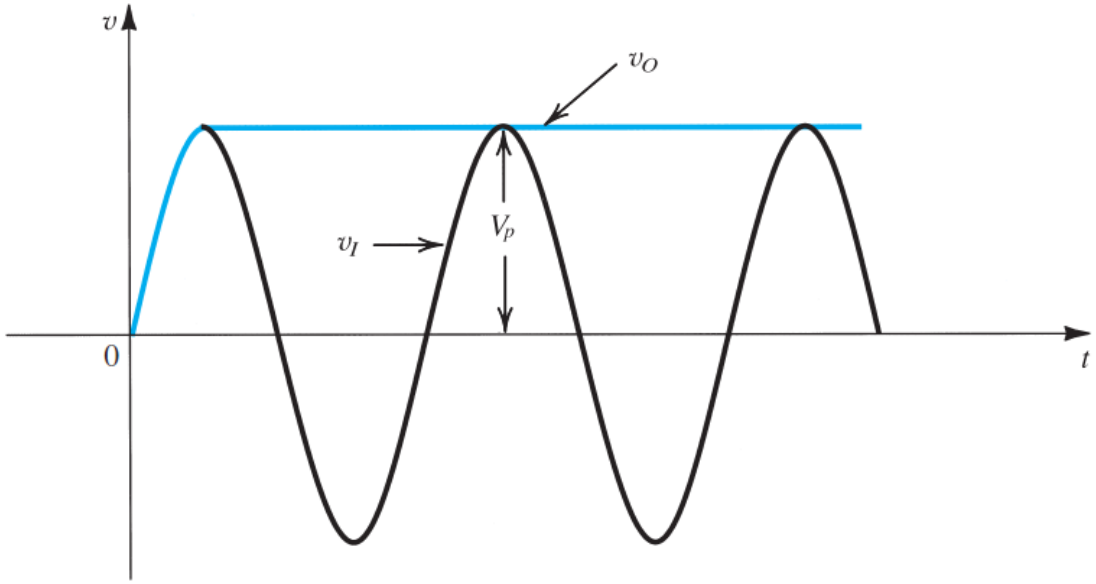

Rectifier with a filter capacitor

*Assume ideal diode

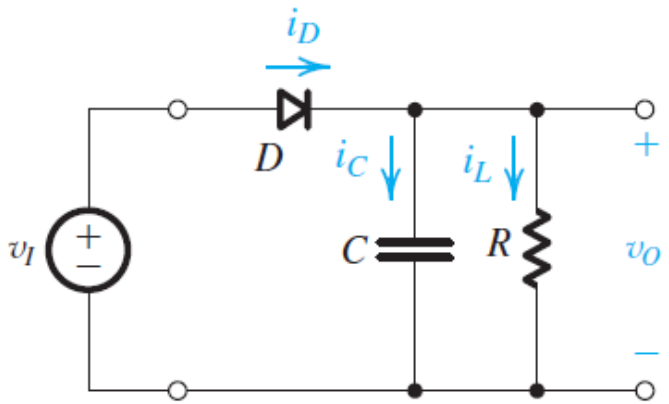

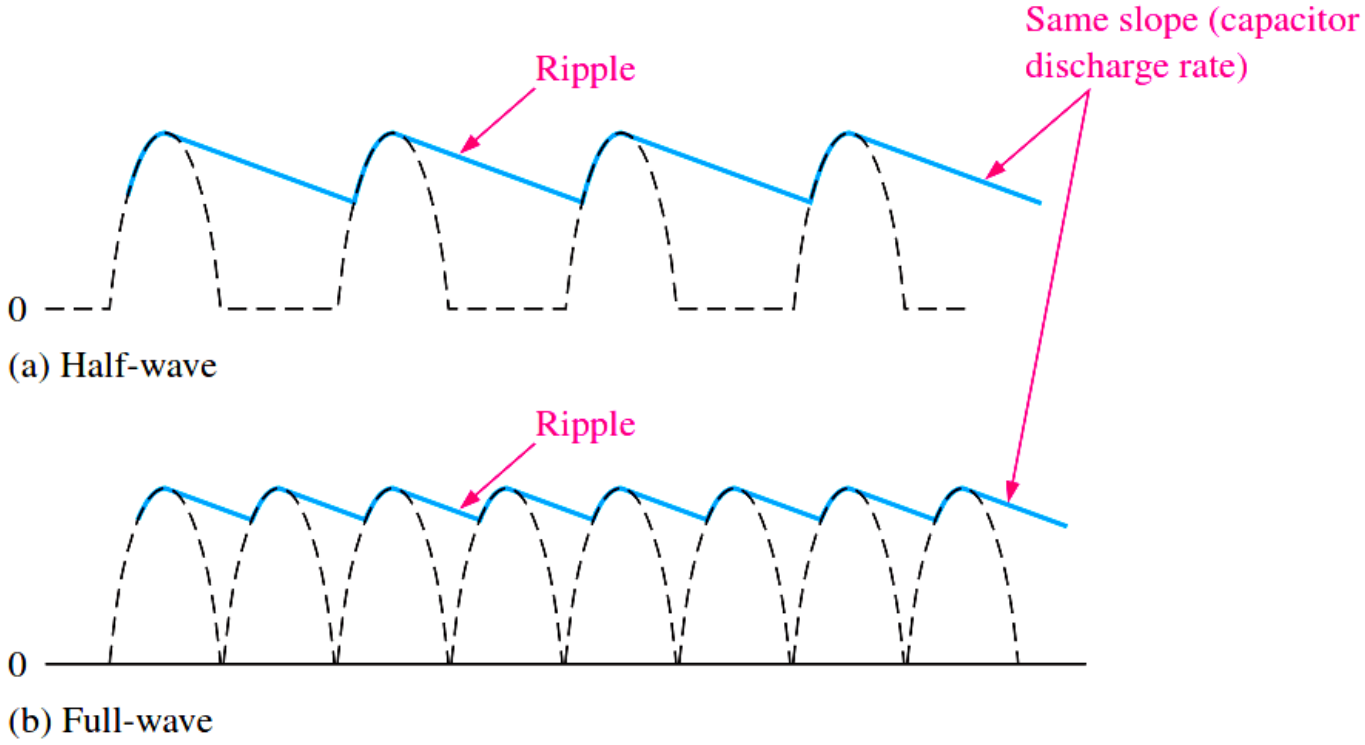

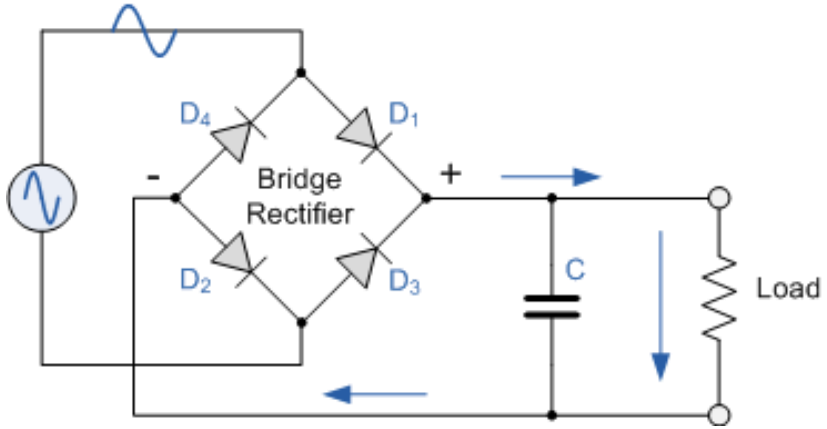

- Time constant of capacitor discharge is CR, so CR is chosen large compare to the period of input a.c.
- Since the reactance of the capacitor is 1/ωC is small than load R, we may think that the a.c. components in rectifier output prefers to bypass through capacitor, on other hand d.c. cannot pass through C and remains in the load resistor

Example

Consider a peak rectifier fed by a 60-Hz sinusoid having a peak value $V_p = 100$ V. Let the load resistance $R = 10$ kΩ. Find the value of the capacitance C that will result in a peak-to-peak ripple of 2 V. Also, calculate the fraction of the cycle during which the diode is conducting and the average and peak values of the diode current.

Limiter/Clipper

- Clipper circuits, also called limiter circuits, are used to eliminate portion of a signal that are above or below a specified level – clip value.
- The purpose of the diode is that when it is turn on, it provides the clip value
- As these circuits are used only for clipping input waveform as per the requirement and for transmitting the waveform, they do not contain any energy storing element like a capacitor.
- Half wave rectifiers is an example of a diode clipper

Limiter/Clipper

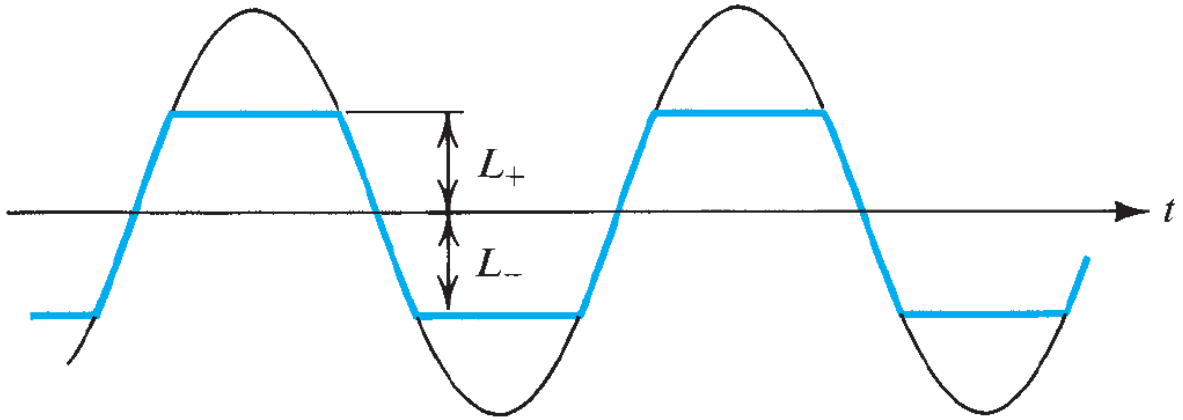

Limiter/Clipper

Positive Diode Clipping Circuit

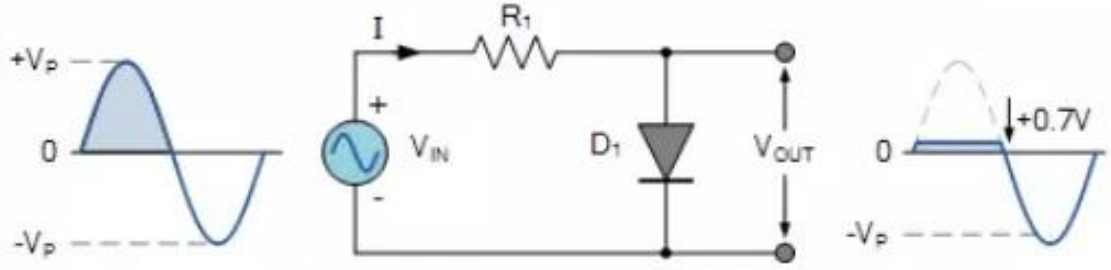

Positive Biased Diode Clipper

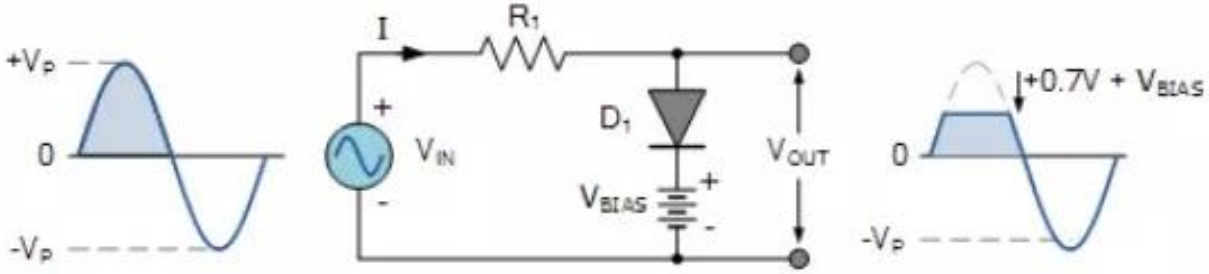

Negative Clipping Circuit

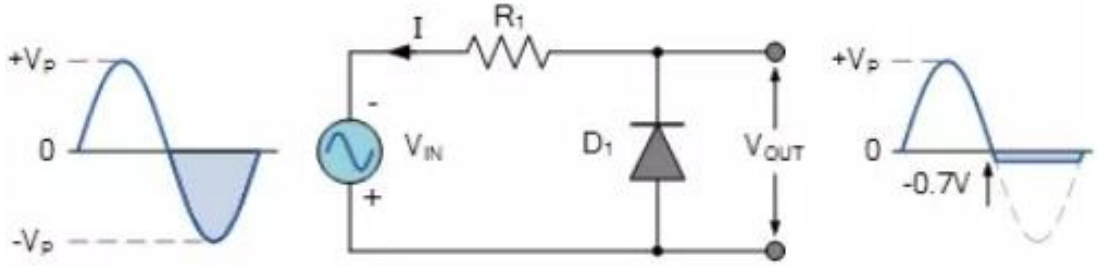

Negative Biased Diode Clipper

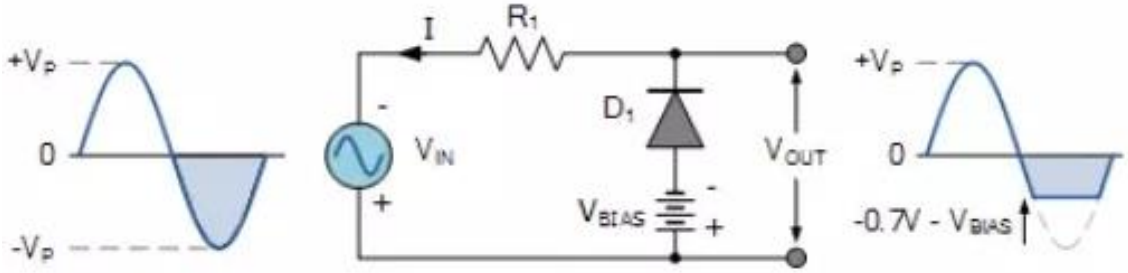

Limiter/Clipper

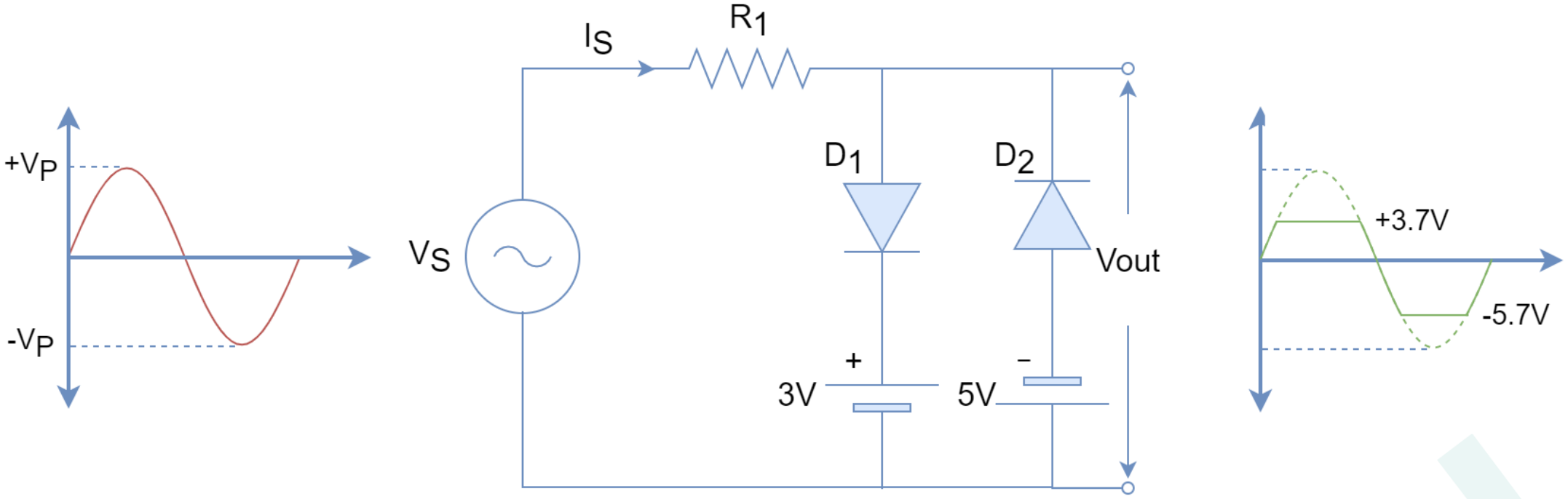

Clipper

Two main Applications

- Changing the shape of a waveform
  - For the generation of new waveforms or shaping the existing waveform, clippers are used.
  - Frequently used half wave rectifier in power supply kits is a typical example of a clipper. It clips either positive or negative half wave of the input.
- Circuit transient protection
  - The excessive noise spikes above a certain level can be limited or clipped in communication transmitters by using the series clippers.
  - The typical application of diode clipper is for the protection of transistor from transients
  - Clippers can be used as voltage limiters and amplitude selectors

Example problem

Assuming the diodes to be ideal, describe the transfer characteristic of the circuit shown in Fig.

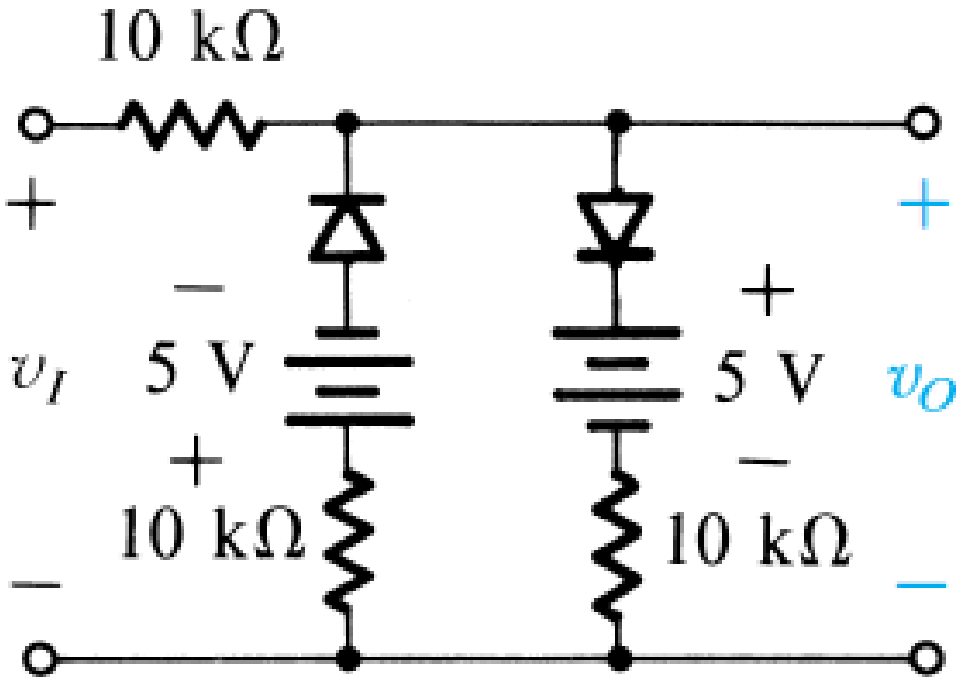

Clamper circuit

- A clamper is an electronic circuit that changes the DC level of a signal to the desired level without changing the shape of the applied signal. In other words, the clamper circuit moves the whole signal up or down to set either the positive peak or negative peak of the signal at the desired level.
- The dc component is simply added to the input signal or subtracted from the input signal. A clamper circuit can add the positive dc component to the input signal to push it to the positive side. Similarly, a clamper circuit can add the negative dc component to the input signal to push it to the negative side.
- The output waveform will have a finite average value or dc component. This dc component is entirely unrelated to the average value of the input waveform.

Clamper circuit

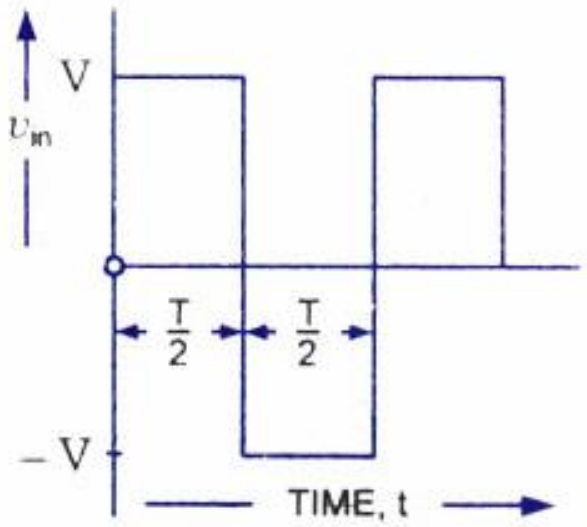

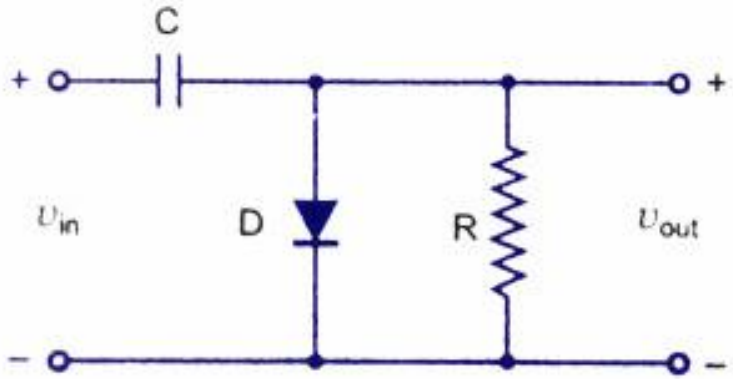

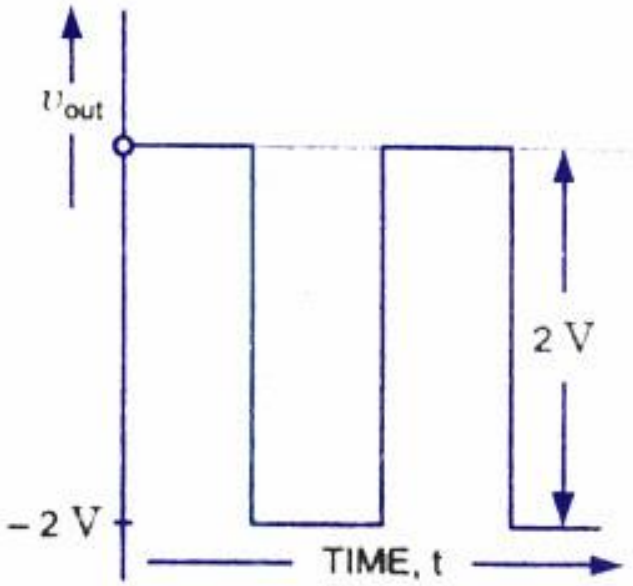

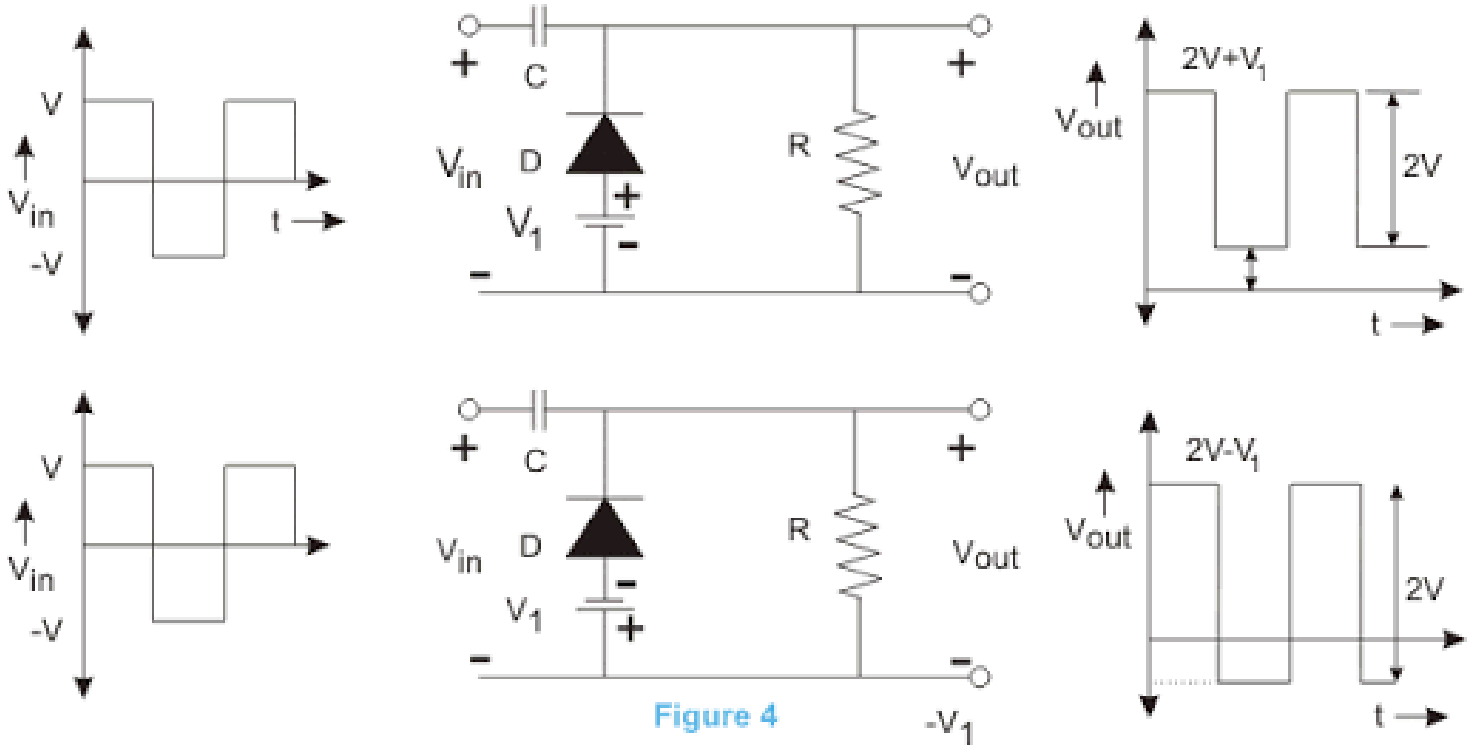
V
Vin
-V
t
+
C
Vin
D
V1
-
R
+
Vout
-
2V+V1
Vout
2V
t
V
Vin
-V
+
C
Vin
D
V1
-
R
+
Vout
-
-V1
2V-V1
Vout
2V
t

Figure 4

Clamper circuit

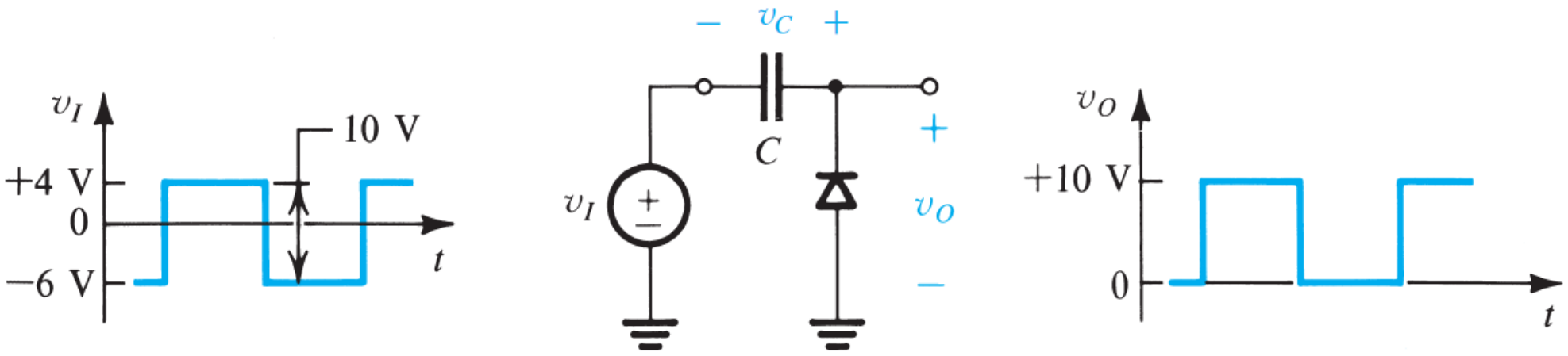

Voltage Multiplier

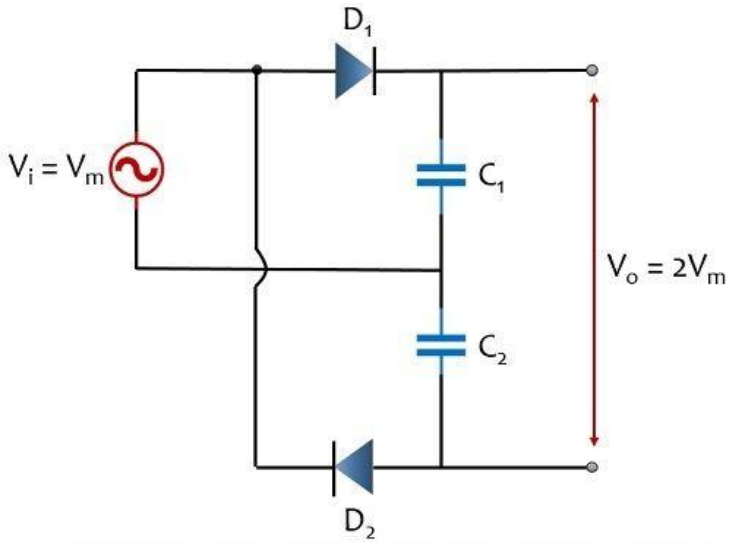

Circuit of full wave voltage doubler

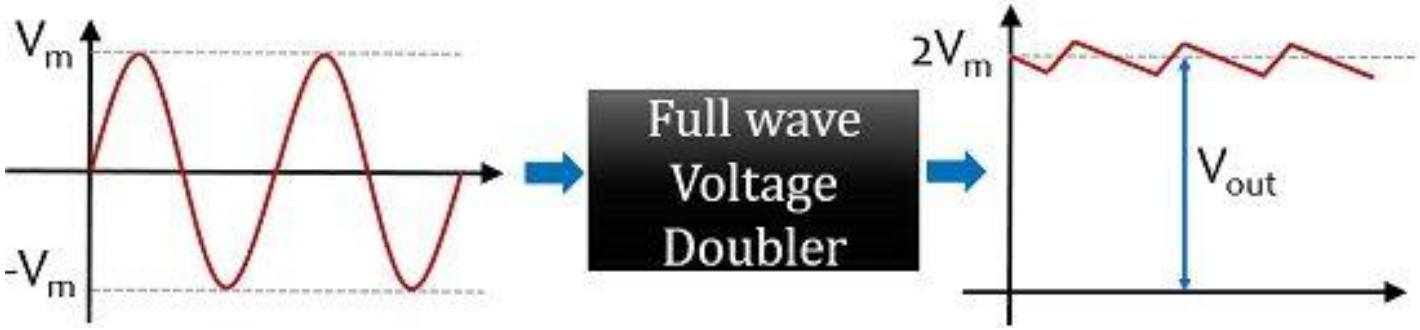

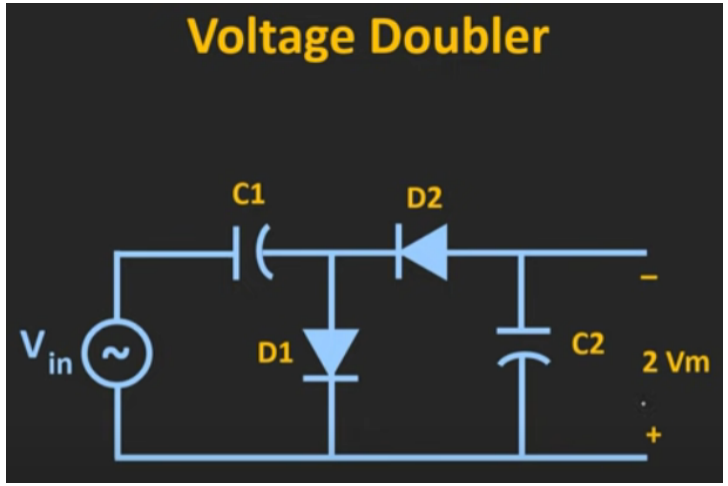

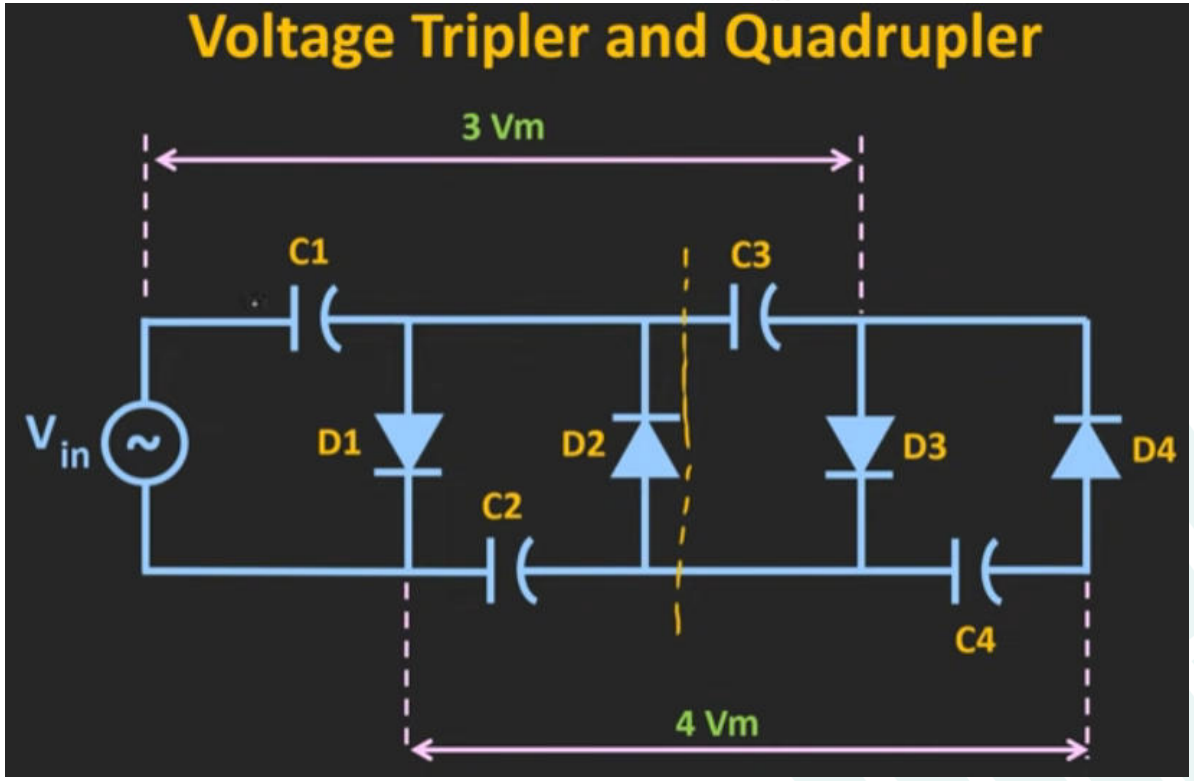

Voltage regulator using Zener diode

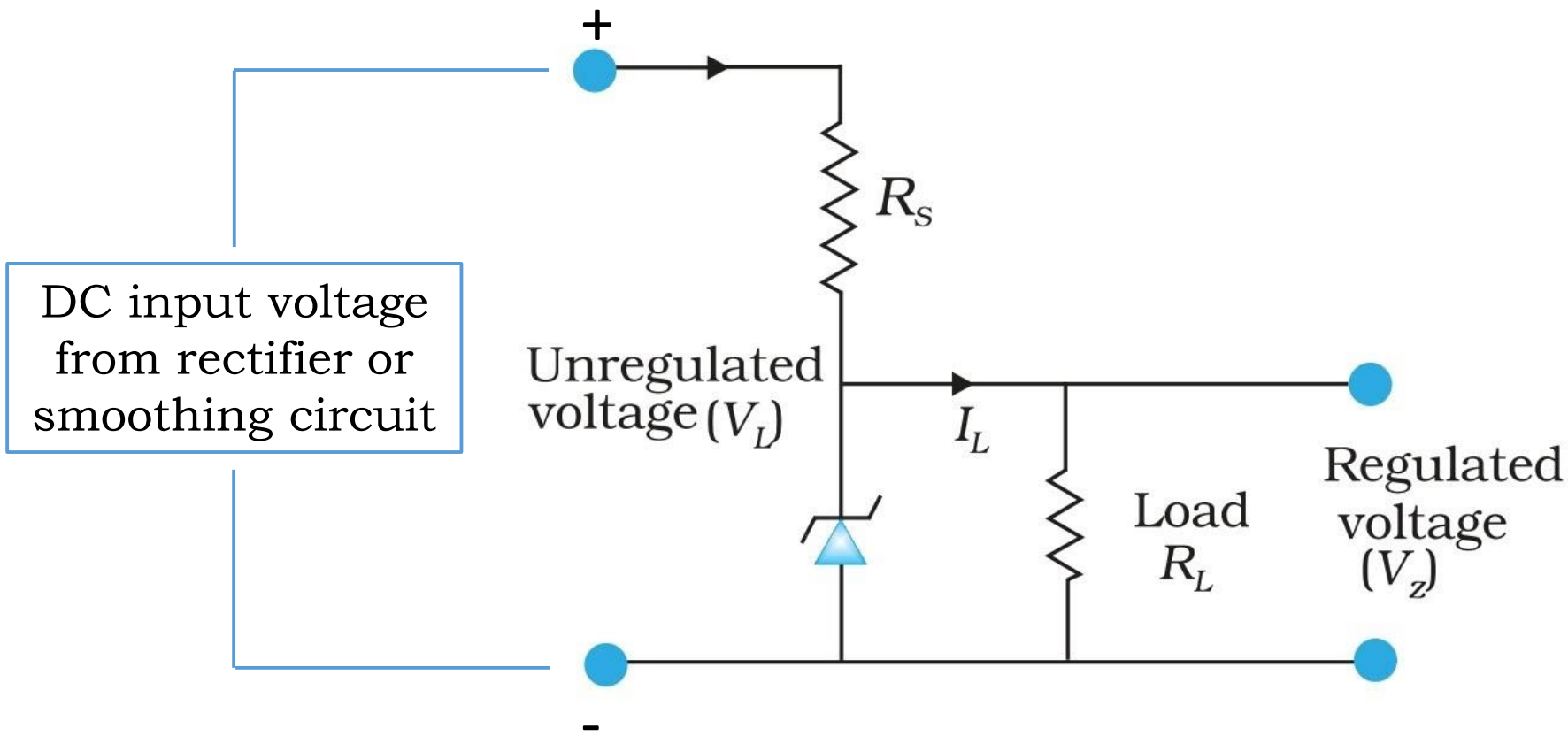

A reliable voltage source

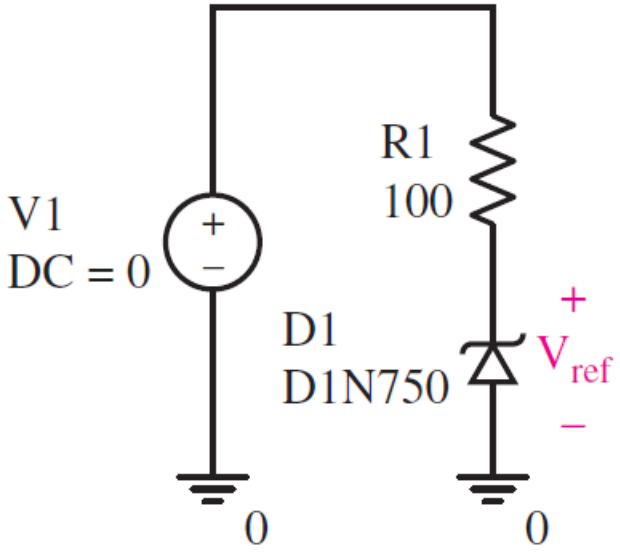

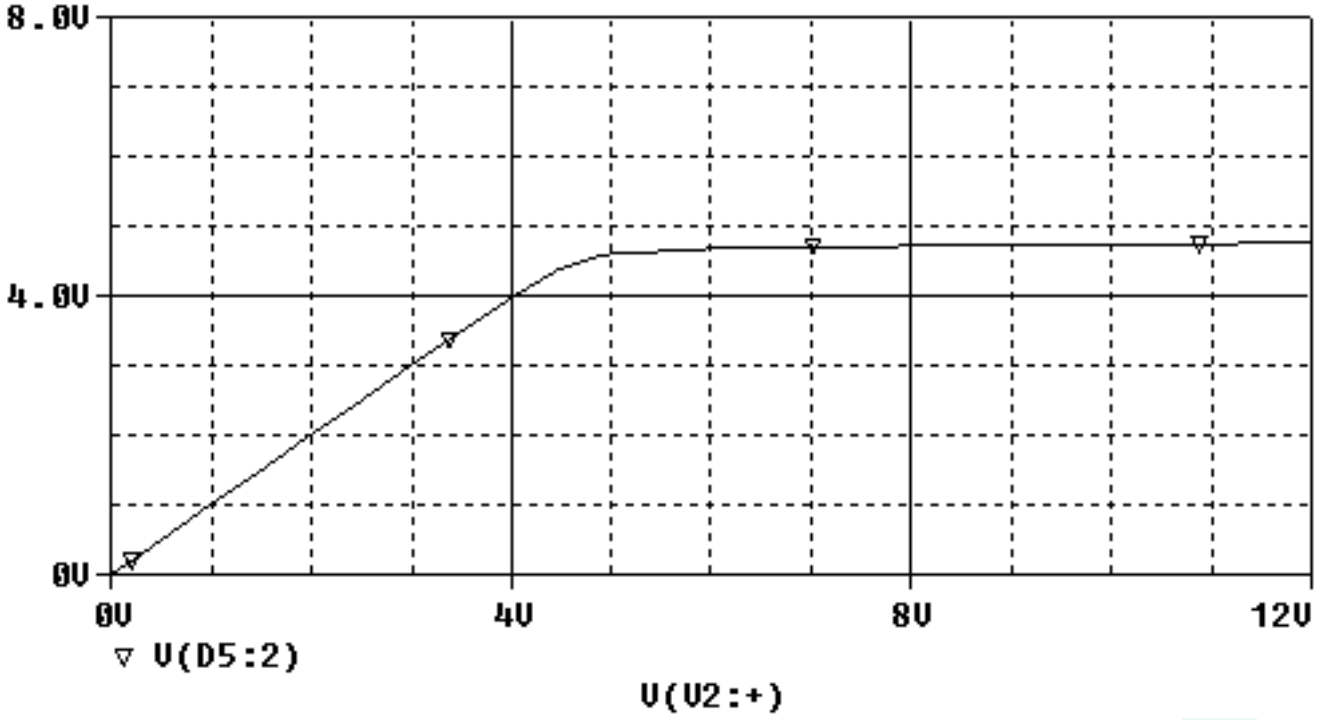

Design problem

Design a circuit based on the 1N750 Zener diode that runs on a single 9 V battery and provides a reference voltage of 4.7 V.

Current rating of 1N750 is 75 mA, Zener voltage is 4.7V

Design problem

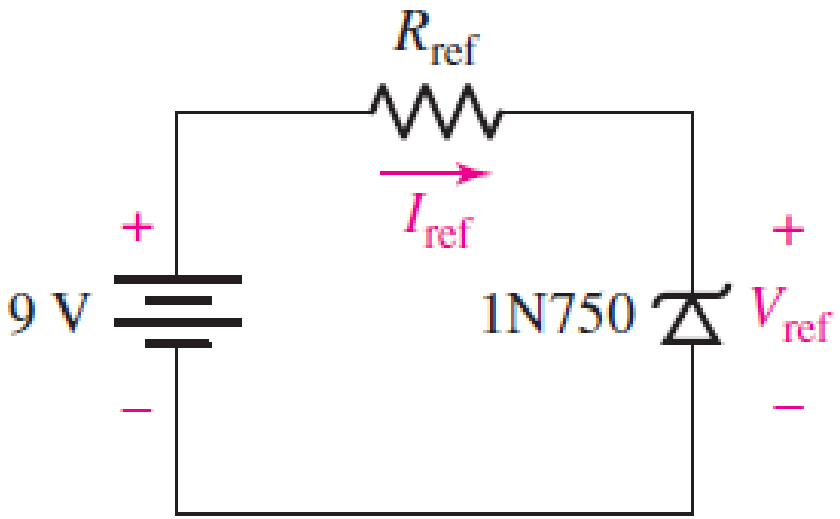

What happens if the load try to draw a lot of current (more than few mA)?

Use op-amp

Design a circuit to provide a reference voltage of 6 V using a 1N750 Zener diode and a noninverting amplifier.

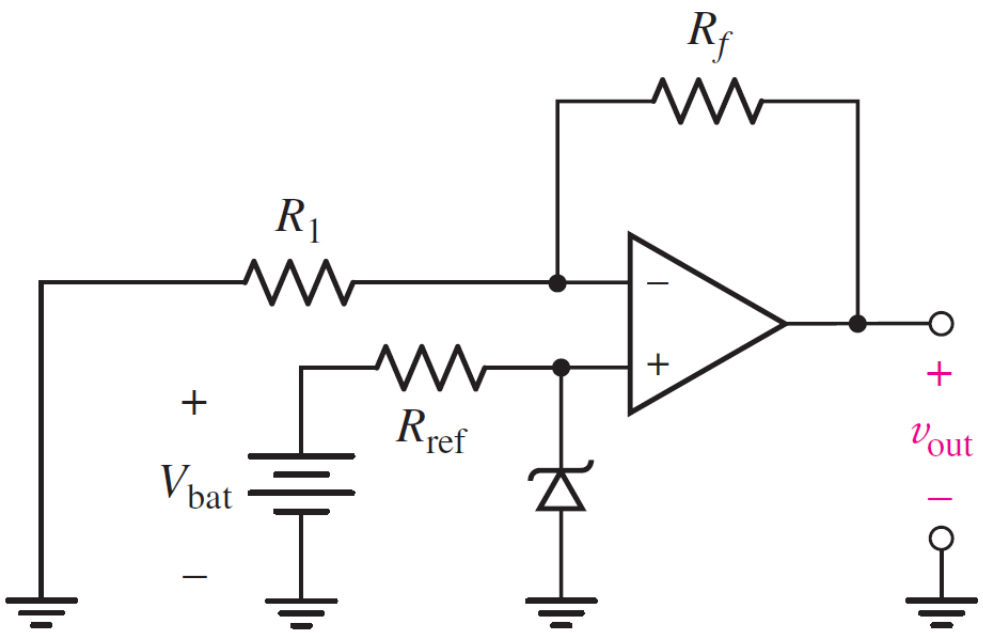

Reliable current source

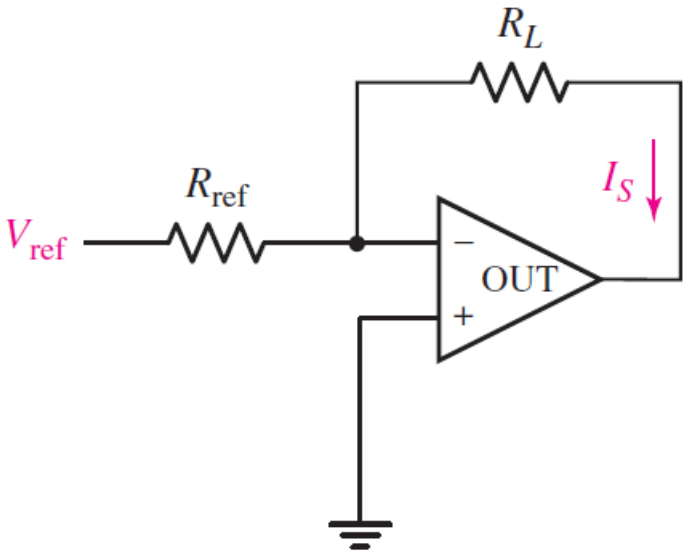

$$I_s = \frac{V_{ref}}{R_{ref}}$$

Design problem

Design a current source that will deliver 1 mA to an arbitrary resistive load.

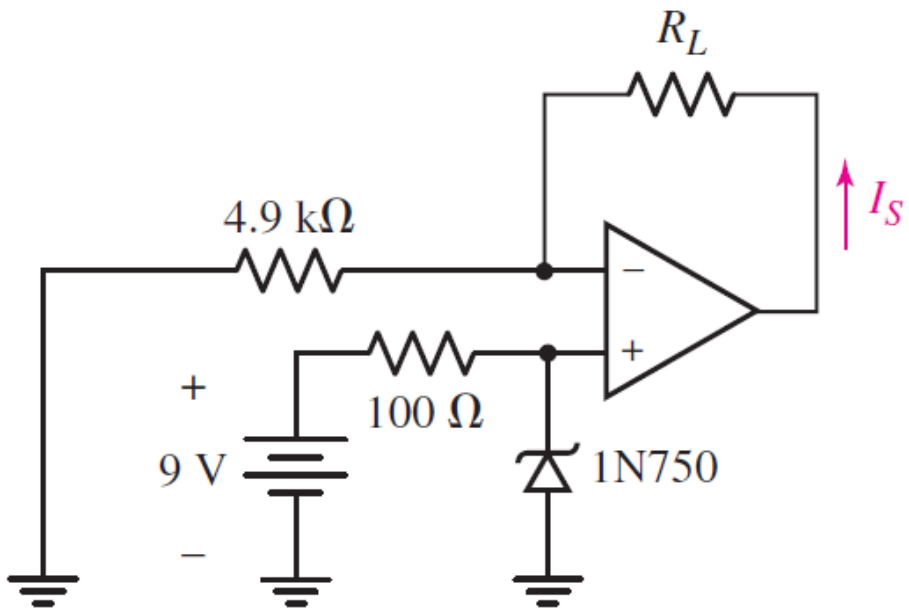

Light Emitting Diodes

- Unlike the light bulb in which electrical energy first converts into heat energy, the electrical energy can also be directly converted into light energy.
- In Light Emitting Diodes (LEDs), electrical energy flowing through it is directly converted into light energy.
- Light Emitting Diodes (LEDs) are the most widely used semiconductor diodes today. Light emitting diodes emit either visible light or invisible infrared light when forward biased. The LEDs which emit invisible infrared light are used for remote controls.

Discussion on p-n junction

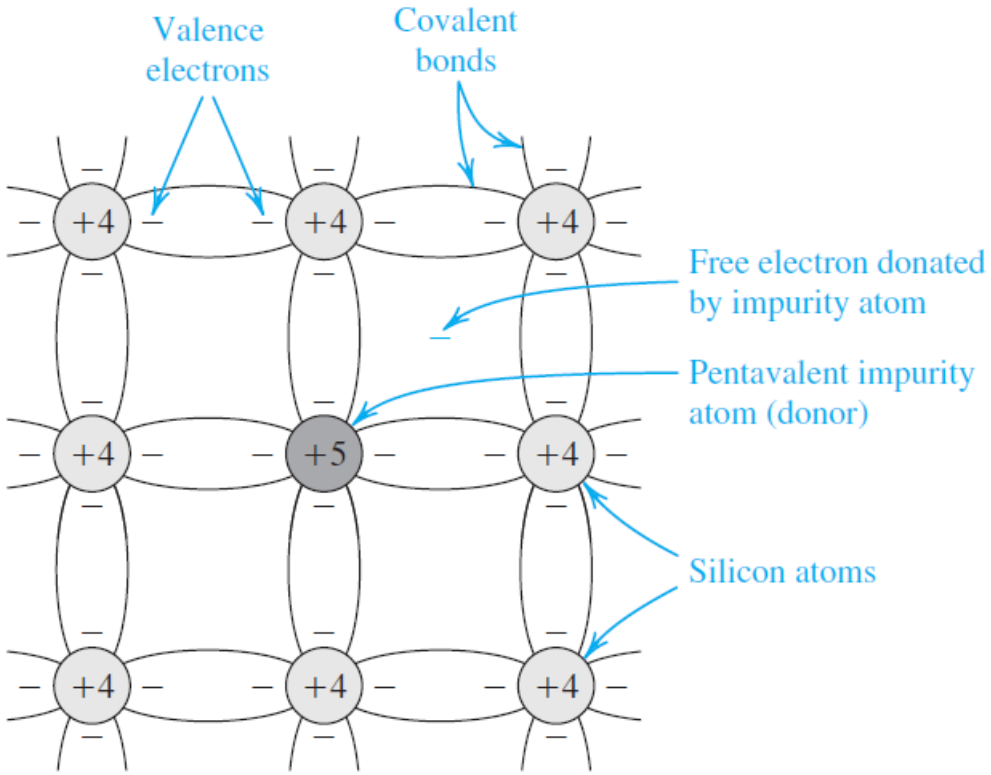

n- type

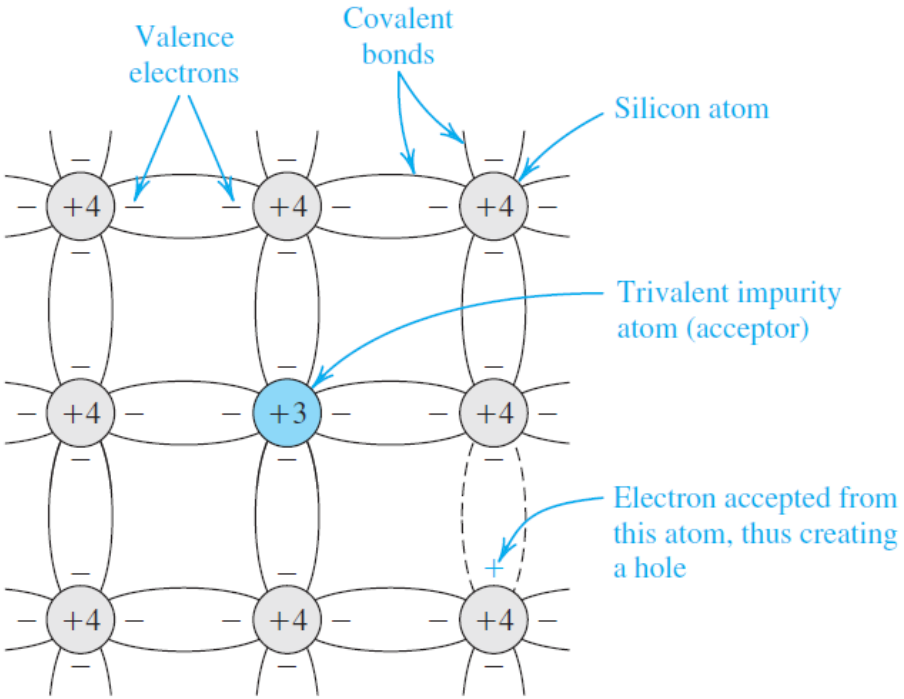

p- type

p-n junction

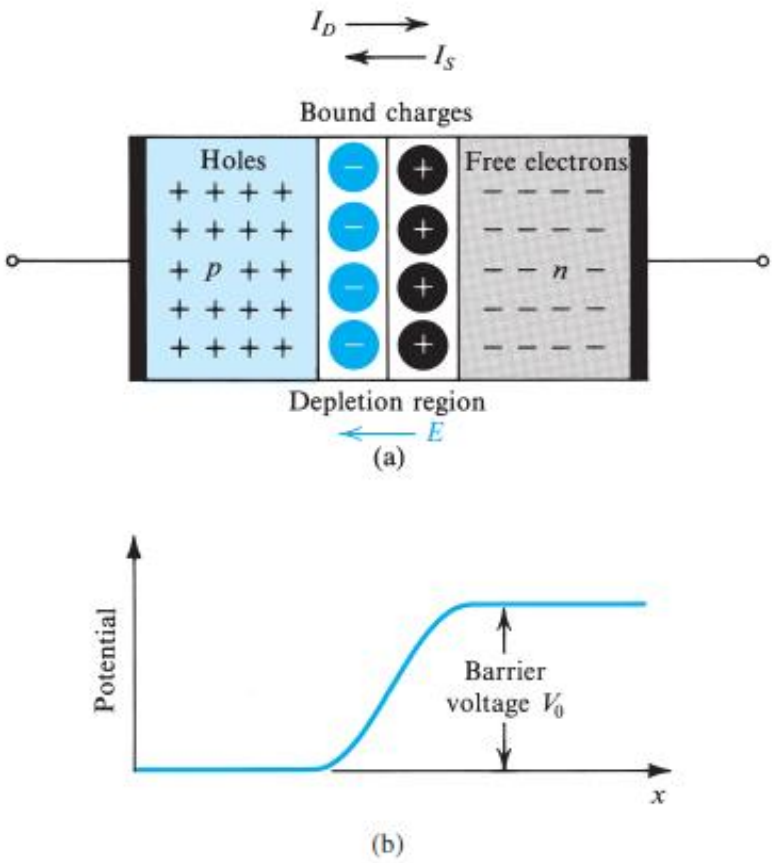

- Due to doping free electrons are available in n-type and holes are available in p-type
- When a p-n junction is created through fabrication, some free electrons diffused to the p-side, and some holes diffused to the n-side, resulting in charge imbalance.
- Net charge remains 0

Various bias conditions

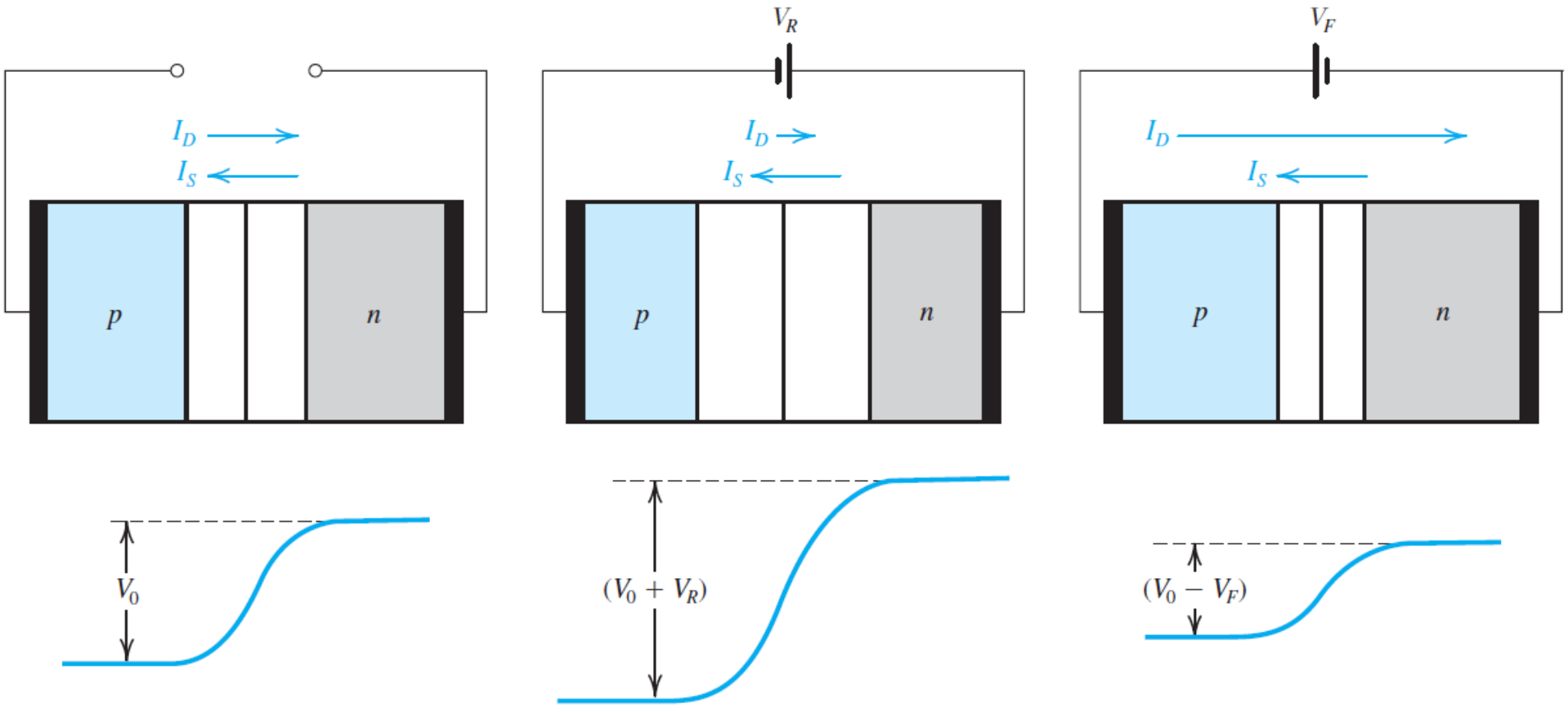

(a) Open-circuit (Equilibrium)

(b) Reverse Bias

(c) Forward Bias

Light Emitting Diode (LED)

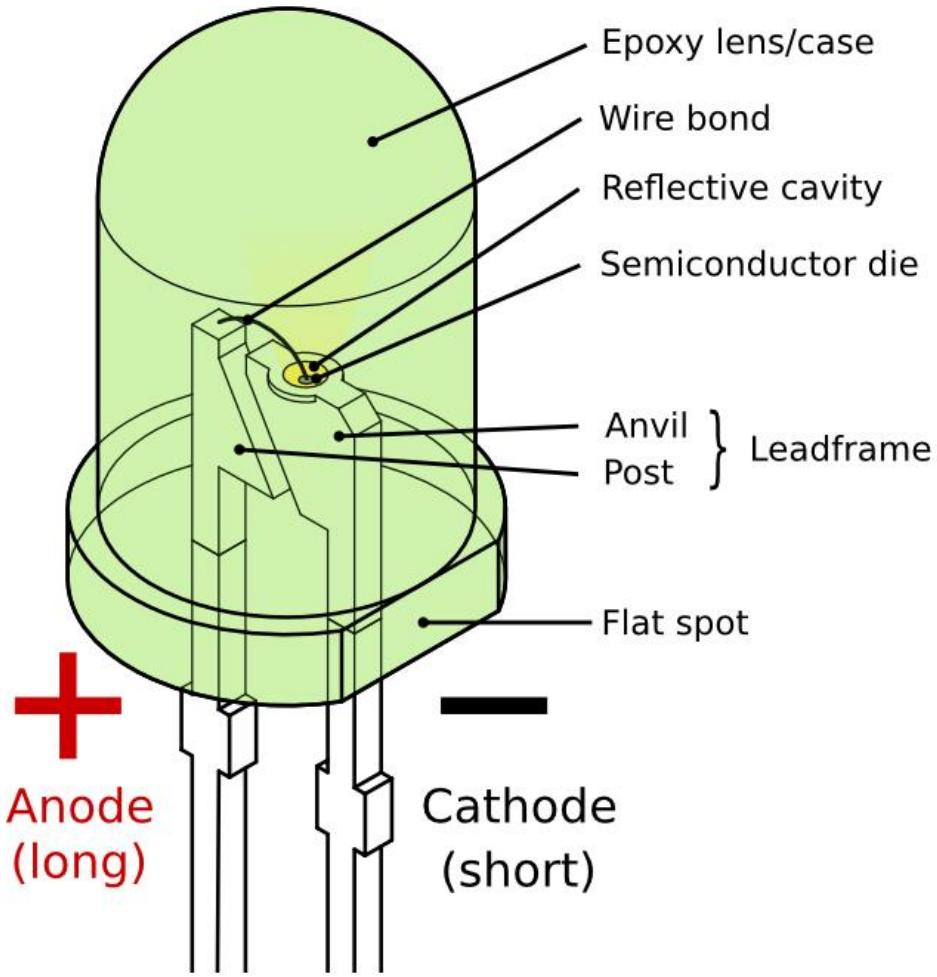

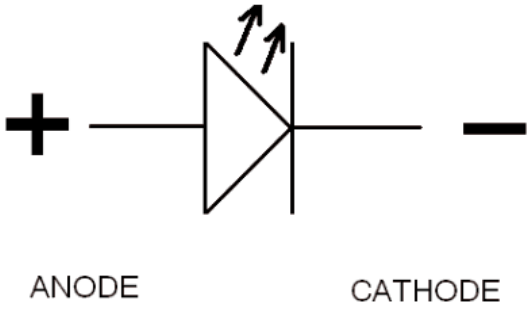

LED

- In forward bias condition, defused minority carrier recombines with the majority carrier.
- Through the recombination process, the electron releases energy governed by the Planck-Einstein equation:

$$\Delta E = h\nu$$

- Semiconductors can be designed in such a way the energy release happens in the visible region of the electromagnetic radiation

Various LED types

There are different types of light emitting diodes present and some of them are mentioned below

- Gallium Arsenide (GaAs) – infra-red
- Gallium Arsenide Phosphide (GaAsP) – red to infra-red, orange
- Aluminium Gallium Arsenide Phosphide (AlGaAsP) – high-brightness red, orange-red, orange, and yellow
- Gallium Phosphide (GaP) – red, yellow and green
- Aluminium Gallium Phosphide (AlGaP) – green
- Gallium Nitride (GaN) – green, emerald green
- Gallium Indium Nitride (GaInN) – near ultraviolet, bluish-green and blue
- Silicon Carbide (SiC) – blue as a substrate
- Zinc Selenide (ZnSe) – blue
- Aluminium Gallium Nitride (AlGaN) – ultraviolet

Applications of LED

- LED is used as a bulb in the homes and industries
- The light emitting diodes are used in the motorcycles and cars
- These are used in the mobile phones
- At the traffic light signals LED’s are used
- TV screens, display monitors etc
- LEDs are also used for Visible light communication

Photodiodes

- A photodiode is one type of light detector, which allows current flow in presence of light. Can be used to convert light signals into electrical signals.
- The photodiode is an important component of a growing family of circuits known as optoelectronics or photonics.
- Combining an LED with a photodiode in the same package results in a device known as an opto-isolator.
- Operates in reverse-bias

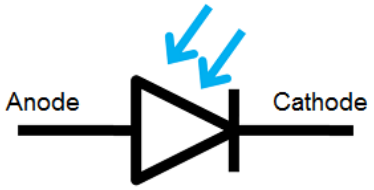

Photodiode symbol

Photodiode applications

- Smoke detectors
- Space applications – Inter-satellite optical link, laser ranging, LIDAR
- Photodiodes are used in medical applications such as computed tomography, instruments to analyze samples, and pulse oximeters
- Photodiodes are used for optical communications
- Photodiodes are frequently used for exact measurement of the intensity of light in science & industry

Solar cell/ Photovoltaic cells

- Works in unbiased mode
- The covalent bond in the depletion region of a p-n junction can break when energy is absorbed
- For Gallium arsenide based semiconductor, this bond can break in the visible spectrum and electron-hole pairs are created.
- These pairs creates reverse current flow, i.e. optical energy is converted into electrical energy

Solar cell/ Photovoltaic cells

There are three qualitative differences between a solar cell and photodetector

1. A photodiode works on a narrow range of wavelength while solar cells need to work over a broad spectral range (solar spectrum).
2. Solar cells are typically wide area devices to maximize exposure.
3. In photodiodes the metric is quantum efficiency, which defines the signal to noise ratio, while for solar cells, it is the power conversion efficiency

https://nptel.ac.in/courses/113106062/Lec19.pdf

Example
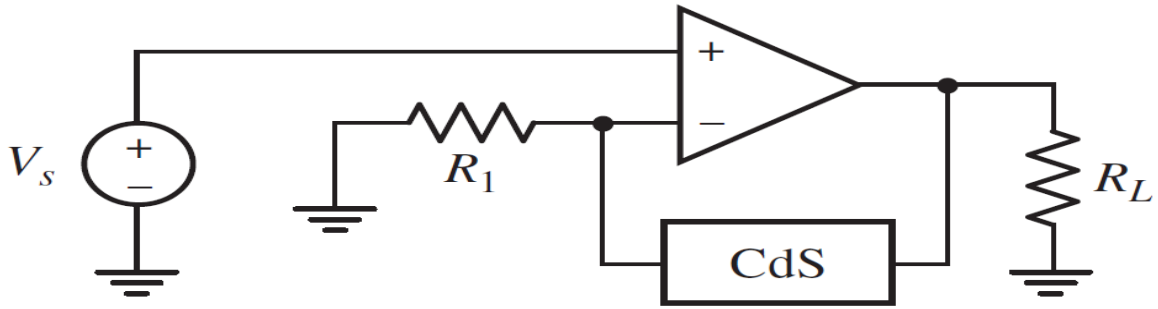
Cadmium sulfide (CdS) is commonly used to fabricate resistors whose value depends on the intensity of light shining on the surface. In Fig. 6.61 a CdS "photocell" is used as the feedback resistor R_f. In total darkness, it has a resistance of 100 kΩ, and a resistance of 10 kΩ under a light intensity of 6 candela. R_L represents a circuit that is activated when a voltage of 1.5 V or less is applied to its terminals. Choose R_1 and V_s so that the circuit represented by R_L is activated by a light of 2 candela or brighter.