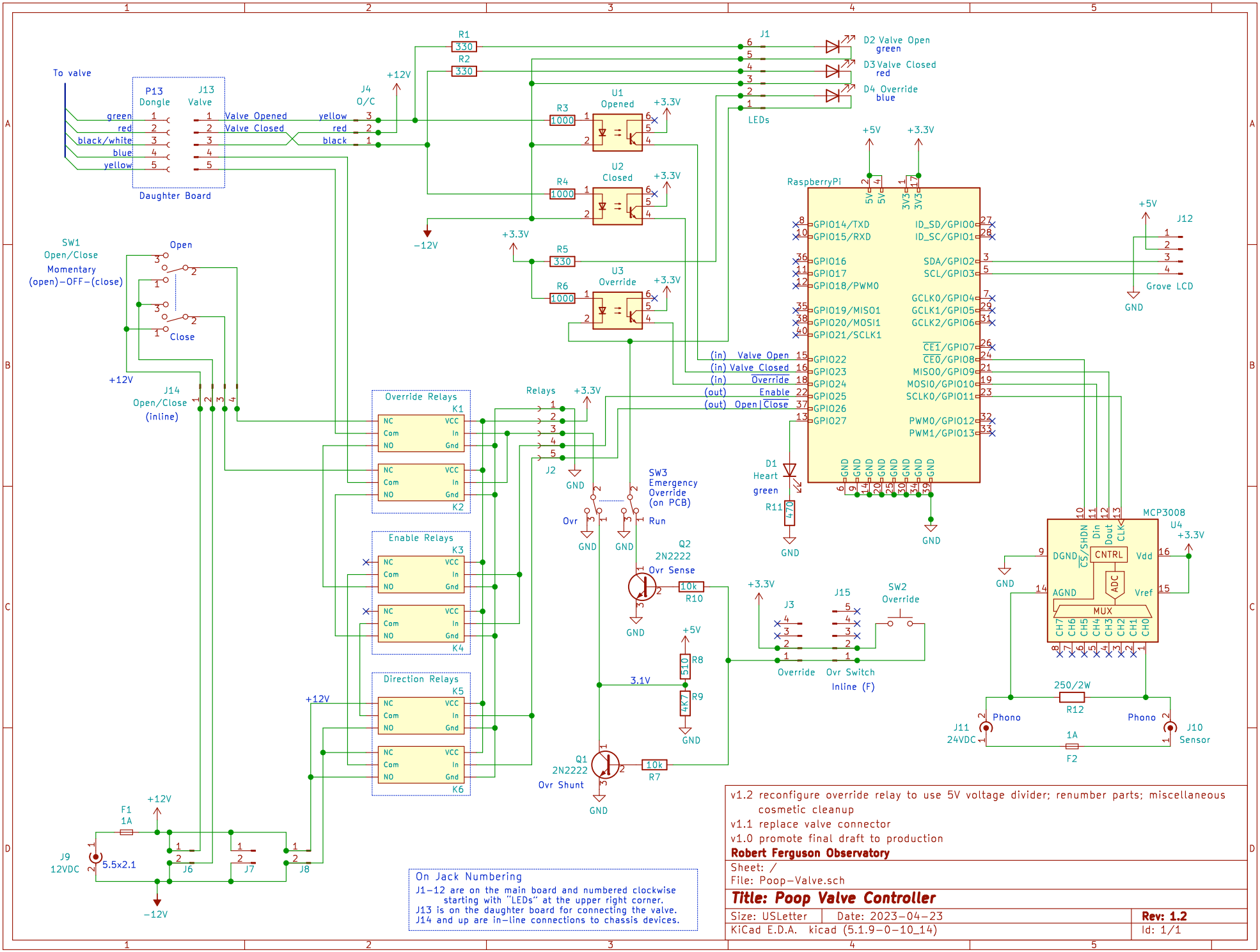

v1.2 reconfigure override relay to use 5V voltage divider; renumber parts; miscellaneous cosmetic cleanup
v1.1 replace valve connector
v1.0 promote final draft to production

Robert Ferguson Observatory

Sheet: /
File: Poop−Valve.sch

Title: Poop Valve Controller

Size: USLetter	Date: 2023−04−23	**Rev: 1.2**
KiCad E.D.A. kicad (5.1.9−0−10_14)		Id: 1/1