Some Placeholder Title

A Master Thesis

written by

Victor Melbye Staven
vista17@student.sdu.dk

The code for this project is available at
`https://github.com/vmstavens/in_hand_pose_estimation`

University of Southern Denmark
The Technical Faculty

Word Count : 962
February 4, 2023

Abstract

Some abstract text explaining the goal, methods and conclusion of the project.

Contents

Acknowledgments ii
Acronyms and Terms iii

1 Introduction **1**
1.1 Context 1
1.2 Problem Description 1
1.3 Thesis Overview 3

2 Modeling **4**

3 State of the Art **7**
3.1 Problem 1 - Tactile Perception 7
3.2 Problem 2 - Pose Estimation 8
3.3 Problem 3 - In-Hand Manipulation 8

4 Tactile Perception **9**
4.1 Introduction 9
4.2 Related Work 9

5 Pose Estimation **10**
5.1 Introduction 10
5.2 Related Work 10

6 In-Hand Manipulation **11**
6.1 Introduction 11
6.2 Related Work 11

7 System Integration **12**
7.1 Introduction 12

8 Discussion **13**

9 Conclusion **14**

A Appendix A Title **20**

Acknowledgements

My acknowledgements

Acronyms

AEBM analytical elasticity-based models.
cobots collaborative robots.
CP correspondence problem.
CV computer vision.
DL deep learning.
DOF degrees of freedom.
EE end effector.
EFM elastic foundation models.
FEM finite element models.
HF hard finger.
IEP Inverse Elasticity Problem.
MIM Matrix Inversion Method.
ML machine learning.
PE pose estimation.
PNP pick-and-place.
PwoF point-contact-without-friction.
SF soft finger.
SOTA state of the art.

Terms

collaborative robots (cobots) are robots which facilitate human-robot collaboration [1].

computer vision (CV) is a field of artificial intelligence (AI) that enables computers and systems to derive meaningful information from digital images, videos and other visual inputs - and take actions or make recommendations based on that information [2].

correspondence problem (CP) is the problem where one aims at finding correspondences between the pixels in two (or more) images [3].

deep learning (DL) are methods that allow computational models that are composed of multiple processing layers to learn representations of data with multiple levels of abstraction [4].

end effector (EE) is a generic term for all functional units involved in direct interaction of the robot system with the environment or with a given object [5].

manipulator : A serial robot mechanisms. The robot manipulator is represented by a serial chain of rigid bodies, called robot segments, connected by joints [6].

pose estimation (PE) A particular instance of feature-based alignment, which occurs very often, is estimating an object's 3D pose from a set of 2D point projections. This pose estimation problem is also known as extrinsic calibration [7].

Chapter 1

Introduction

1.1 Context

As of 2022 most of the industrialized world has developed tools for unprecedented growth in wealth and technology on a global scale [8, Chapter 4]. In such times a great deal of consumerism and interconnection is present with people needing products produced faster and more consistently than ever before [8, Chapter 4]. As one would expect, this creates a high demand for manufacturers to reliably and consistently provide products, while also remaining flexible as the demand for different product change rapidly. To accommodate the need for ever-greater volumes of products, consistent, reliable and flexible labor is essential in assembly, transport and manipulation processes in the production pipeline. Due to these types of manual labor being largely done by unskilled workers, automation alternatives are being adopted which provide benefits [8, Chapter 4]. This different approach to manufacturing has been labeled the fourth industrial revolution or i4.0 for short. The beneficiaries are the employer and employee, with the employer having the benefits: Avoid paying monthly salaries to unskilled laborers doing manual tasks, here the automation alternative only requires electrical energy and potential supervision by a few qualified individuals. Potential risks are also involved when hiring humans as the workforce can be inconsistent due to human error [9] or left out due to illness etc. Considerations about workers' rights such as working conditions and wages also need not be considered. Workers furthermore cause production limitations in the form of stand-still hours, such as bathroom and lunch breaks along with after-work hours and holidays. This replacement of manual labor also potentially benefits the employee, as boring and physically wearing work is automated, enabling the employees to take on different and less wearing and potentially dangerous roles. While the issue of labor unemployment becomes apparent solutions that provide support to already hired workers have been developed, such as collaborative robots (cobots) [10] which would negate this problem.

When implementing automation of production lines using robotics, certain categories of problems are revealed. These include assembly, alteration and pick-and-place (PNP), the last being the one of interest in this project.

1.2 Problem Description

Pick-and-place manipulators are used in a wide variety of different fields such as sorting of waste [11] handling of food [12, 13] and factory bin picking [14, 15, 16]. The solutions in these industries are examples of subcategories under the PNP problem, namely sorting and bin picking. Since both of these are subcategories of the PNP problem, they fundamentally follow the same sequential four phases from start to end. These phases are pre-grasping, grasping, transport, and placement [15] for traditional implementations of the PNP pipeline. The pre-grasp phase involves localizing the object(s), potentially estimating their pose and executing the trajectory to move the end effector (EE) grasp, collision-free to said object(s). Here different potential grasps can be considered to determine the best pose for the EE. In the grasping phase, the EE gasps the object in such a manner that the object's entire weight is supported by the EE, and ends when the object no longer is in contact with the environment, which often is the container holding the object. The transportation phase involves the motion of the manipulator to move from the pose achieved after the grasping phase, to a pose ready for placement of the object in the desired placing area or fixture. Here considerations may be needed about how much force and torque the EE's grasp can tolerate while moving without losing the object. Finally, the goal of the placing phase is to place the object within the placing

area or fixture in a desired end pose. Here the constraints on the end pose might differ significantly based on the application, as the pose of greens in a crate might need less precision than if the manipulator hands a bolt to another robotics system in the pipeline.

While these phases make up a traditional PNP system, certain assumptions are made regarding the objects of interest for this pipeline to function. Specifically, the localization and pose estimation (PE) of the pre-grasp phase are assumed possible due to either ensured object poses or estimated poses through computer vision (CV) sensory system. Due to CV being a mature research field a wide range of solution proposals to these problems have been generated [17]. These include classic vision [18, 19], deep learning (DL) based [20] and combinations of these [21]. However, while these may be sufficient for certain tasks they fundamentally suffer from the weaknesses introduced by vision techniques. These are a great number of outliers caused by: occlusions, reflecting, transparent or homogeneous surfaces, and repetitive structures when solving the correspondence problem (CP). Within factory settings, the common ones are transparent and reflective objects, due to metallic, plastic and glass products often being the materials used. While DL solutions have been developed for both reflective [22] and transparent [23] objects, these are use case specific and show limited results in a wider range of applications.

This project suggests a different PNP pipeline for cases where the object's starting pose is unknown. In this PNP pipeline the PE is moved from the pre-grasping phase to a new phase between the grasping and transportation phase, called the PE phase. The specific goal of this project is to develop a solution to this phase using tactile sensors in the EE to determine the object's pose. By using tactile sensing rather than visual the problems presented above will be eliminated. This will be done using a humanoid gripper as the EE with tactile sensors in each finger, more specifically a Shadow Dexterous Hand [24] with 20 degrees of freedom (DOF).

The alternative pipeline this project will enable can be seen in the upper row of Fig. 1.1 compared to the traditional pipeline in the lower row.

In Fig. 1.1(a) the pre-grasping phase can be seen for both pipelines. Here the traditional pipeline in cases of multiple objects often will employ custom fingertips or grippers entirely to facilitate form closure grasps, due to the grippers not having the flexibility to perform reliable force closure. On the contrary force closure can be performed with a humanoid gripper on a wide range of objects with no need for changing gripper equipment.

In Fig. 1.1(b) the grasping phase can be seen which introduces a greater level of complexity when using the suggested pipeline due to the humanoid gripper being a more complex physical system to represent and control. This is compared to the simplicity of executing potential binary commands in the traditional pipeline e.g.open and close.

In Fig. 1.1(c) the transportation phase can be seen, which introduces one of the benefits of using the suggested pipeline. Here tactile sensors in a humanoid gripper can pose and estimate the object and manipulations can be performed to change the object's pose such that easier placement can be performed in the following phase. This form of object manipulation is not feasible for the simple pneumatic grippers used in a traditional pipeline.

In Fig. 1.1(d) the placement phase can be seen, which demonstrates the result of the previous phase, as the traditional pipeline now has to change the grip on the object to properly place it in the socket, while the humanoid gripper simply can insert the part, as it is already oriented properly.

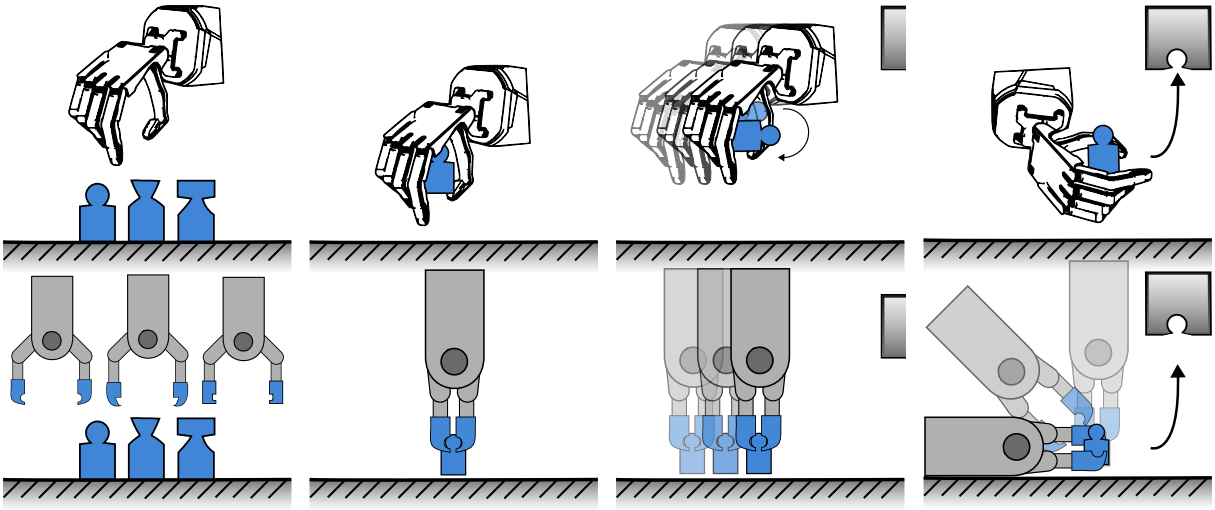

(a) Pre-grasp phase. **(b)** Grasping phase. **(c)** Transportation phase. **(d)** Placement phase.

Fig. 1.1: A comparison between the traditional and suggested PNP pipeline.

To solve this PE problem, three sub-problems are identified and labeled problems 1, 2 and 3.

Problem 1 involves modeling the contact between the gripper's tactile sensors and the object, also referred to as tactile perception.

Problem 2 is to convert the collected data from problem 1 to estimated pose candidates.

Problem 3 involves in-hand manipulation. Since the initial grasp of the object might not be oriented in a manner where the recognizable features make context with the tactile sensors, manipulating the object within the EE's grasp will enable further information gathering. Thus the final problem is to control the EE in such a manner that the tactile sensors make context with the object in intelligently decided areas for a better pose estimate.

To test if the developed system successfully solves the PE problem, it is hypothesized that the intelligent probing method provides a statistically significant faster average PE convergence, along with a statistically significant greater success rate when determining the correct pose. A correct pose is here defined as the pose being greater than or equal to 95 % of the ground truth pose, and statistically significant is defined by an α-level of 95 %. This hypothesis will be referred to as H_1, while the null hypothesis H_0 being that there is no statistically significant difference between intelligent and random probing's PE performance as described above.

1.3 Thesis Overview

To present the work done in this project, the system modeling is done in Chapter 2 and state of the art (SOTA) is presented in Chapter 3 for each of the problems presented above. Here the solutions best suited for this project's gripper are chosen. Each solution is described in detail, how they are applied, their performance tested and finally evaluated and concluded upon in their respective chapters i.e. chapter Chapter 4, Chapter 5 and Chapter 6. In Chapter 7 the three methods are combined in the final integration and finally, the project is discussed and concluded upon in Chapter 8 and Chapter 9 respectively.

Chapter 2

Modeling

To model the contact between the EE's tactile sensors, eight different model categories are present [25] whereas the three most common ones within the field of robotics [26, Chapter 37] are point-contact-without-friction (PwoF), hard finger (HF) and the soft finger (SF) model as shown in Fig. 2.1.

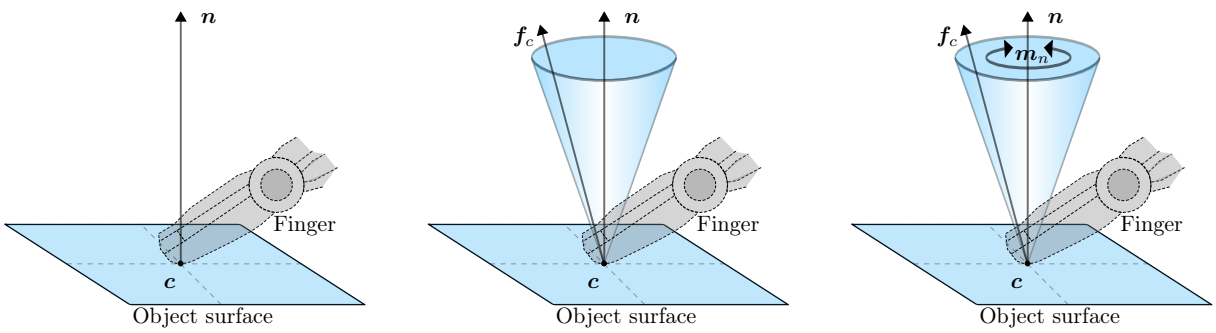

(a) PwoF in point $\boldsymbol{c}$ with normal $\boldsymbol{n}$.

(b) HF in point $\boldsymbol{c}$ with normal $\boldsymbol{n}$ and contact force $\boldsymbol{f_c}$.

(c) SF in point $\boldsymbol{c}$ with normal $\boldsymbol{n}$, contact force $\boldsymbol{f_c}$ and friction moment $\boldsymbol{m_n}$.

Fig. 2.1: The three most commonly used contact models.

The PwoF model, as shown in Fig. 2.1(a), can only represent forces along with the normal $\boldsymbol{n} \in \mathbb{R}^3$ of the object's surface at the point of contact and thus the model does not support surface deformations between the two contacting objects. This model is applied in cases where very little deformation is present, along with the contact having a friction coefficient approximately equal to zero [26, Chapter 38].

The HF model, as shown in Fig. 2.1(b), is representative when the friction between objects is great enough to be significant, while the contact deformation is small enough to ignore friction moments and deformations [26, Chapter 38]. To model the friction acting on the contact point a great number of methods exist, a common one being the Coulomb friction with different modifications depending on the use case [27]. This model states that the frictional force acting on an object can be formulated as

$$f_f = f_N \mu, \tag{2.1}$$

with f_f being the Coulomb friction, f_N being the normal force in the point of contact and $\mu \in [0, 1]$ being the friction coefficient. One visualization of this linear relationship can be seen in the cones illustrated in Fig. 2.1(b) and Fig. 2.1(c). These cones are referred to as friction cones, which for a hard finger model can be formulated as

$$C_{f,\mathrm{HF}} = \left\{ f_c \;\middle|\; f_t \leq \mu f_z,\ \mu f_z \geq 0 \right\} \qquad , \qquad f_t = \sqrt{f_x^2 + f_y^2}. \tag{2.2}$$

Here f_c is the magnitude of the contact force, f_t is the magnitude of the tangential force, f_x, f_y and f_z are the magnitudes of the x, y and z components of the contact force ($\boldsymbol{f_c} \in \mathbb{R}^3$) and μ is the friction coefficient [26, Chapter 37]. Thus by applying a contact force with a normal component i.e. f_z such that $f_z\mu$ stays greater than the magnitude of the tangential component f_t, the friction force will remain great enough to ensure neither object slips. Visually this is the case when the contact force $\boldsymbol{f_c}$ stays within the friction cone, which is a grasp type referred to as force closure. A force that commonly contributes significantly to the tangential force is gravity when the object is held purely through friction.

The SF model, as shown in Fig. 2.1(c), is used to represent scenarios where both friction and surface deformations are great enough to be impactful in the behavior of the system. Due to deformations of the finger, an additional torsional moment about the contact normal will be present [26, Chapter 38]. While an analytical formulation for the SF relation depends on the pressure distribution inside the contact, and can only be derived for a limited number of special cases, the general case is approximated using

$$C_{f,\mathrm{SF}} = \left\{ f_c \;\middle|\; f_t^2 + \frac{m_n^2}{e_n^2} \leq \mu^2 P^2 \right\} \qquad , \qquad f_t = \sqrt{f_x^2 + f_y^2}. \tag{2.3}$$

This formulation forms an ellipsoid $C_{f,\mathrm{SF}}$ describing the relation between the tangential force $\boldsymbol{f}_t \in \mathbb{R}^3$ and friction moment $\boldsymbol{m}_n \in \mathbb{R}^3$. Here f_c is the magnitude of the contact force, f_t is the magnitude of the tangential force, m_n is the magnitude of the frictional moment, e_n is the eccentricity parameter i.e. the height of the aforementioned ellipsoid, μ is the friction coefficient and P is the magnitude of the pressure applied from the contact point along the contact normal $\boldsymbol{n}$ [28, 29].

Based on the contact model categories described above, the most representative is the SF models since these can provide descriptions of the contact surface shape, and thus enable the reconstruction of the contact shape from the application of a force distribution [30] i.e. the Inverse Elasticity Problem (IEP). Furthermore, friction is crucial to manipulate objects in hand, which is also provided by these models. An illustration of the system as a SF with friction cone and pressure distribution can be seen in Fig. 2.2, while Fig. 2.3 shows the model enabling force closure i.e. the composite wrench cone contains the entire wrench space so that any external wrench $\boldsymbol{w}_{\mathrm{ext}}$ on the body can be balanced by contact forces [31].

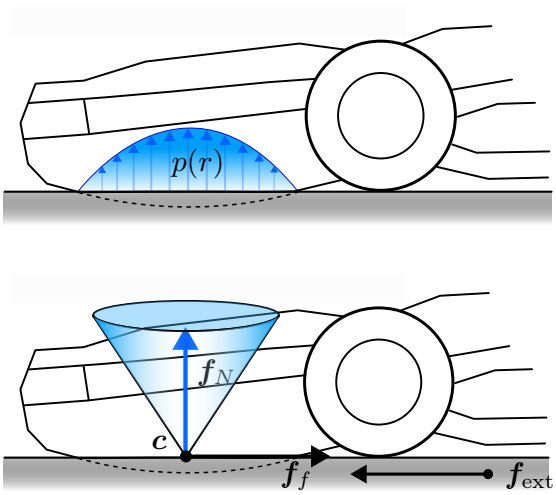

Fig. 2.2: Contact pressure distribution and friction cone for a SF model in the context of a robotic finger.

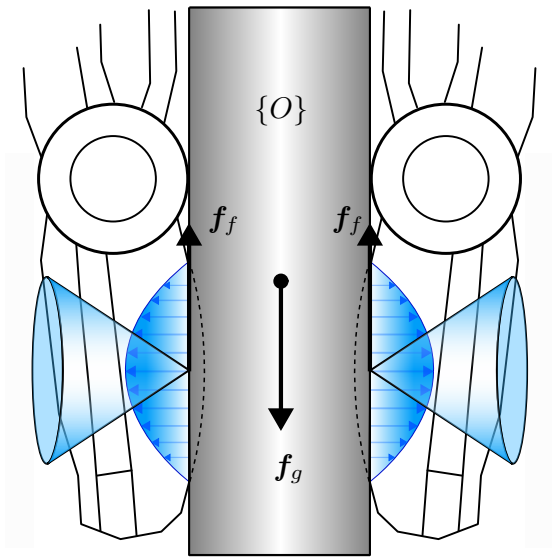

Fig. 2.3: Contact pressure distribution and friction cone causing force closure to prevent the object $\{O\}$ from falling due to gravity.

When modeling the kinematics of a humanoid gripper with frame $\{H\}$ in world frame $\{W\}$ interacting with an object with frame $\{O\}$ the different parameters and modeling are necessary. In this system the object with position $\boldsymbol{p} \in \mathbb{R}^3$ and pose $\boldsymbol{u} \in \mathbb{R}^6$, with the orientation either being represented as a four-dimensional quaternion or a three-dimensional Euler angle, makes contact with the gripper in points $\boldsymbol{c}_i$. Said contact points have frames $\{C\}$ with axes $\{\boldsymbol{n}_i, \boldsymbol{t}_i, \boldsymbol{o}_i\}$, where $\boldsymbol{n}_i$ points perpendicular to the contact plant towards the object while the remaining are contained within the contact plane. The twist of $\{O\}$ described in $\{W\}$ is denoted $\boldsymbol{\nu} = \left[\boldsymbol{v}^\top \; \boldsymbol{\omega}^\top\right]^\top \in \mathbb{R}^6$ while the non-contact wrench i.e. the wrench caused by external forces such as collisions with the environment and gravity, is $\boldsymbol{w} = \left[\boldsymbol{f}^\top \; \boldsymbol{m}^\top\right]^\top \in \mathbb{R}^6$.

The gripper has n_q joint named $\boldsymbol{q} = \left[q_1,\ q_2,\ \ldots,\ q_{n_q}\right]^\top \in \mathbb{R}^{n_q}$ with loads $\boldsymbol{\tau} = \left[\tau_1,\ \tau_2,\ \ldots,\ \tau_{n_q}\right]^\top \in \mathbb{R}^{n_q}$.

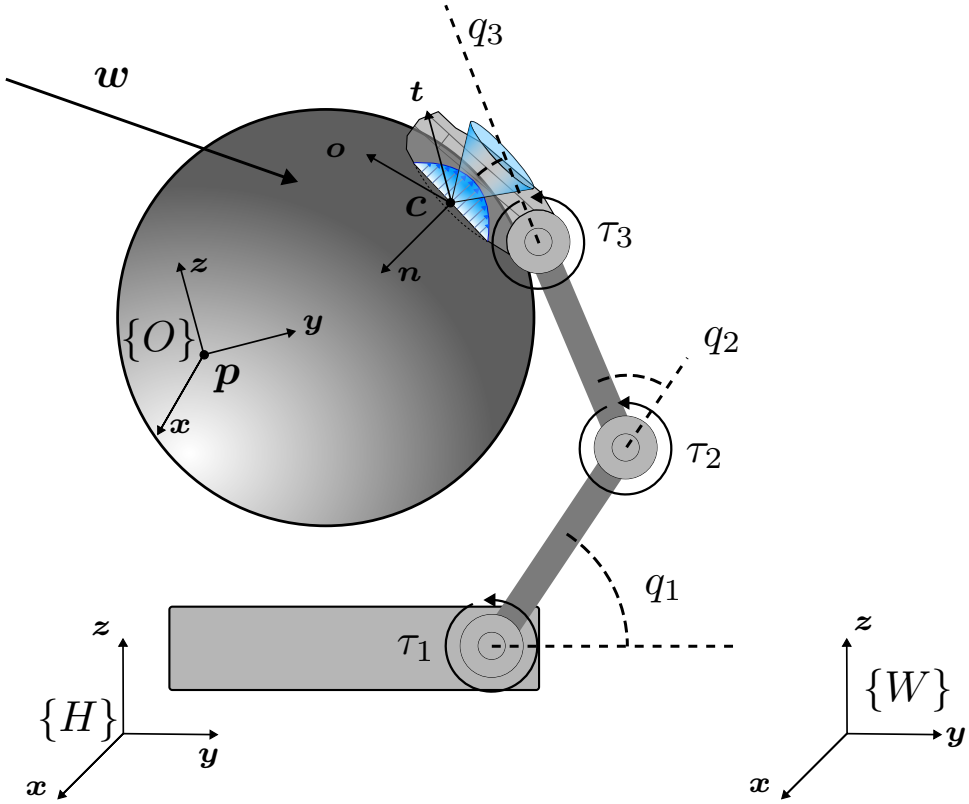

Fig. 2.4: The model of the world representation for this project.

While only a single finger here is illustrated the naming conventions and representations simply scale to all the EE's DOFs.

To model the interaction between the object and hand, grasp kinematics

The grasp matrix which relates the object's twist $\boldsymbol{\nu}$ to the twist of each contact point

Describe the grasp matrix and hand jacobian and how these can be used to transform from between frames both related to twist and wrench.

To determine which methods best describe the models presented above for this project, the SOTA will be presented in Chapter 3.

Chapter 3

State of the Art

3.1 Problem 1 - Tactile Perception

Based on the contact model categories described in Chapter 2, the most representative was chosen to be SF models. Within the category of SF models, a method fit for this project's use case is to be chosen to solve problem 1. SF models can furthermore be divided up into three different categories: analytical elasticity-based models (AEBM), elastic foundation models (EFM) and finite element models (FEM) [32].

AEBM are theoretical formulations of elastic contact areas and the stresses on both the surfaces and the sub-surfaces of the contacting bodies. The first of such models was introduced by Heinrich Rudolf Hertz in 1882 [33] and is still used for simple contact cases. In the formulation of the Hertzian contact model, two assumptions are made: Objects in contact are made of linear elastic materials and only small contact deformations occur compared to the dimension of an object. However, robotic EE fingertips are often made of non-linear elastic materials and for that reason, the Hertzian contact model does not represent the type of contact in this project [26, Chapter 37]. To improve on the Hertzian model, a more general formulation can be made which extends the model from linear to nonlinear elastic contacts [34, 35]. This power-law formulation subsumes the Hertzian contact theory while assuming a circular contact area. Other models have been purposed which combine the descriptions of both friction-contact and the shear-torsion as experienced by the bodies [36].

However, to more accurately describe the contacts involving robot fingers, viscoelastic soft contact model appear more relevant due to such fingers often being made of materials that show viscoelastic properties e.g., rubber, silicone and polymers. Simple models such as Kelvin-Voigt's [37] and Maxwell's [38] models describe the interaction between strain and stress as a spring-damper system in a serial or in a parallel configuration respectively. Models which expand on this idea describe the reacting force as the product of the temporal and the elastic response, while incorporating previous stress responses [39]. To simplify this formulation alternatives have been developed to assume no past stress [40, 41, 42]. Upon these, more modern techniques have been developed which have seen use in similar use cases as the ones of interest in this project. One method attempts to expand the description of contacts between rigid indentors and elastic half-spaces, using the Matrix Inversion Method (MIM) as introduced by Kalker [43], to viscoelastic half-spaces as well. Assuming the surfaces are frictionless, the relationship is described in terms of the pressure distribution, the resultant force on the indenter and the penetration [44]. Attempts involving solutions to Boussinesq's problem for polynomial pressures acting over polygonal domains [45] have also been developed and modernized by combining it with Cerruti's solution [46]. However due to numerical singularities being present, modifications are made to threshold the model. For a more complete description without singularities, Love's formulation has been added leading to a more accurate analytical representation but with the cost of an increased computational complexity [47]. For these Boussinesq-based approaches to be representative two assumptions are made 1) There exists a linear relationship between stress and strain, referred to as deformation, and 2) strains are infinitesimal [48, Chapter 6].

EFM are methods developed to build upon AEBM by allowing a simple discrete contact calculation in more general surface geometries. Here the deformable part of the contact is modeled as a layer over a rigid base with a series of discrete and independent springs in the contact normal. A widely used example of this method is Winkler's elastic foundation model [49], which has been used in structural engineering for modeling different properties of beams such as stability [50], vibrations and buckling [51]. Other EFM methods have shown accurate modeling

performance when applied within the field of medical engineering. Here a comparative study between AEBM, EFM and FEM demonstrate the suggested modified EFM performs better than the alternatives in 3D knee models when predicting prosthetic knee performance [32]. A different method attempts to attain vivo contact pressure predictions for improved knee replacement designs [52] Within the field of robotics EFM have provided solutions to problems such as slip [36], compliance, sliding [53, 28], stiffness and contact mechanics [54] of anthropomorphic grippers. One such method derives friction constraints based on general expressions for non-planar contacts of elastic bodies, where the local geometry and structure of the objects in contact are taken into account. Using these, a linear complementary problem is formulated and solved, resulting in the normal and frictional forces applied at each contact, as well as the relative velocity of the bodies involved [29].

FEM are popular general tools for solving PDE [55] and have seen contact applications in a wide range of engineering disciplines due to the assumptions made in AEBM and EFM not being applicable in these cases. A great number of these cases exist within the manufacturing industry [56] whereas one example is the metal forming processes. Specifically, the estimation of wheel-rail profiles [57] has been addressed using FEM due to the estimation of contacts over a greater surface is needed than what is assumed in AEBM and EFM. Other applications such as quality control through sliding wear estimation [58], analysis of the responses of fully coupled thermo-elasto-plastic solids in contact [59] and performing diagnostics of failures in induction motors [60]. Due to the complexity of modeling the contacts within robotics, FEM have become a popular choice and enabled tactile applications such as cobots tactile skin for ensuring collaborative behavior when in contact [61], performance estimation of new tactile sensor technologies [62] and evaluating complex contact types by extending simulations and analysis systems [63]. The modeling complexity has furthermore inspired using FEM as ground truth results when synthesizing machine learning (ML) data in simulations for deep learning models, which has enabled execution speeds 75 times greater than simply evaluating FEM [64, 65, 66].

The contact model chosen for this project is the AEBM Love's formulation due to its capabilities of representing contact surface displacements with great precision [47].

3.2 Problem 2 - Pose Estimation

Pose estimation (PE) is a common problem studied extensively in the literature. . . Two main category methods are identified: DL based approaches and point cloud registration-based approaches. . .

DL based approaches

3.3 Problem 3 - In-Hand Manipulation

Chapter 4

Tactile Perception

4.1 Introduction

Here we write the introduction for problem 1.

4.2 Related Work

Here we cite the related work by `\cite{source-label}` like this [**recent-progress-in-technologies-for-tactile-sensors**]

Chapter 5

Pose Estimation

5.1 Introduction

Here we write the introduction for problem 2.

5.2 Related Work

Here we cite the related work by `\cite{source-label}` like this [**recent-progress-in-technologies-for-tactile-sensors**]

Chapter 6

In-Hand Manipulation

6.1 Introduction

Here we write the introduction for problem 3.

6.2 Related Work

Here we cite the related work by `\cite{source-label}` like this [**recent-progress-in-technologies-for-tactile-sensors**]
For history see hand book of robotics chapter 38, the first section.

Chapter 7

System Integration

7.1 Introduction

Here we write the introduction for the system integration.

Chapter 8

Discussion

Chapter 9

Conclusion

Bibliography

[1] El Zaatari, Shirine et al. "Cobot programming for collaborative industrial tasks: An overview". In: *Robotics and Autonomous Systems* 116 (June 2019), pp. 162–180. DOI: 10.1016/j.robot.2019.03.003.

[2] *What is computer vision?* https://www.ibm.com/topics/computer-vision. Accessed: 2022-11-02.

[3] Zimmer, Henning. "Correspondence problems in computer vision". PhD thesis. Jan. 2012.

[4] LeCun, Yann, Bengio, Yoshua, and Hinton, Geoffrey. "Deep learning". In: *Nature* 521.7553 (May 2015), pp. 436–444. ISSN: 1476-4687. DOI: 10.1038/nature14539. URL: https://doi.org/10.1038/nature14539.

[5] Monkman, Gareth J. et al. "Robot Grippers". PhD thesis. Jan. 2004, pp. 5–6.

[6] Mihelj, Matjaž et al. "Robotics Second Edition". PhD thesis. Jan. 2019, p. 1.

[7] Szeliski, Richard. *Computer vision: algorithms and applications*. Springer Nature, 2022, p. 284.

[8] Publications, United Nations. "Inequality in Asia and the Pacific in the Era of the 2030 Agenda for Sustainable Development". In: 7May 2018. URL: https://www.unescap.org/publications/inequality-asia-and-pacific-era-2030-agenda-sustainable-development.

[9] Wenwen, Shi et al. "Analysis and Control of Human Error". In: *Procedia Engineering* 26 (Dec. 2011), pp. 2126–2132. DOI: 10.1016/j.proeng.2011.11.2415.

[10] Galin, Rinat et al. "Cobots and the benefits of their implementation in intelligent manufacturing". In: *IOP Conference Series: Materials Science and Engineering* 862 (May 2020), p. 032075. DOI: 10.1088/1757-899X/862/3/032075.

[11] Raptopoulos, Fredy, Koskinopoulou, Maria, and Maniadakis, Michail. "Robotic Pick-and-Toss Facilitates Urban Waste Sorting". In: *2020 IEEE 16th International Conference on Automation Science and Engineering (CASE)*. 2020, pp. 1149–1154. DOI: 10.1109/CASE48305.2020.9216746.

[12] Talpur, Mir Sajjad Hussain and Shaikh, Murtaza Hussain. *Automation of Mobile Pick and Place Robotic System for Small Food Industry*. 2012. DOI: 10.48550/ARXIV.1203.4475. URL: https://arxiv.org/abs/1203.4475.

[13] Yamanaka, Yuta et al. "Development of a Food Handling Soft Robot Hand Considering a High-speed Pick-and-place Task". In: *2020 IEEE/SICE International Symposium on System Integration (SII)*. 2020, pp. 87–92. DOI: 10.1109/SII46433.2020.9026282.

[14] Lee, Sukhan and Lee, Yeonho. "Real-Time Industrial Bin-Picking with a Hybrid Deep Learning-Engineering Approach". In: *2020 IEEE International Conference on Big Data and Smart Computing (BigComp)*. 2020, pp. 584–588. DOI: 10.1109/BigComp48618.2020.00015.

[15] Mnyusiwalla, Hussein et al. "A Bin-Picking Benchmark for Systematic Evaluation of Robotic Pick-and-Place Systems". In: *IEEE Robotics and Automation Letters* 5.2 (2020), pp. 1389–1396. DOI: 10.1109/LRA.2020.2965076.

[16] Wong, Ching-Chang et al. "Generic Development of Bin Pick-and-Place System Based on Robot Operating System". In: *IEEE Access* 10 (2022), pp. 65257–65270. DOI: 10.1109/ACCESS.2022.3182114.

[17] He, Zaixing et al. "6D Pose Estimation of Objects: Recent Technologies and Challenges". In: *Applied Sciences* 11.1 (2021). ISSN: 2076-3417. DOI: 10.3390/app11010228. URL: https://www.mdpi.com/2076-3417/11/1/228.

[18] ., Taryudi and Wang, Ming-Shyan. "3D object pose estimation using stereo vision for object manipulation system". In: May 2017, pp. 1532–1535. DOI: 10.1109/ICASI.2017.7988217.

[19] Oh, Jong-Kyu, Lee, Sukhan, and Lee, Chan-Ho. "Stereo vision based automation for a bin-picking solution". In: *International Journal of Control, Automation and Systems* 10.2 (Apr. 2012), pp. 362–373. ISSN: 2005-4092. DOI: 10.1007/s12555-012-0216-9. URL: https://doi.org/10.1007/s12555-012-0216-9.

[20] Abdelaal, Mahmoud et al. "Uncalibrated stereo vision with deep learning for 6-DOF pose estimation for a robot arm system". In: *Robotics and Autonomous Systems* 145 (2021), p. 103847. ISSN: 0921-8890. DOI: https://doi.org/10.1016/j.robot.2021.103847. URL: https://www.sciencedirect.com/science/article/pii/S0921889021001329.

[21] Nakano, Yoshihiro. "Stereo Vision Based Single-Shot 6D Object Pose Estimation for Bin-Picking by a Robot Manipulator". In: *CoRR* abs/2005.13759 (2020). arXiv: 2005.13759. URL: https://arxiv.org/abs/2005.13759.

[22] Kozák, Viktor et al. "Data-Driven Object Pose Estimation in a Practical Bin-Picking Application". In: *Sensors* 21.18 (2021). ISSN: 1424-8220. DOI: 10.3390/s21186093. URL: https://www.mdpi.com/1424-8220/21/18/6093.

[23] Xu, Chi et al. "6DoF Pose Estimation of Transparent Object from a Single RGB-D Image". In: *Sensors* 20.23 (2020). ISSN: 1424-8220. DOI: 10.3390/s20236790. URL: https://www.mdpi.com/1424-8220/20/23/6790.

[24] Straszheim, Troy et al. *Shadow Robot*. URL: https://www.shadowrobot.com/dexterous-hand-series/.

[25] Salisbury, J. Kenneth and Craig, John J. "Articulated Hands: Force Control and Kinematic Issues". In: *The International Journal of Robotics Research* 1.1 (1982), pp. 4–17. DOI: 10.1177/027836498200100102. eprint: https://doi.org/10.1177/027836498200100102. URL: https://doi.org/10.1177/027836498200100102.

[26] Bruno Siciliano, Oussama Khatib, ed. *Springer Handbook of Robotics*. Springer Berlin, Heidelberg, 2016.

[27] Jonker, Ben, Waiboer, Rob, and Aarts, Ronald. "Modelling of joint friction in robotic manipulators with gear transmissions". In: Jan. 2007, pp. 221–243. ISBN: 10-1-4020-5683-4.

[28] Howe, Robert D. and Cutkosky, Mark R. "Practical Force-Motion Models for Sliding Manipulation". In: *The International Journal of Robotics Research* 15.6 (1996), pp. 557–572. DOI: 10.1177/027836499601500603. eprint: https://doi.org/10.1177/027836499601500603. URL: https://doi.org/10.1177/027836499601500603.

[29] Ciocarlie, Matei, Lackner, Claire, and Allen, Peter. "Soft Finger Model with Adaptive Contact Geometry for Grasping and Manipulation Tasks". In: *Second Joint EuroHaptics Conference and Symposium on Haptic Interfaces for Virtual Environment and Teleoperator Systems (WHC'07)*. 2007, pp. 219–224. DOI: 10.1109/WHC.2007.103.

[30] Ghaednia, Hamed et al. "Contact Mechanics". In: Nov. 2013, pp. 93–140. ISBN: 978-1-4614-1944-0. DOI: 10.1007/978-1-4614-1945-7_3.

[31] Lynch, Kevin M and Park, Frank C. *Modern Robotics: Mechanics, Planning, and Control*. English (US). Cambridge Univeristy Press, 2017. ISBN: 978-1107156302.

[32] Pérez-González, Antonio et al. "A modified elastic foundation contact model for application in 3D models of the prosthetic knee". In: *Medical Engineering & Physics* 30.3 (2008), pp. 387–398. ISSN: 1350-4533. DOI: https://doi.org/10.1016/j.medengphy.2007.04.001. URL: https://www.sciencedirect.com/science/article/pii/S1350453307000616.

[33] Hertz, H. “On the Contact of Rigid Elastic Solids and on Hardness”. In: *Ch 6: Assorted Papers* (1882).

[34] Xydas, Nicholas and Kao, Imin. “Modeling of Contact Mechanics and Friction Limit Surfaces for Soft Fingers in Robotics, with Experimental Results”. In: *The International Journal of Robotics Research* 18.9 (1999), pp. 941–950. DOI: 10.1177/02783649922066673. eprint: https://doi.org/10.1177/02783649922066673. URL: https://doi.org/10.1177/02783649922066673.

[35] Yuvaraj, S., Malayalamurthi, R., and Raja, K. Venkatesh. “The haptic and perceptional characteristics of an anthropomorphic curved soft finger structure”. In: *Curved and Layered Structures* 6.1 (2019), pp. 161–168. DOI: doi:10.1515/cls-2019-0013. URL: https://doi.org/10.1515/cls-2019-0013.

[36] Howe, R.D., Kao, I., and Cutkosky, M.R. “The sliding of robot fingers under combined torsion and shear loading”. In: *Proceedings. 1988 IEEE International Conference on Robotics and Automation*. 1988, 103–105 vol.1. DOI: 10.1109/ROBOT.1988.12032.

[37] Flugge, Wilhelm. *Viscoelasticity*. Blaisdell Publishing Company, Waltham, MA, 1967.

[38] Maxwell, James Clerk. *On the dynamical theory of gases*. Royal Society, 1January 1867.

[39] Fung, Yuan-Cheng. “Mechanical properties and active remodeling of blood vessels”. In: *Biomechanics*. Springer, 1993.

[40] Tiezzi, Paolo and Kao, Imin. “Modeling of Viscoelastic Contacts and Evolution of Limit Surface for Robotic Contact Interface”. In: *Robotics, IEEE Transactions on* 23 (May 2007), pp. 206–217. DOI: 10.1109/TRO.2006.889494.

[41] Tiezzi, P. and Kao, I. “Characteristics of contact and limit surface for viscoelastic fingers”. In: *Proceedings 2006 IEEE International Conference on Robotics and Automation, 2006. ICRA 2006.* 2006, pp. 1365–1370. DOI: 10.1109/ROBOT.2006.1641899.

[42] Tiezzi, Paolo, Kao, Imin, and Vassura, G. “Effect of layer compliance on frictional behavior of soft robotic fingers”. In: *Advanced Robotics* 21 (Oct. 2007), pp. 1653–1670. DOI: 10.1163/156855307782227390.

[43] Kalker, J. J. “On the Contact Problem in Elastostatics”. In: *Unilateral Problems in Structural Analysis*. Ed. by Del Piero, Gianpietro and Maceri, Franco. Vienna: Springer Vienna, 1985, pp. 81–85. ISBN: 978-3-7091-2632-.

[44] Kozhevnikov, I.F. et al. “A new algorithm for computing the indentation of a rigid body of arbitrary shape on a viscoelastic half-space”. In: *International Journal of Mechanical Sciences* 50.7 (2008), pp. 1194–1202. ISSN: 0020-7403. DOI: https://doi.org/10.1016/j.ijmecsci.2008.04.003. URL: https://www.sciencedirect.com/science/article/pii/S0020740308000623.

[45] Marmo, Francesco and Rosati, Luciano. “A General Approach to the Solution of Boussinesq’s Problem for Polynomial Pressures Acting over Polygonal Domains”. In: *Journal of Elasticity* 122.1 (Jan. 2016), pp. 75–112. ISSN: 1573-2681. DOI: 10.1007/s10659-015-9534-5. URL: https://doi.org/10.1007/s10659-015-9534-5.

[46] Li, Junshan and Berger, Edward J. “A Boussinesq–Cerruti Solution Set for Constant and Linear Distribution of Normal and Tangential Load over a Triangular Area”. In: *Journal of elasticity and the physical science of solids* 63.2 (May 2001), pp. 137–151. ISSN: 1573-2681. DOI: 10.1023/A:1014013425423. URL: https://doi.org/10.1023/A:1014013425423.

[47] Wasko, Wojciech et al. “Contact Modelling and Tactile Data Processing for Robot Skins”. In: *Sensors* 19.4 (2019). ISSN: 1424-8220. DOI: 10.3390/s19040814. URL: https://www.mdpi.com/1424-8220/19/4/814.

[48] Slaughter, William S. *The Linearized Theory of Elasticity*. Springer, 2012.

[49] Hills, D., Nowell, D., and Barber, James. "KL Johnson and contact mechanics". In: *Proceedings of the Institution of Mechanical Engineers, Part C: Journal of Mechanical Engineering Science* 231 (Feb. 2016). DOI: 10.1177/0954406216634121.

[50] Lee, S.Y., Kuo, Y.H., and Lin, F.Y. "Stability of a Timoshenko beam resting on a Winkler elastic foundation". In: *Journal of Sound and Vibration* 153.2 (1992), pp. 193–202. ISSN: 0022-460X. DOI: https://doi.org/10.1016/S0022-460X(05)80001-X. URL: https://www.sciencedirect.com/science/article/pii/S0022460X0580001X.

[51] Eisenberger, M. and Clastornik, J. "Vibrations and buckling of a beam on a variable winkler elastic foundation". In: *Journal of Sound and Vibration* 115.2 (1987), pp. 233–241. ISSN: 0022-460X. DOI: https://doi.org/10.1016/0022-460X(87)90469-X. URL: https://www.sciencedirect.com/science/article/pii/0022460X8790469X.

[52] Fregly, Benjamin J., Bei, Yanhong, and Sylvester, Mark E. "Experimental evaluation of an elastic foundation model to predict contact pressures in knee replacements". In: *Journal of Biomechanics* 36.11 (2003), pp. 1659–1668. ISSN: 0021-9290. DOI: https://doi.org/10.1016/S0021-9290(03)00176-3. URL: https://www.sciencedirect.com/science/article/pii/S0021929003001763.

[53] Kao, Imin and Cutkosky, Mark R. "Quasistatic Manipulation with Compliance and Sliding". In: *The International Journal of Robotics Research* 11.1 (1992), pp. 20–40. DOI: 10.1177/027836499201100102. eprint: https://doi.org/10.1177/027836499201100102. URL: https://doi.org/10.1177/027836499201100102.

[54] Kao, Imin and Yang, Fuqian. "Stiffness and Contact Mechanics for Soft Fingers in Grasping and Manipulation". In: *Robotics and Automation, IEEE Transactions on* 20 (Mar. 2004), pp. 132–135. DOI: 10.1109/TRA.2003.820868.

[55] Sabat, Lovely and Kundu, Chinmay Kumar. "History of Finite Element Method: A Review". In: *Recent Developments in Sustainable Infrastructure*. Ed. by Das, Bibhuti Bhusan et al. Singapore: Springer Singapore, 2021, pp. 395–404. ISBN: 978-981-15-4577-1.

[56] Klocke, Fritz et al. "Examples of FEM application in manufacturing technology". In: *Journal of Materials Processing Technology* 120.1 (2002), pp. 450–457. ISSN: 0924-0136. DOI: https://doi.org/10.1016/S0924-0136(01)01210-9. URL: https://www.sciencedirect.com/science/article/pii/S0924013601012109.

[57] Telliskivi, T and Olofsson, U. "Contact mechanics analysis of measured wheel-rail profiles using the finite element method". In: *Proceedings of the Institution of Mechanical Engineers, Part F: Journal of Rail and Rapid Transit* 215.2 (2001), pp. 65–72. DOI: 10.1243/0954409011531404. eprint: https://doi.org/10.1243/0954409011531404. URL: https://doi.org/10.1243/0954409011531404.

[58] Põdra, Priit and Andersson, Sören. "Simulating sliding wear with finite element method". In: *Tribology International* 32.2 (1999), pp. 71–81. ISSN: 0301-679X. DOI: https://doi.org/10.1016/S0301-679X(99)00012-2. URL: https://www.sciencedirect.com/science/article/pii/S0301679X99000122.

[59] Pantuso, Daniel, Bathe, Klaus-Jürgen, and Bouzinov, Pavel A. "A finite element procedure for the analysis of thermo-mechanical solids in contact". In: *Computers & Structures* 75.6 (2000), pp. 551–573. ISSN: 0045-7949. DOI: https://doi.org/10.1016/S0045-7949(99)00212-6. URL: https://www.sciencedirect.com/science/article/pii/S0045794999002126.

[60] Liang, Xiaodong, Ali, Mohammad Zawad, and Zhang, Huaguang. "Induction Motors Fault Diagnosis Using Finite Element Method: A Review". In: *IEEE Transactions on Industry Applications* 56.2 (2020), pp. 1205–1217. DOI: 10.1109/TIA.2019.2958908.

[61] Ye, Zhiqiu et al. "Soft Robot Skin With Conformal Adaptability for On-Body Tactile Perception of Collaborative Robots". In: *IEEE Robotics and Automation Letters* (Mar. 2022), pp. 1–1. DOI: 10.1109/LRA.2022.3155225.

[62] Lu, Guan, Fu, Shiwen, and Xu, Yiming. "Design and Experimental Research of Robot Finger Sliding Tactile Sensor Based on FBG". In: *Sensors* 22.21 (2022). ISSN: 1424-8220. DOI: 10.3390/s22218390. URL: https://www.mdpi.com/1424-8220/22/21/8390.

[63] Ciocarlie, M., Miller, A., and Allen, P. "Grasp analysis using deformable fingers". In: *2005 IEEE/RSJ International Conference on Intelligent Robots and Systems*. 2005, pp. 4122–4128. DOI: 10.1109/IROS.2005.1545525.

[64] Narang, Yashraj S. et al. "Sim-to-Real for Robotic Tactile Sensing via Physics-Based Simulation and Learned Latent Projections". In: *CoRR* abs/2103.16747 (2021). arXiv: 2103.16747. URL: https://arxiv.org/abs/2103.16747.

[65] Narang, Yashraj S. et al. "Interpreting and Predicting Tactile Signals via a Physics-Based and Data-Driven Framework". In: *CoRR* abs/2006.03777 (2020). arXiv: 2006.03777. URL: https://arxiv.org/abs/2006.03777.

[66] Sferrazza, Carmelo et al. "Ground Truth Force Distribution for Learning-Based Tactile Sensing: A Finite Element Approach". In: *IEEE Access* PP (Nov. 2019), pp. 1–1. DOI: 10.1109/ACCESS.2019.2956882.

Appendix A

Appendix A Title