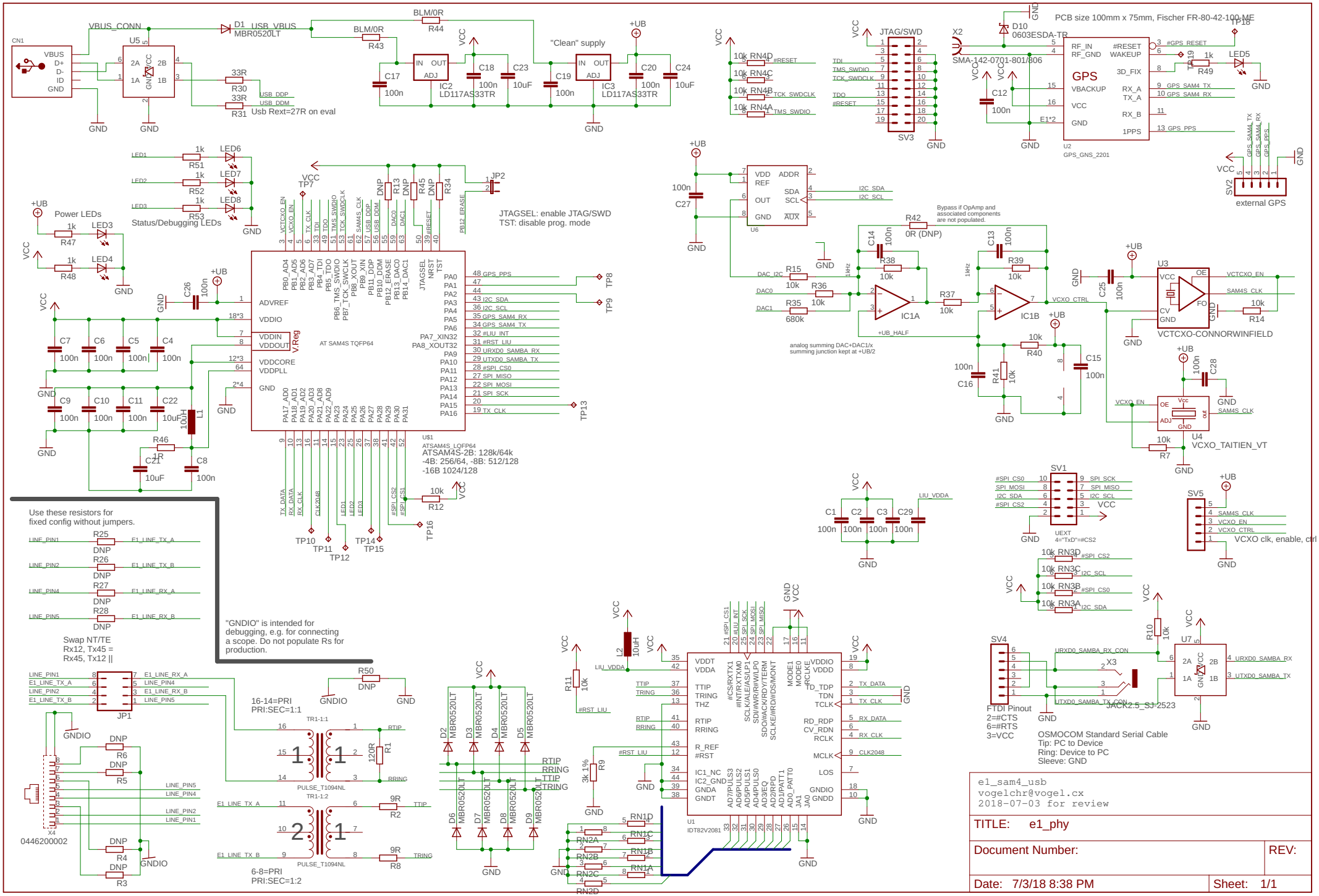
PCB size 100mm x 75mm, Fischer FR-80-42-100-MF
Usb Rext=27R on eval
"Clean" supply
LD117AS33TR
JTAG/SWD
SMA-142-0701-801/806
0603ESDA-TR
GPS
GPS_GNS_2201
external GPS
Power LEDs
Status/Debugging LEDs
JTAGSEL: enable JTAG/SWD
TST: disable prog. mode
AT SAM4S TQFP64
ATSAM4S-2B: 128k/64k
-4B: 256/64, -8B: 512/128
-16B 1024/128
VCTCXO-CONNORWINFIELD
VCXO_TAITIEN_VT
Bypass if OpAmp and associated components are not populated.
analog summing DAC+DAC1/x
summing junction kept at +UB/2
Use these resistors for fixed config without jumpers.
Swap NT/TE
Rx12, Tx45 =
Rx45, Tx12 ||
"GNDIO" is intended for debugging, e.g. for connecting a scope. Do not populate Rs for production.
16-14=PRI
PRI:SEC=1:1
6-8=PRI
PRI:SEC=1:2
PULSE_T1094NL
IDT82V2081
VCXO clk, enable, ctrl voltage
FTDI Pinout
2=#CTS
6=#RTS
3=VCC
OSMOCOM Standard Serial Cable
Tip: PC to Device
Ring: Device to PC
Sleeve: GND
JACK2.5_SJ-2523
0446200002
e1_sam4_usb
vogelchr@vogel.cx
2018-07-03 for review
TITLE: e1_phy
Document Number:
REV:
Date: 7/3/18 8:38 PM
Sheet: 1/1