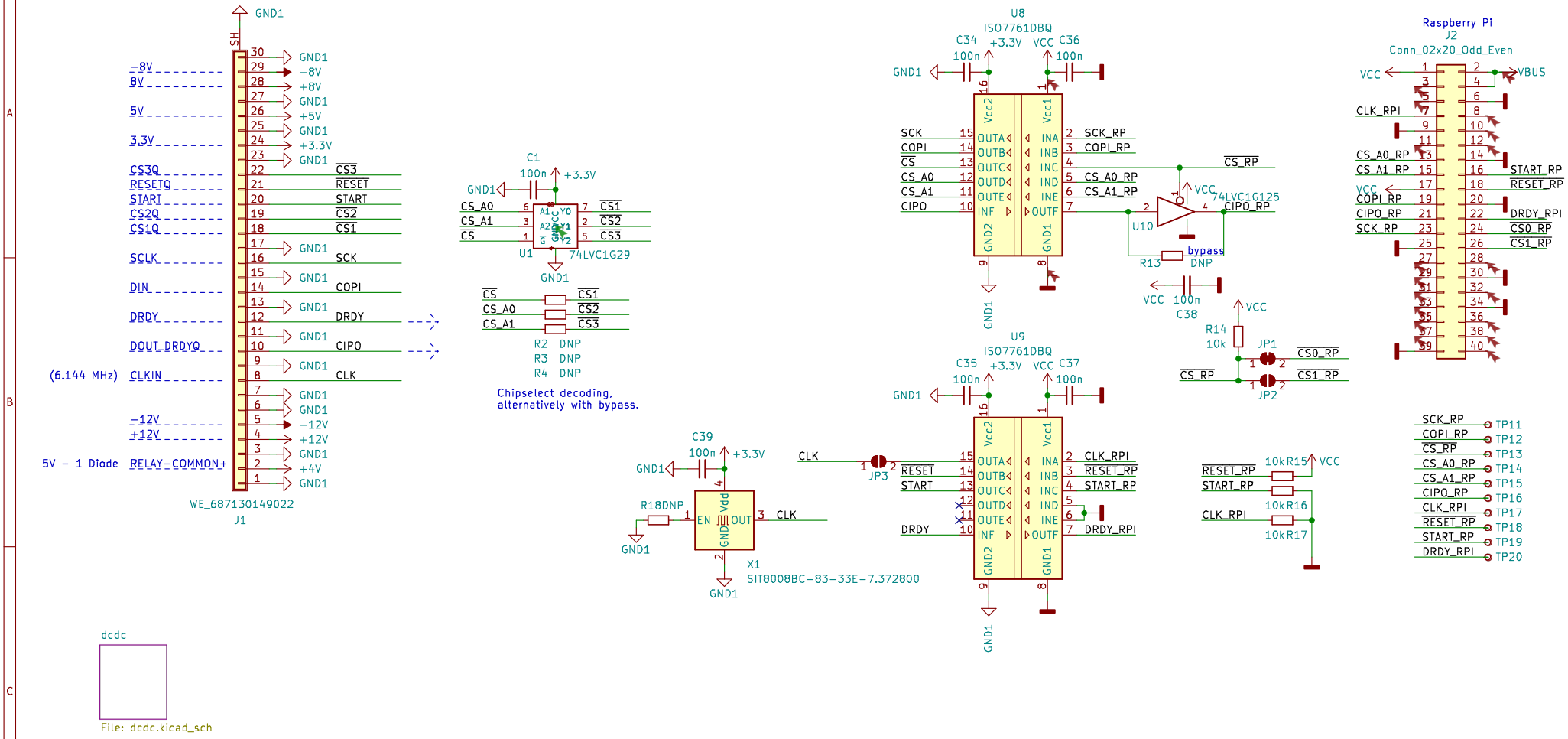

open source hardware

Sheet: /
File: emi-sombrero.kicad_sch

Title:

Size: A4	Date:	Rev:
KiCad E.D.A. kicad (5.99.0-13276-g0b59246279)		Id: 1/2

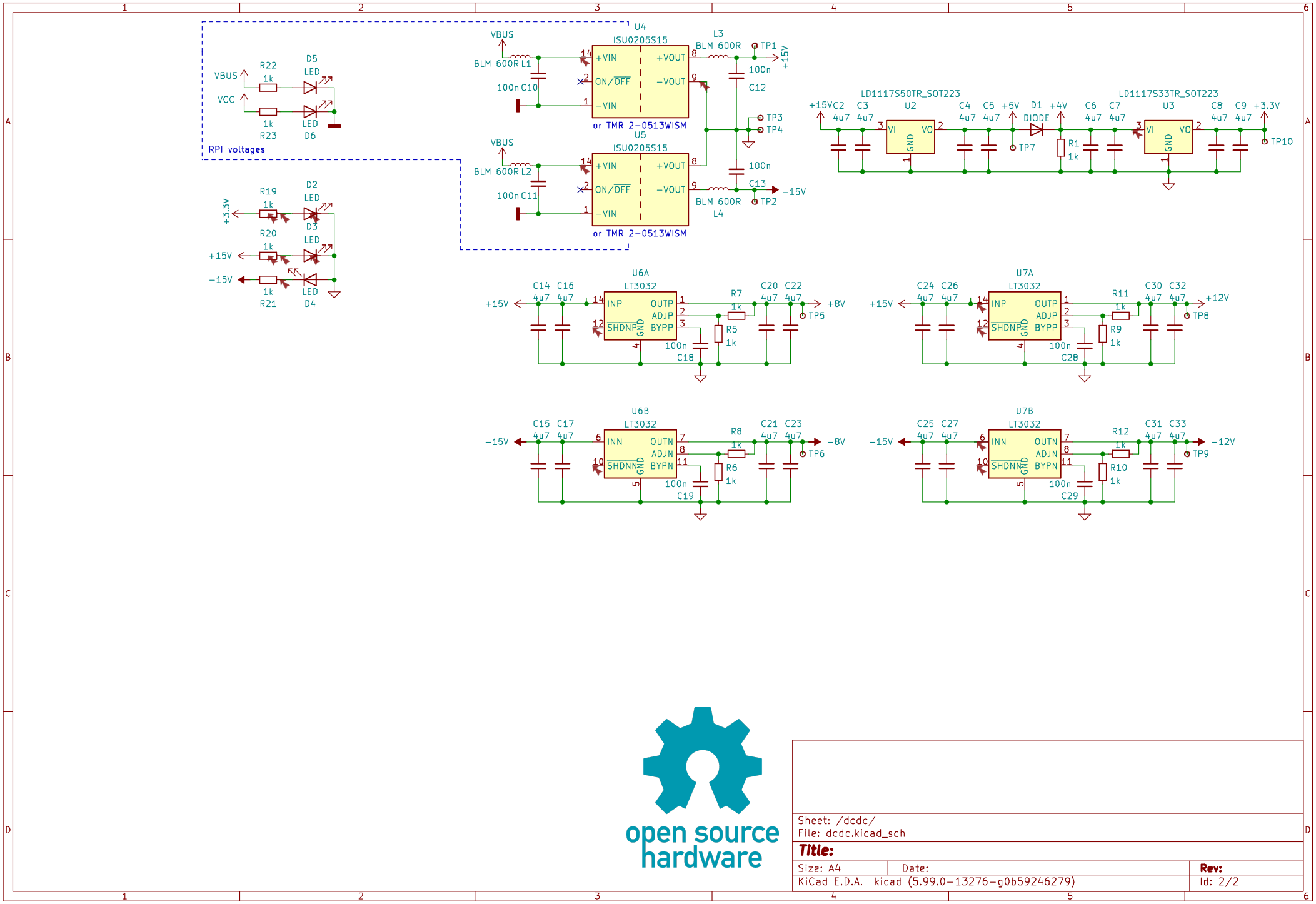
RPI voltages
VBUS
VCC
R22 1k
D5 LED
R23 1k
D6 LED
+3.3V
R19 1k
D2 LED
R20 1k
D3 LED
+15V
−15V
R21 1k
D4 LED
U4
ISU0205S15
+VIN
ON/OFF
−VIN
+VOUT
−VOUT
or TMR 2-0513WISM
U5
BLM 600R L1
BLM 600R L2
100n C10
100n C11
L3 BLM 600R
L4 BLM 600R
100n C12
100n C13
TP1
TP2
TP3
TP4
+15V
−15V
LD1117S50TR_SOT223
U2
LD1117S33TR_SOT223
U3
VI
VO
GND
C2 4u7
C3 4u7
C4 4u7
C5 4u7
+5V
D1 DIODE
+4V
R1 1k
C6 4u7
C7 4u7
C8 4u7
C9 4u7
+3.3V
TP7
TP10
U6A
LT3032
INP
OUTP
ADJP
BYPP
SHDNP
GND
C14 4u7
C16 4u7
R7 1k
R5 1k
C20 4u7
C22 4u7
+8V
TP5
100n C18
U7A
C24 4u7
C26 4u7
R11 1k
R9 1k
C30 4u7
C32 4u7
+12V
TP8
100n C28
U6B
INN
OUTN
ADJN
BYPN
SHDNN
C15 4u7
C17 4u7
R8 1k
R6 1k
C21 4u7
C23 4u7
−8V
TP6
100n C19
U7B
C25 4u7
C27 4u7
R12 1k
R10 1k
C31 4u7
C33 4u7
−12V
TP9
100n C29
open source hardware
Sheet: /dcdc/
File: dcdc.kicad_sch
Title:
Size: A4
Date:
Rev:
KiCad E.D.A. kicad (5.99.0-13276-g0b59246279)
Id: 2/2