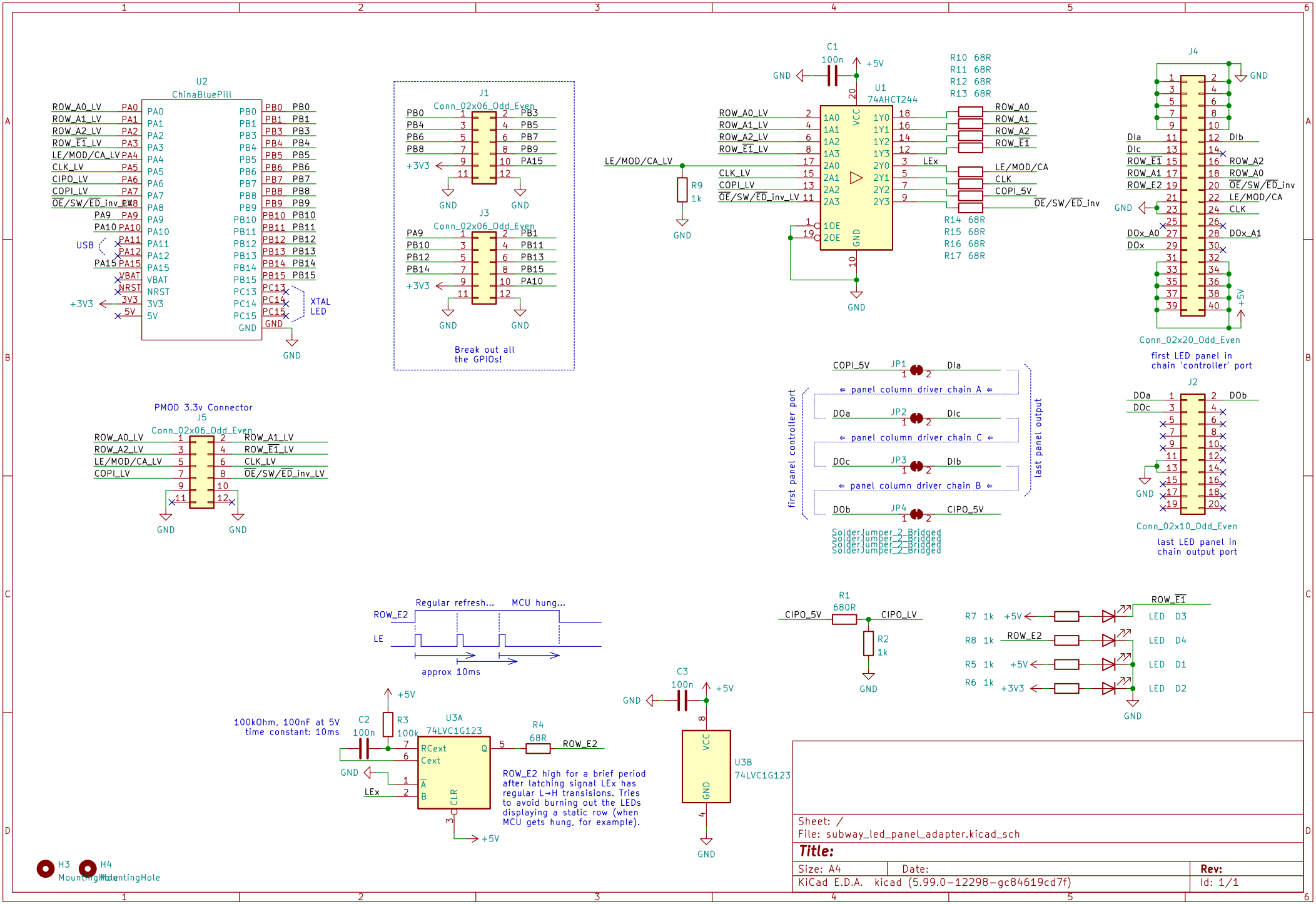
U2
ChinaBluePill
ROW_A0_LV PA0
ROW_A1_LV PA1
ROW_A2_LV PA2
ROW_E1_LV PA3
LE/MOD/CA_LV PA4
CLK_LV PA5
CIPO_LV PA6
COPI_LV PA7
OE/SW/ED_inv_LV PA8
PA9 PA9
PA10 PA10
USB PA11 PA12
PA15 PA15
VBAT
NRST
+3V3 3V3
5V
PB0 PB0
PB1 PB1
PB3 PB3
PB4 PB4
PB5 PB5
PB6 PB6
PB7 PB7
PB8 PB8
PB9 PB9
PB10 PB10
PB11 PB11
PB12 PB12
PB13 PB13
PB14 PB14
PB15 PB15
PC13
PC14
PC15
XTAL LED
GND
J1
Conn_02x06_Odd_Even
PB0 PB3
PB4 PB5
PB6 PB7
PB8 PA15
+3V3
J3
Conn_02x06_Odd_Even
PA9 PB1
PB10 PB11
PB12 PB13
PB14 PB15
+3V3 PA10
Break out all the GPIOs!
PMOD 3.3v Connector
J5
Conn_02x06_Odd_Even
ROW_A0_LV ROW_A1_LV
ROW_A2_LV ROW_E1_LV
LE/MOD/CA_LV CLK_LV
COPI_LV OE/SW/ED_inv_LV
C1
100n
+5V
U1
74AHCT244
VCC
GND
ROW_A0_LV
ROW_A1_LV
ROW_A2_LV
ROW_E1_LV
LE/MOD/CA_LV
CLK_LV
COPI_LV
OE/SW/ED_inv_LV
R9
1k
R10 68R
R11 68R
R12 68R
R13 68R
ROW_A0
ROW_A1
ROW_A2
ROW_E1
LEx
LE/MOD/CA
CLK
COPI_5V
OE/SW/ED_inv
R14 68R
R15 68R
R16 68R
R17 68R
J4
DIa DIb
DIc ROW_A2
ROW_E1 ROW_A0
ROW_A1 OE/SW/ED_inv
ROW_E2 LE/MOD/CA
CLK
DOx_A0 DOx_A1
DOx
+5V
Conn_02x20_Odd_Even
first LED panel in chain 'controller' port
COPI_5V JP1 DIa
⇐ panel column driver chain A ⇐
DOa JP2 DIc
⇐ panel column driver chain C ⇐
DOc JP3 DIb
⇐ panel column driver chain B ⇐
DOb JP4 CIPO_5V
first panel controller port
last panel output
SolderJumper_2_Bridged
SolderJumper_2_Bridged
SolderJumper_2_Bridged
SolderJumper_2_Bridged
J2
DOa DOb
DOc
Conn_02x10_Odd_Even
last LED panel in chain output port
Regular refresh...
MCU hung...
ROW_E2
LE
approx 10ms
100kOhm, 100nF at 5V
time constant: 10ms
C2
100n
R3
100k
U3A
74LVC1G123
RCext
Cext
Q
A
B
CLR
LEx
R4
68R
ROW_E2
ROW_E2 high for a brief period after latching signal LEx has regular L→H transisions. Tries to avoid burning out the LEDs displaying a static row (when MCU gets hung, for example).
C3
100n
U3B
74LVC1G123
R1
680R
CIPO_5V
CIPO_LV
R2
1k
R7 1k
R8 1k
R5 1k
R6 1k
ROW_E1
ROW_E2
LED D3
LED D4
LED D1
LED D2
H3 MountingHole
H4 MountingHole
Sheet: /
File: subway_led_panel_adapter.kicad_sch
Title:
Size: A4
Date:
Rev:
KiCad E.D.A. kicad (5.99.0-12298-gc84619cd7f)
Id: 1/1