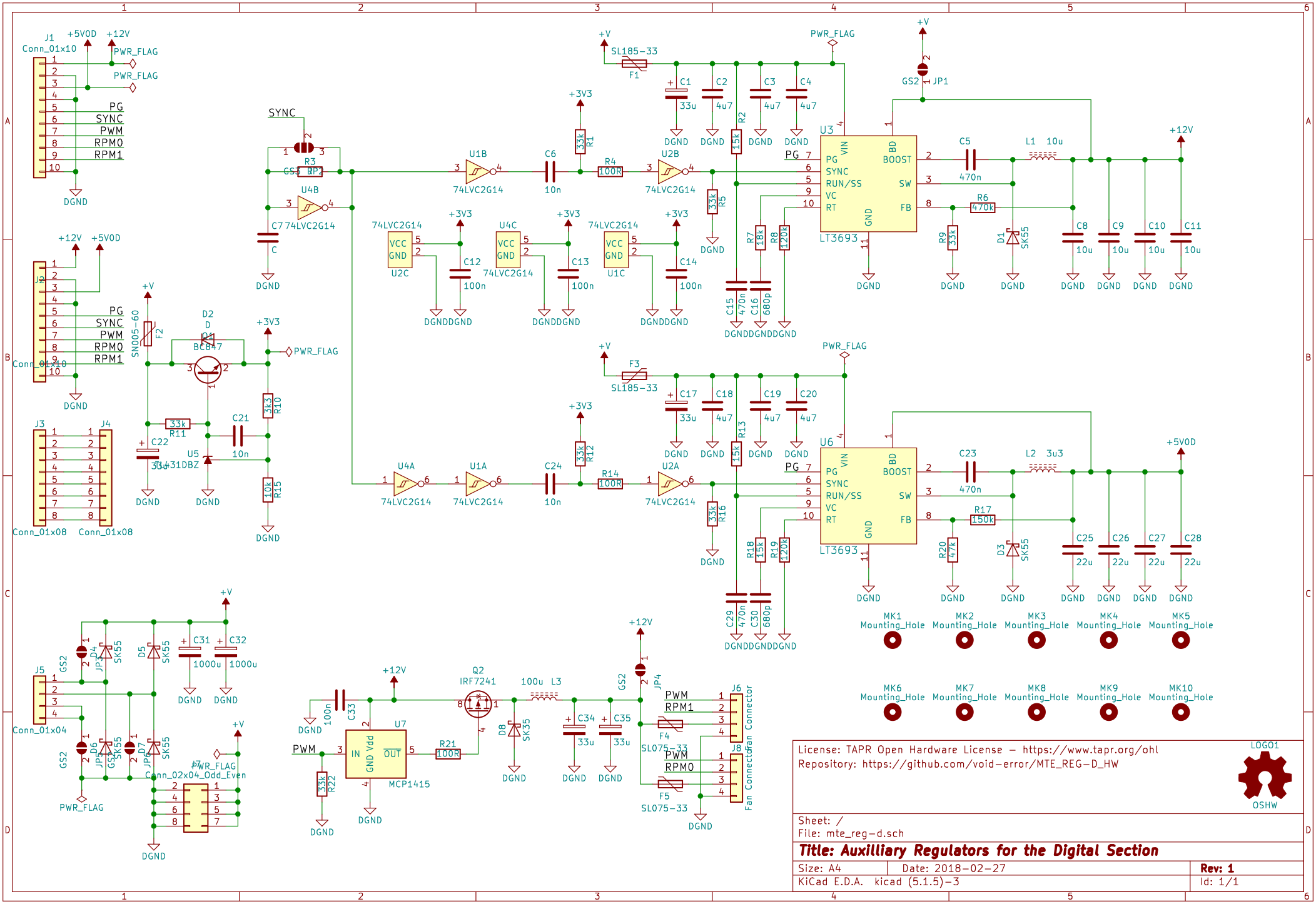
J1
Conn_01x10
+5V0D
+12V
PWR_FLAG
PG
SYNC
PWM
RPM0
RPM1
DGND
J2
Conn_01x10
J3
Conn_01x08
J4
Conn_01x08
SYNC
R3
GS3
JP2
C7
C
U1B
U2B
U4B
74LVC2G14
C6
10n
R1
33k
R4
100R
+3V3
U2C
U4C
U1C
VCC
GND
C12
C13
C14
100n
R5
33k
SL185-33
F1
F3
C1
C2
C3
C4
C17
C18
C19
C20
33u
4u7
R2
15k
R13
15k
U3
U6
LT3693
VIN
BD
BOOST
SW
FB
RT
RUN/SS
VC
C5
470n
L1
10u
L2
3u3
R6
470k
R17
150k
R7
18k
R8
120k
R9
33k
R18
15k
R19
120k
R20
47k
D1
SK55
D3
SK55
C8
C9
C10
C11
C23
C25
C26
C27
C28
22u
C15
470n
C16
680p
C29
470n
C30
680p
R14
100R
R12
33k
R16
33k
U4A
U1A
U2A
GS2
JP1
SN005-60
F2
D2
D
Q1
BC847
R11
33k
C21
10n
C22
33u
U5
431DBZ
R10
3k3
R15
10k
MK1
MK2
MK3
MK4
MK5
MK6
MK7
MK8
MK9
MK10
Mounting_Hole
J5
Conn_01x04
D4
D5
D6
D7
SK55
JP3
JP6
C31
C32
1000u
J7
Conn_02x04_Odd_Even
Q2
IRF7241
100u
L3
C33
100n
U7
MCP1415
IN
GND Vdd
OUT
R21
100R
R22
33k
D8
SK35
C34
C35
33u
JP4
F4
F5
SL075-33
J6
J8
Fan Connector
License: TAPR Open Hardware License – https://www.tapr.org/ohl
Repository: https://github.com/void-error/MTE_REG-D_HW
LOGO1
OSHW
Sheet: /
File: mte_reg-d.sch
Title: Auxilliary Regulators for the Digital Section
Size: A4
Date: 2018-02-27
Rev: 1
KiCad E.D.A. kicad (5.1.5)-3
Id: 1/1