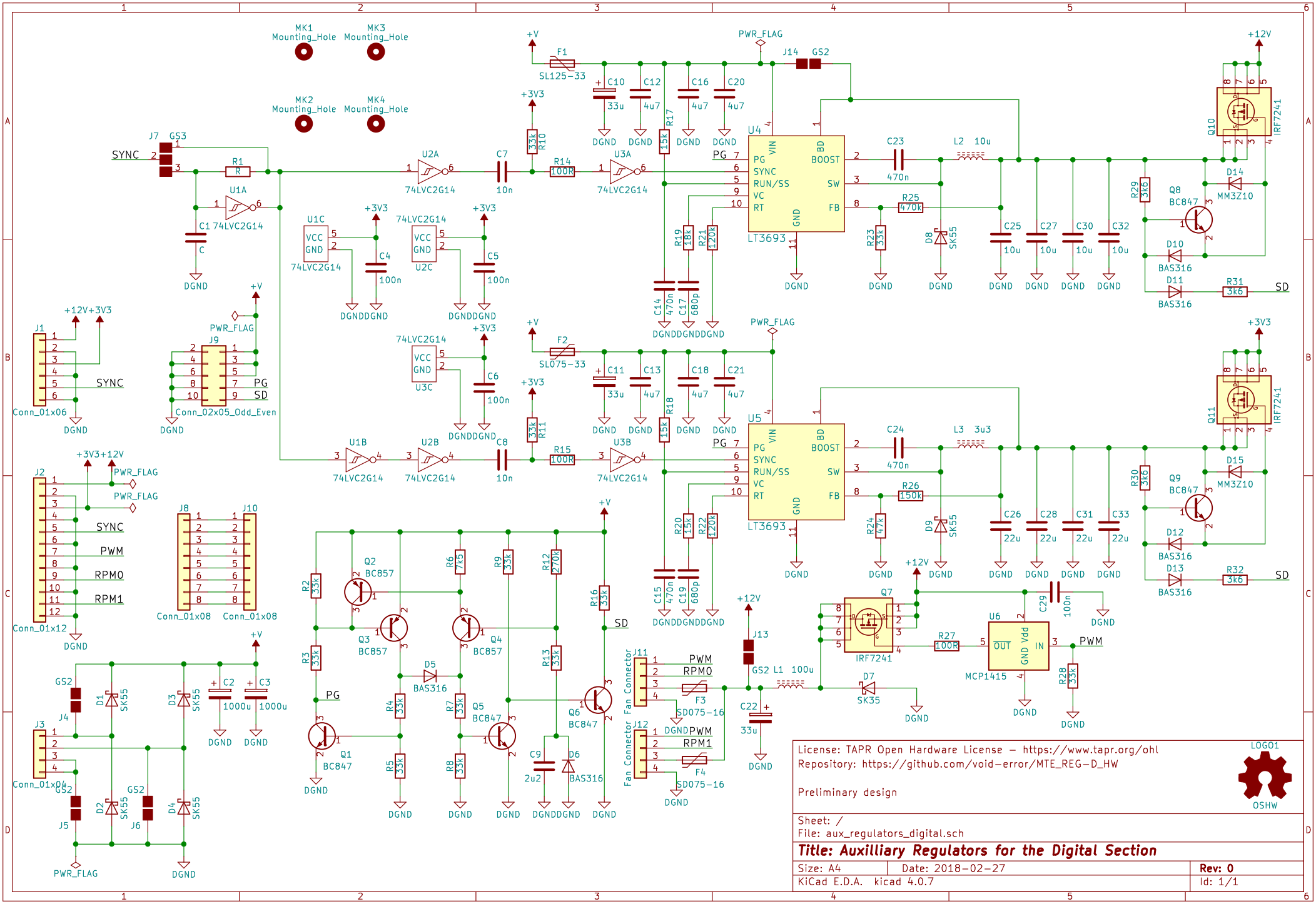
MK1 Mounting_Hole
MK2 Mounting_Hole
MK3 Mounting_Hole
MK4 Mounting_Hole
U4 LT3693
U5 LT3693
U6 MCP1415
Q10 IRF7241
Q11 IRF7241
Q7 IRF7241
Q8 BC847
Q9 BC847
Q1 BC857
Q2 BC857
Q3 BC857
Q4 BC857
Q5 BC847
Q6 BC847
U1A 74LVC2G14
U1B 74LVC2G14
U1C 74LVC2G14
U2A 74LVC2G14
U2B 74LVC2G14
U2C 74LVC2G14
U3A 74LVC2G14
U3B 74LVC2G14
U3C 74LVC2G14
J1 Conn_01x06
J2 Conn_01x12
J3 Conn_01x04
J9 Conn_02x05_Odd_Even
J8 Conn_01x08
J10 Conn_01x08
J11 Fan Connector
J12 Fan Connector
SYNC
PWM
RPM0
RPM1
PG
SD
+12V
+3V3
+V
PWR_FLAG
DGND
License: TAPR Open Hardware License – https://www.tapr.org/ohl
Repository: https://github.com/void-error/MTE_REG-D_HW
Preliminary design
OSHW
Sheet: /
File: aux_regulators_digital.sch
Title: Auxilliary Regulators for the Digital Section
Size: A4
Date: 2018-02-27
Rev: 0
KiCad E.D.A. kicad 4.0.7
Id: 1/1