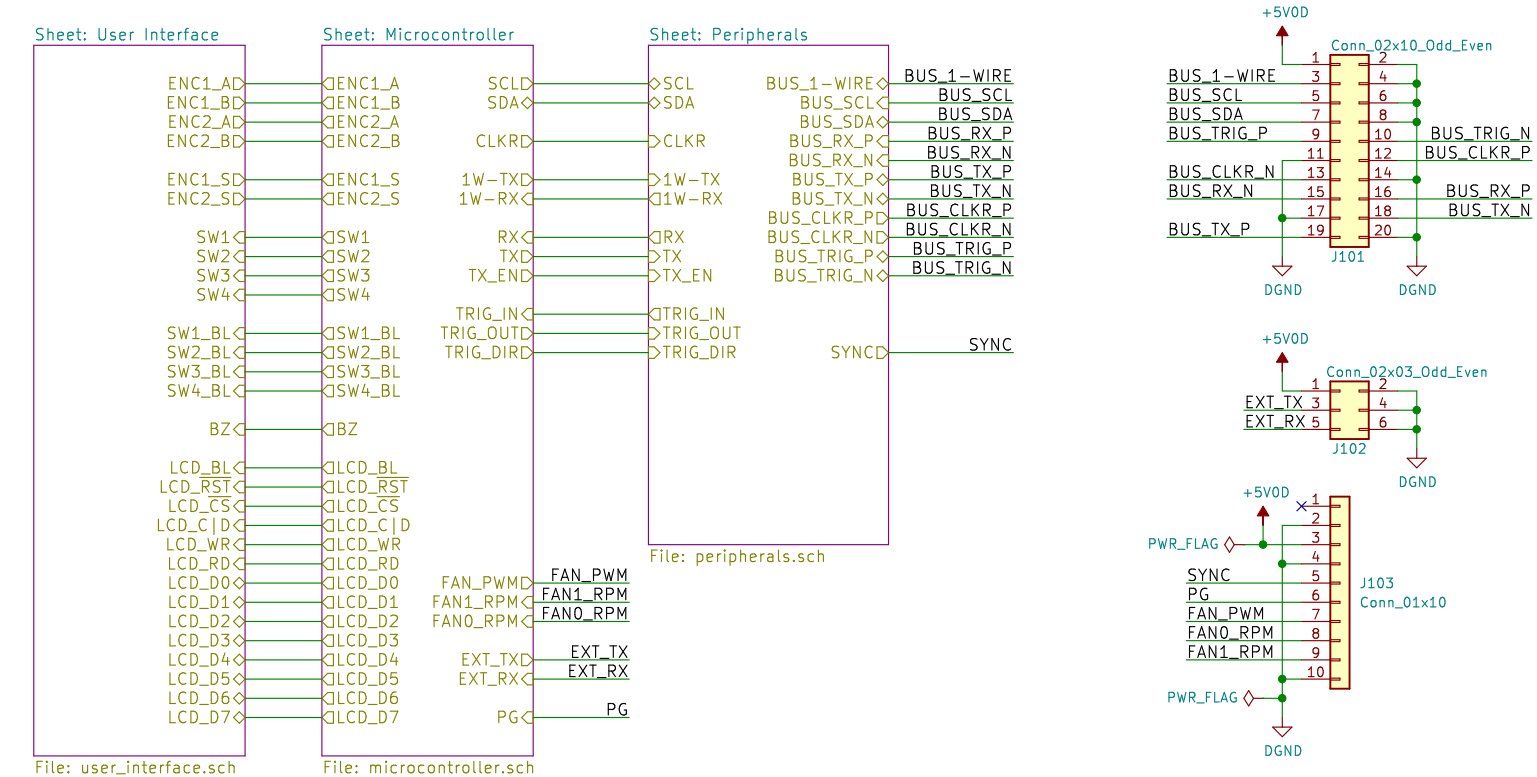

MK101 MountingHole
MK103 MountingHole
MK105 MountingHole
MK107 MountingHole
MK109 MountingHole
MK111 MountingHole

MK102 MountingHole
MK104 MountingHole
MK106 MountingHole
MK108 MountingHole
MK110 MountingHole
MK112 MountingHole

License: TAPR Open Hardware License – https://www.tapr.org/ohl
Repository: https://github.com/void-error/MTE_UI_HW

Sheet: /
File: mte_ui.sch

Title: MTE User Interface

Size: A4	Date: 2019-12-27	**Rev: 1**
KiCad E.D.A. kicad (5.1.5)-3		Id: 1/4

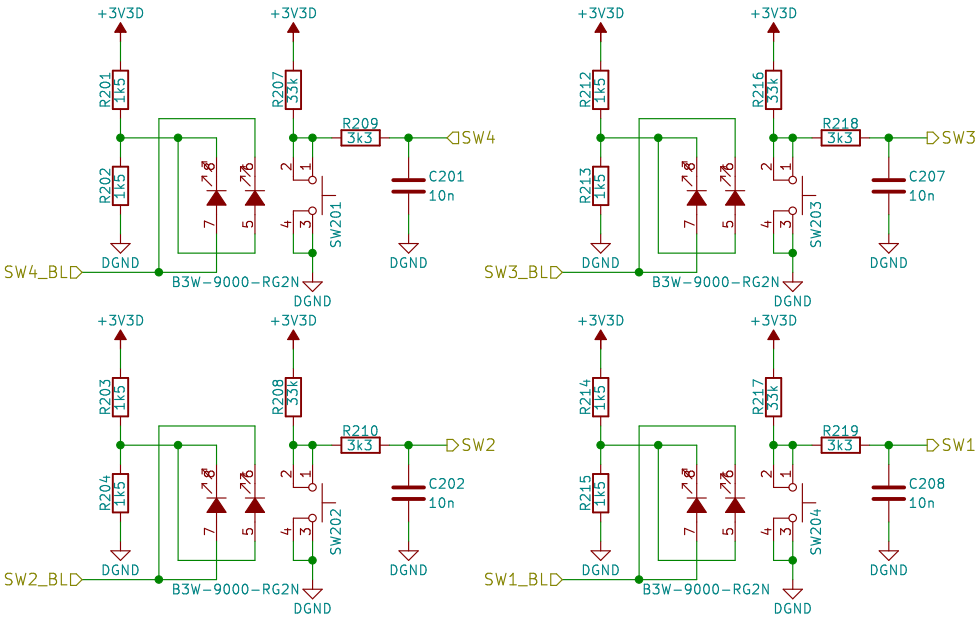

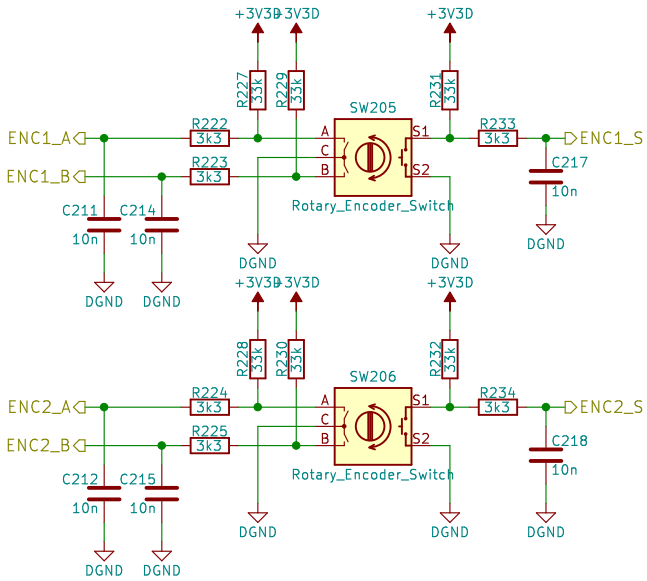

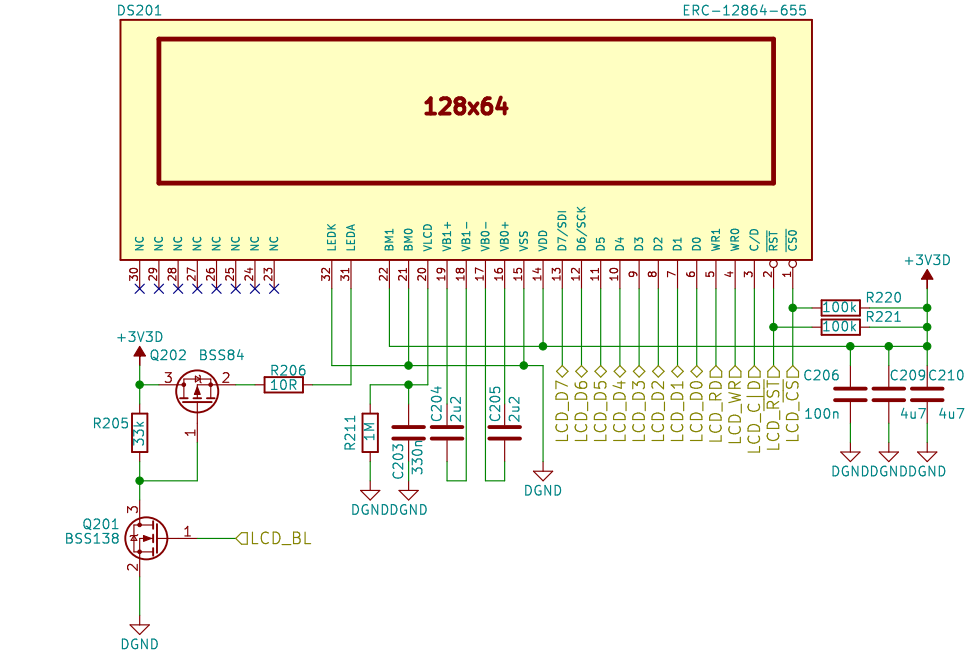

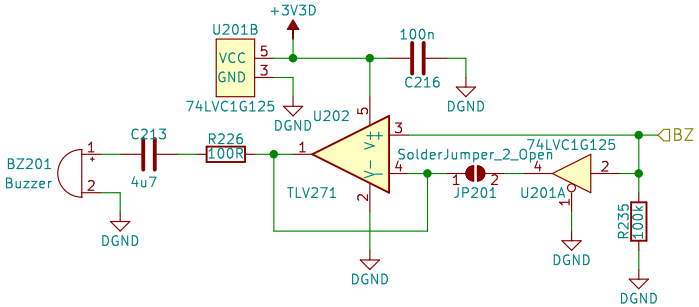

License: TAPR Open Hardware License – https://www.tapr.org/ohl
Repository: https://github.com/void-error/MTE_UI_HW

Preliminary design

Sheet: /User Interface/
File: user_interface.sch

Title: MTE User Interface

Size: A4	Date: 2019-12-27	**Rev: 1**
KiCad E.D.A. kicad (5.1.5)-3		Id: 2/4

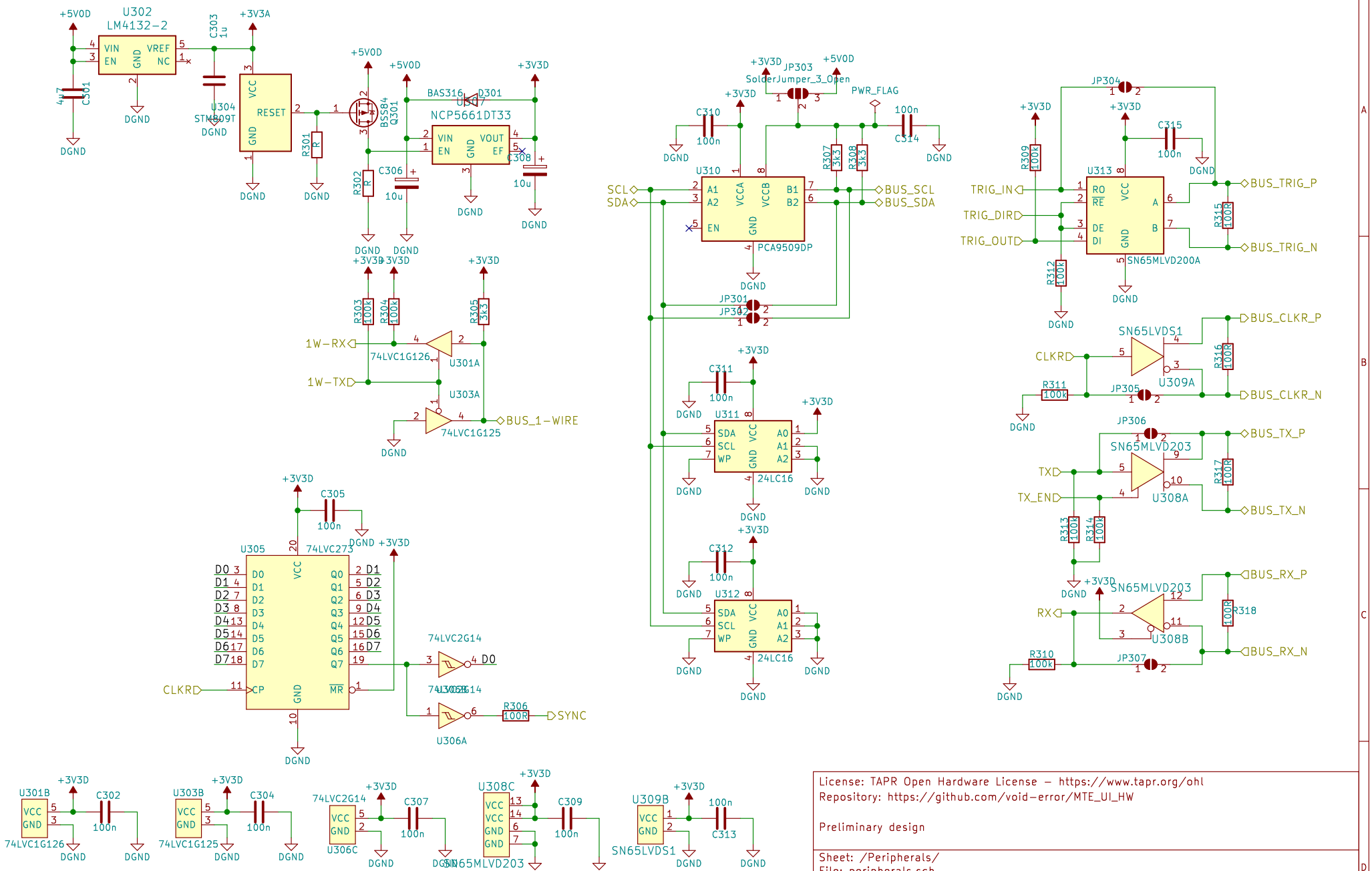

License: TAPR Open Hardware License – https://www.tapr.org/ohl
Repository: https://github.com/void-error/MTE_UI_HW

Preliminary design

Sheet: /Peripherals/
File: peripherals.sch

Title: MTE User Interface

Size: A4	Date: 2019-12-27	**Rev: 1**
KiCad E.D.A. kicad (5.1.5)-3		Id: 3/4

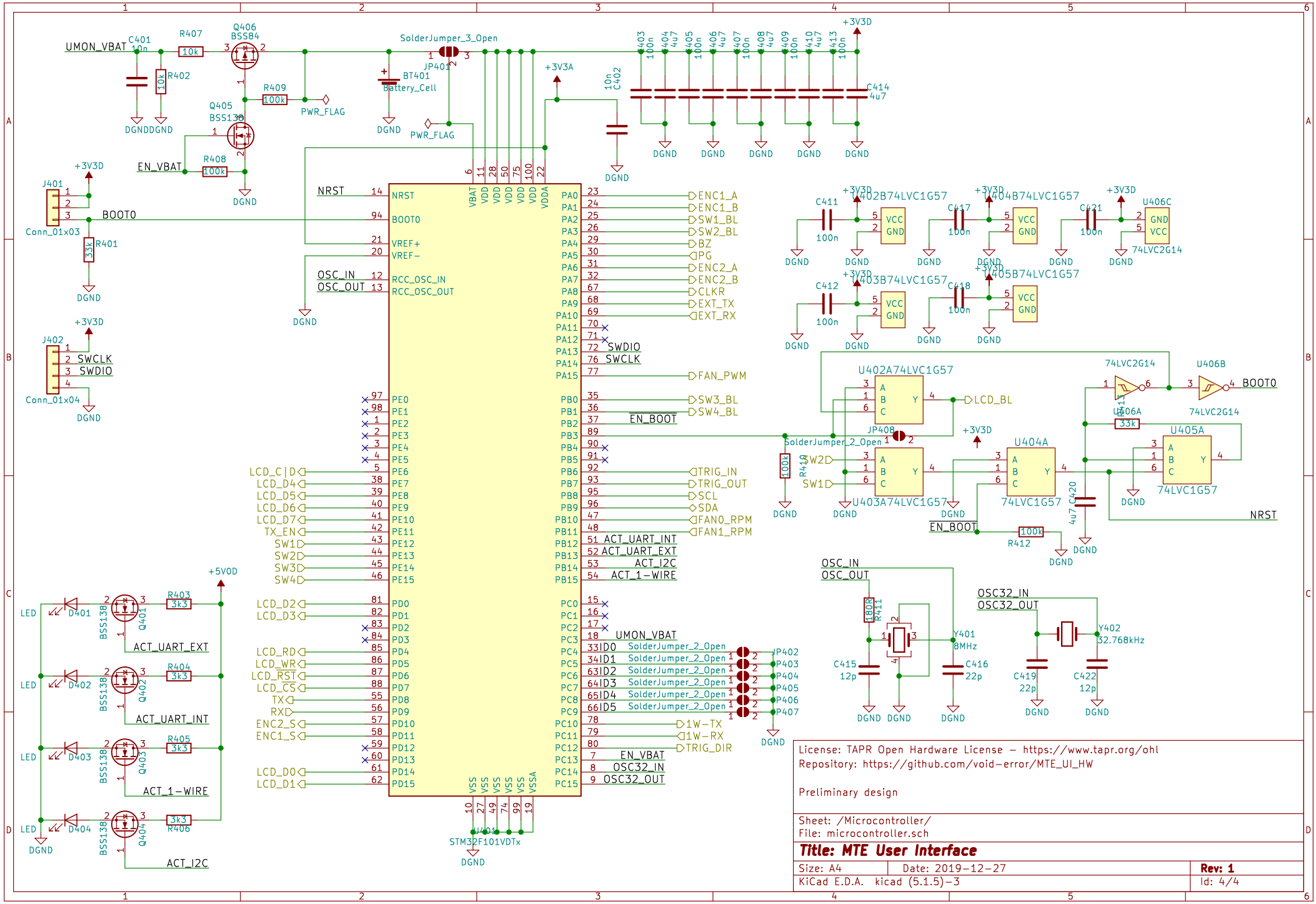

License: TAPR Open Hardware License – https://www.tapr.org/ohl
Repository: https://github.com/void-error/MTE_UI_HW

Preliminary design

Sheet: /Microcontroller/
File: microcontroller.sch

Title: MTE User Interface

Size: A4	Date: 2019-12-27	**Rev: 1**
KiCad E.D.A. kicad (5.1.5)-3		Id: 4/4