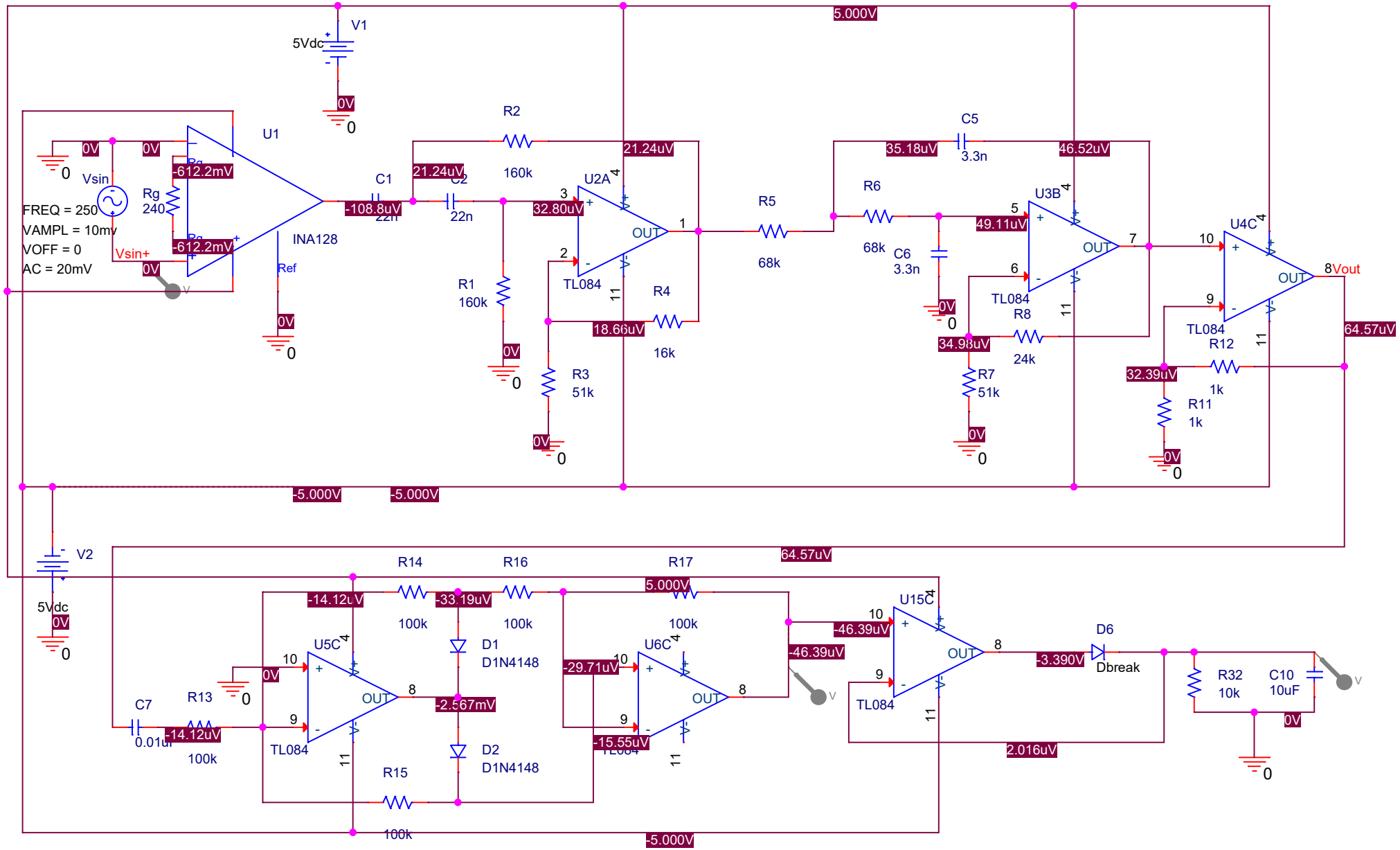

Title	Senior design project	Alexander Volkov
Size A	Document Number EMG signal acquisition	Rev 1b
Date: Friday, November 22, 2019	Sheet 1 of 1	