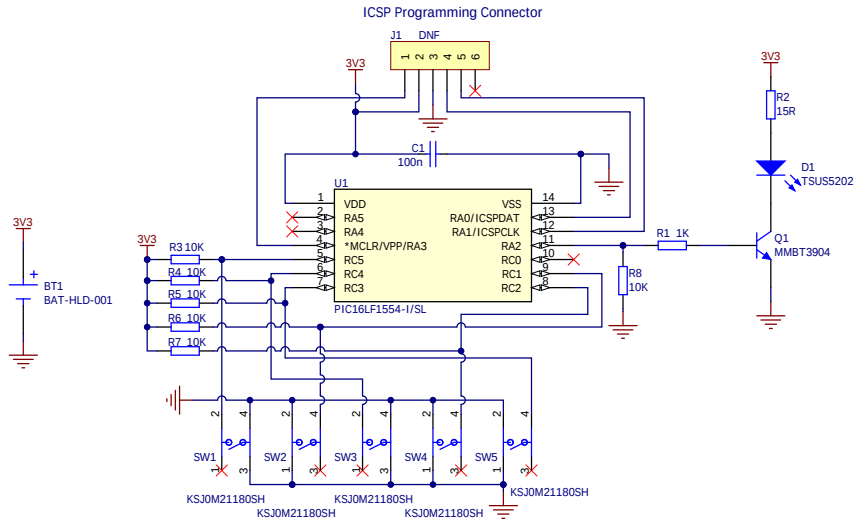

IR: RC5 System Code 16
Functions:
Volume + (SW4 - RC2): 16
Volume - (SW2 - RC1): 17
Mute (SW5 - RC3): 13
Input select + (SW1 - RC5) : 32
Input select - (SW3 - RC4): 33

DoDECA

© DODECA s.r.l.s
Via Cagliari 16/A, 95127 Catania, Italy.
tech@dodeca-audio.com

Project: DRC1

Description: DRC1 CIRCUIT DIAGRAM

Size	FCSM No.	DWG No.	Rev
A3		PC0004AA/01	1.0

Scale	Drawn by	Sheet	Date
	Santo Prattico'	1 of 1	1st April 2021

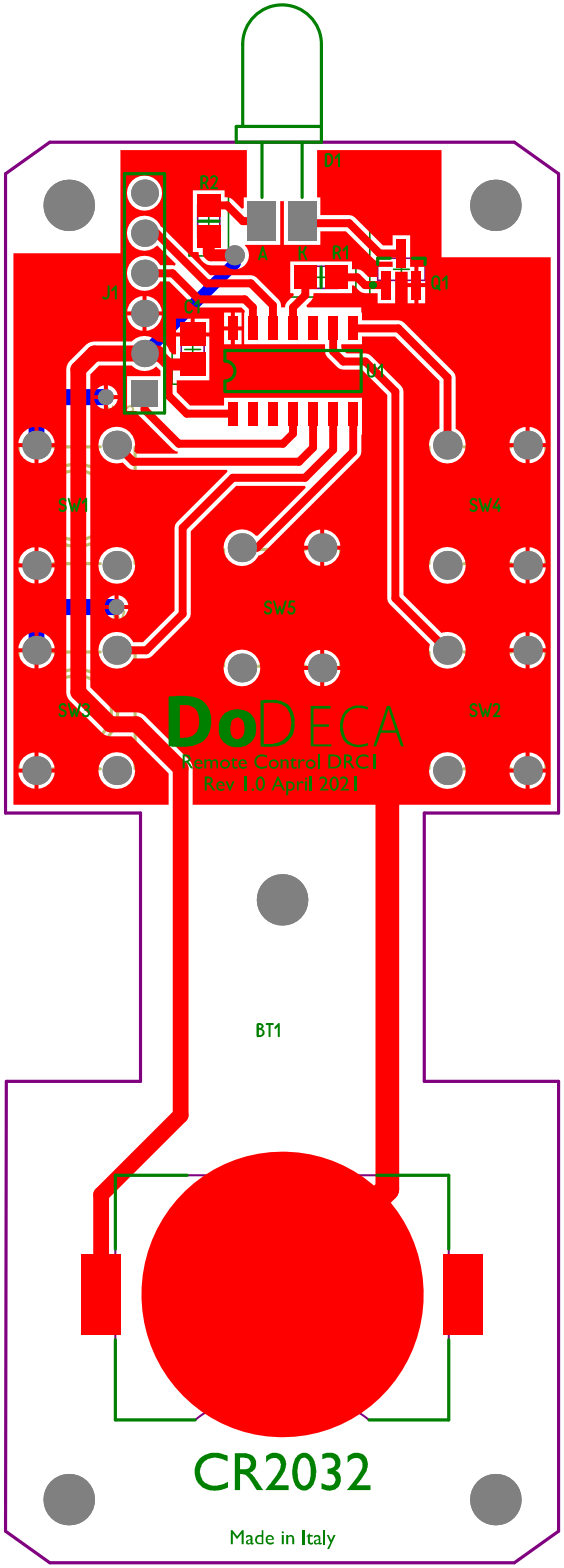
D1
R2
A
K
R1
Q1
J1
U1
SW1
SW4
SW5
SW3
SW2
DoDECA
Remote Control DRC1
Rev 1.0 April 2021
BT1
CR2032
Made in Italy