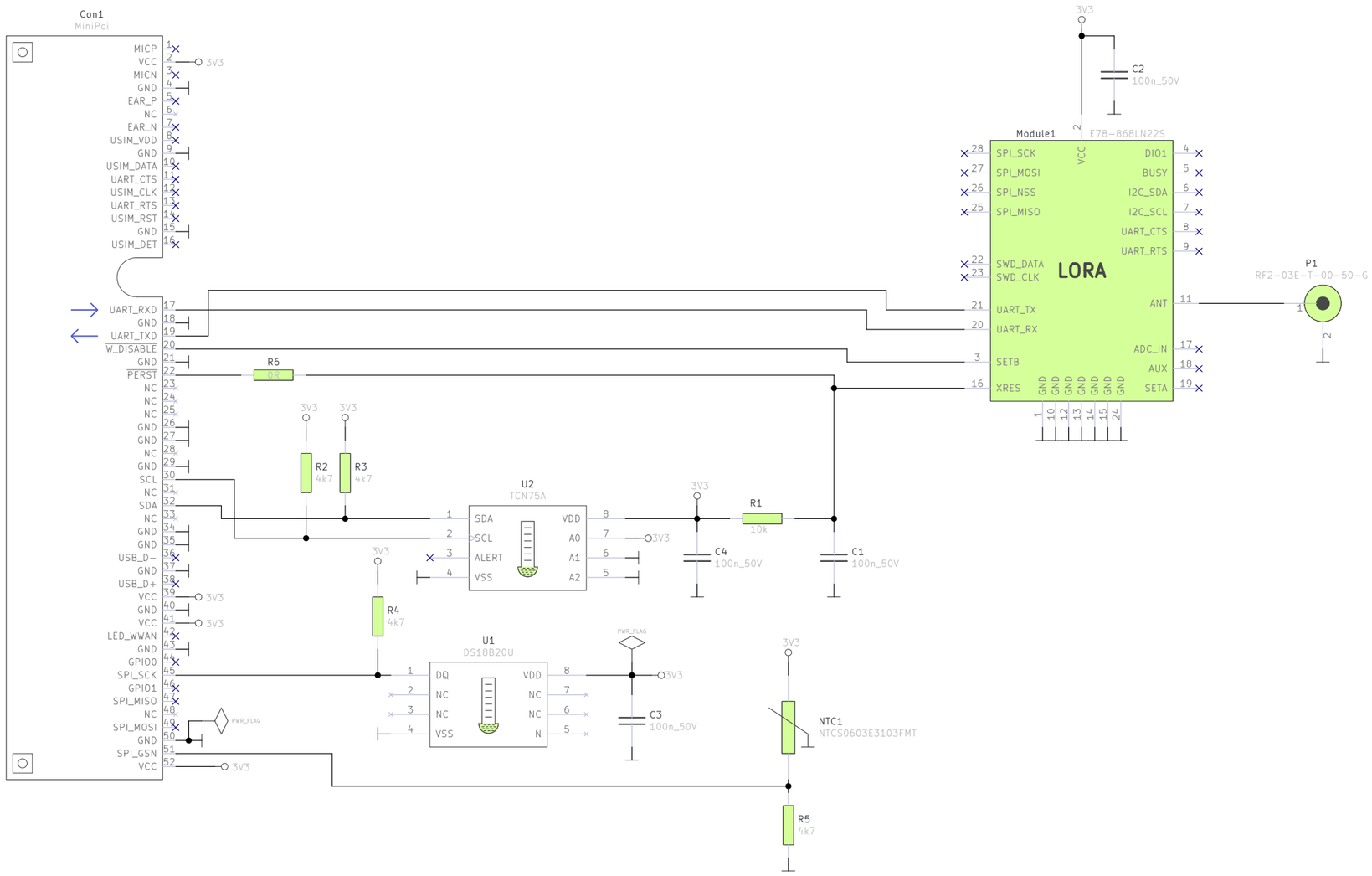

Embedded System Labs

Sheet: /

File: lorawan_e78-868ln22s_minipci.kicad_sch

Title: Lorawan Node based on E78-868LN22S

Size: A3	Date: 2021-01-10	**Rev: V1.0**
KiCad E.D.A. kicad (5.99.0-9801-g46d71f0d23)		Id: 1/1