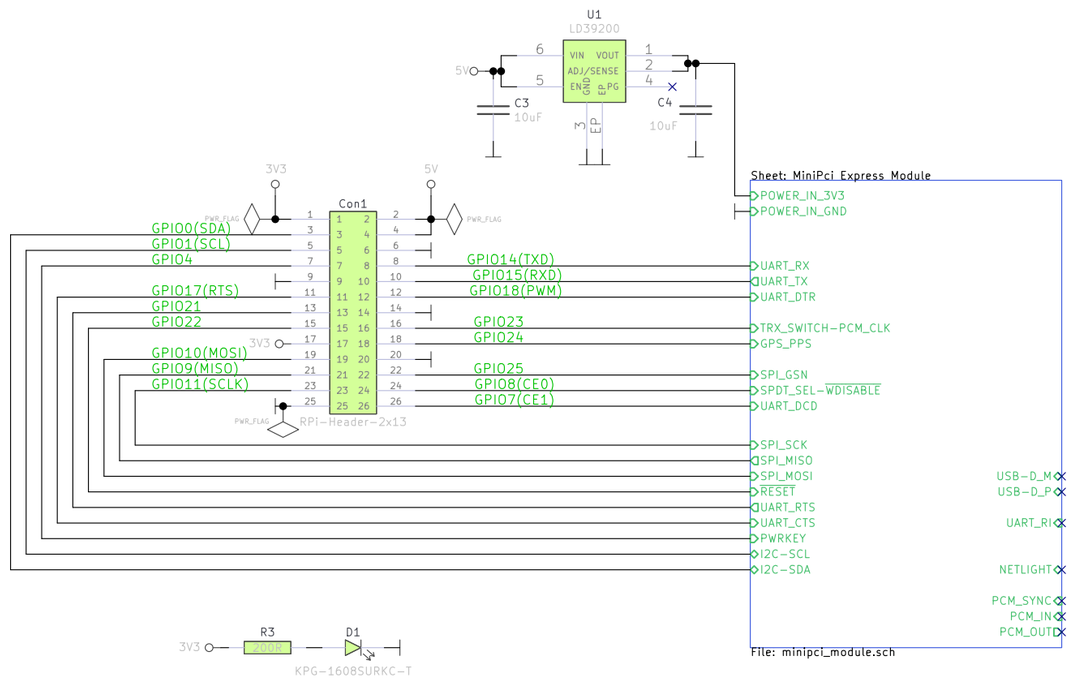

Embedded System Labs

Sheet: /

File: pi-hat-lorawan-gateway-minipci.sch

Title: Pi Hat with mini pci express connector for lorawan gateway rk833

Size: A3	Date: 2021-01-21	**Rev: V1.0**
KiCad E.D.A. kicad 5.1.9-73d0e3b20d88ubuntu20.04.1		Id: 1/2

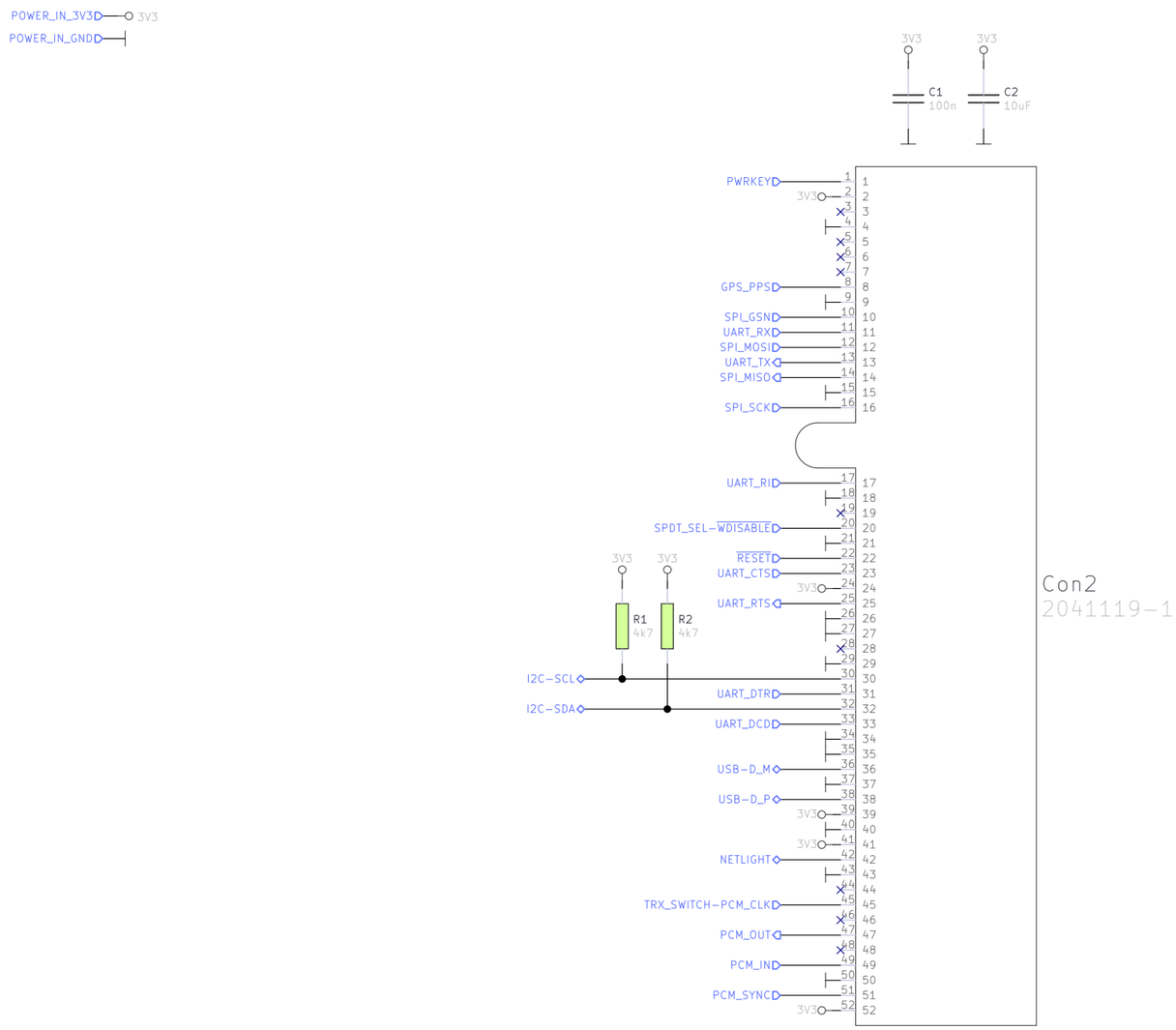

Embedded System Labs

Sheet: /MiniPci Express Module/
File: minipci_module.sch

Title: Minipci Module

Size: A3	Date: 2021-01-10	**Rev: V1.0**
KiCad E.D.A. kicad 5.1.9-73d0e3b20d88ubuntu20.04.1		Id: 2/2