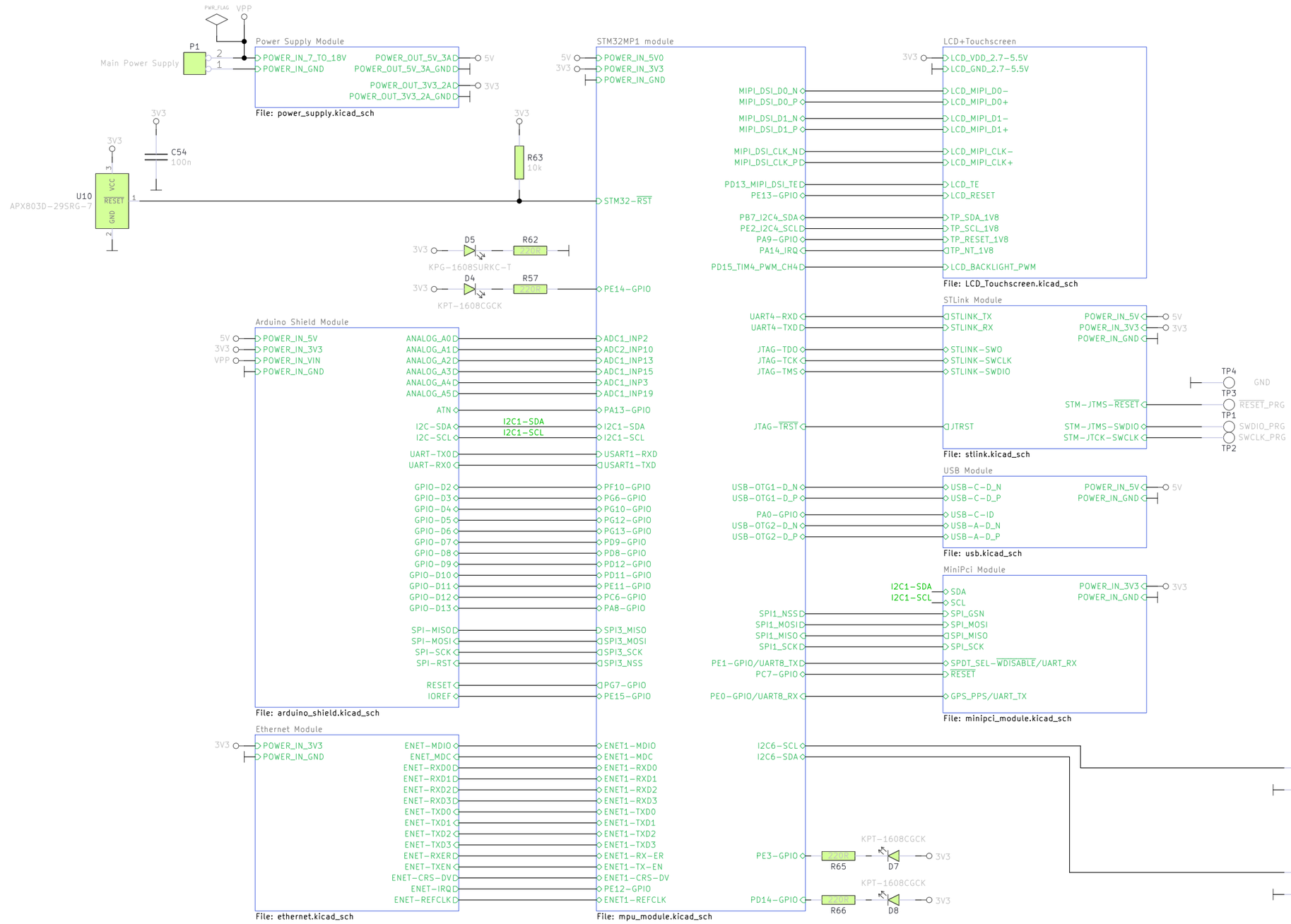

Embedded System Labs

Sheet: /

File: stm32mp1-custom-devboard.kicad_sch

Title: stm32mp1-custom-devboard

Size: A3	Date: 2020-12-19	**Rev: V1.0**
KiCad E.D.A. kicad (5.99.0-9713-g2bc22de1a5)		Id: 1/11

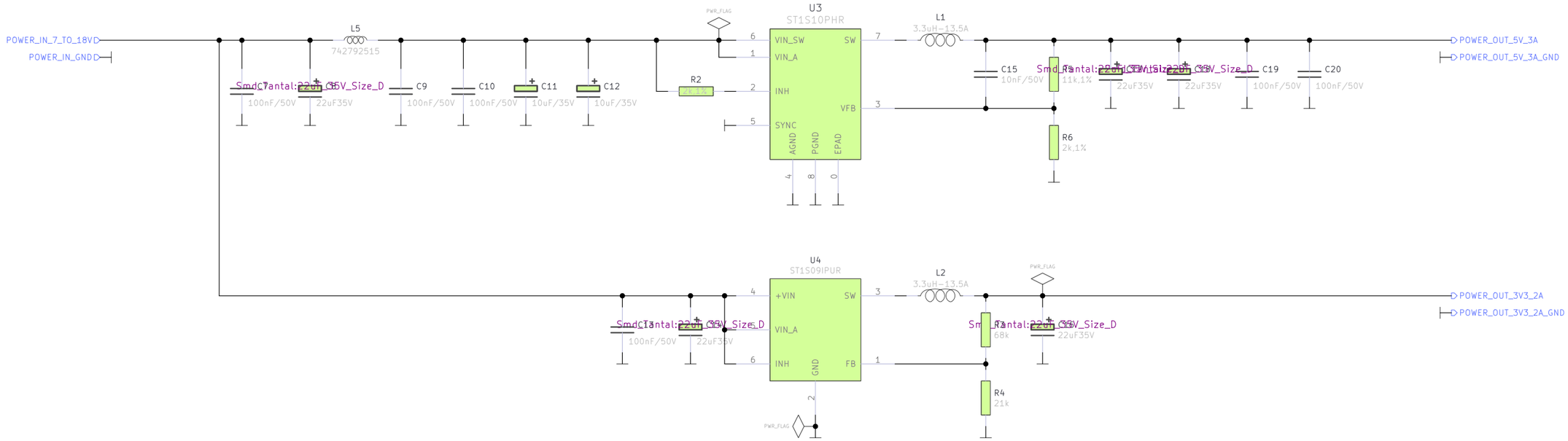

Embedded System Labs

Sheet: /Power Supply Module/
File: power_supply.kicad_sch

Title: Power Supply Module 5V/3V3

Size: A3	Date: 2020-12-19	**Rev: V1.0**
KiCad E.D.A. kicad (5.99.0-9713-g2bc22de1a5)		Id: 2/11

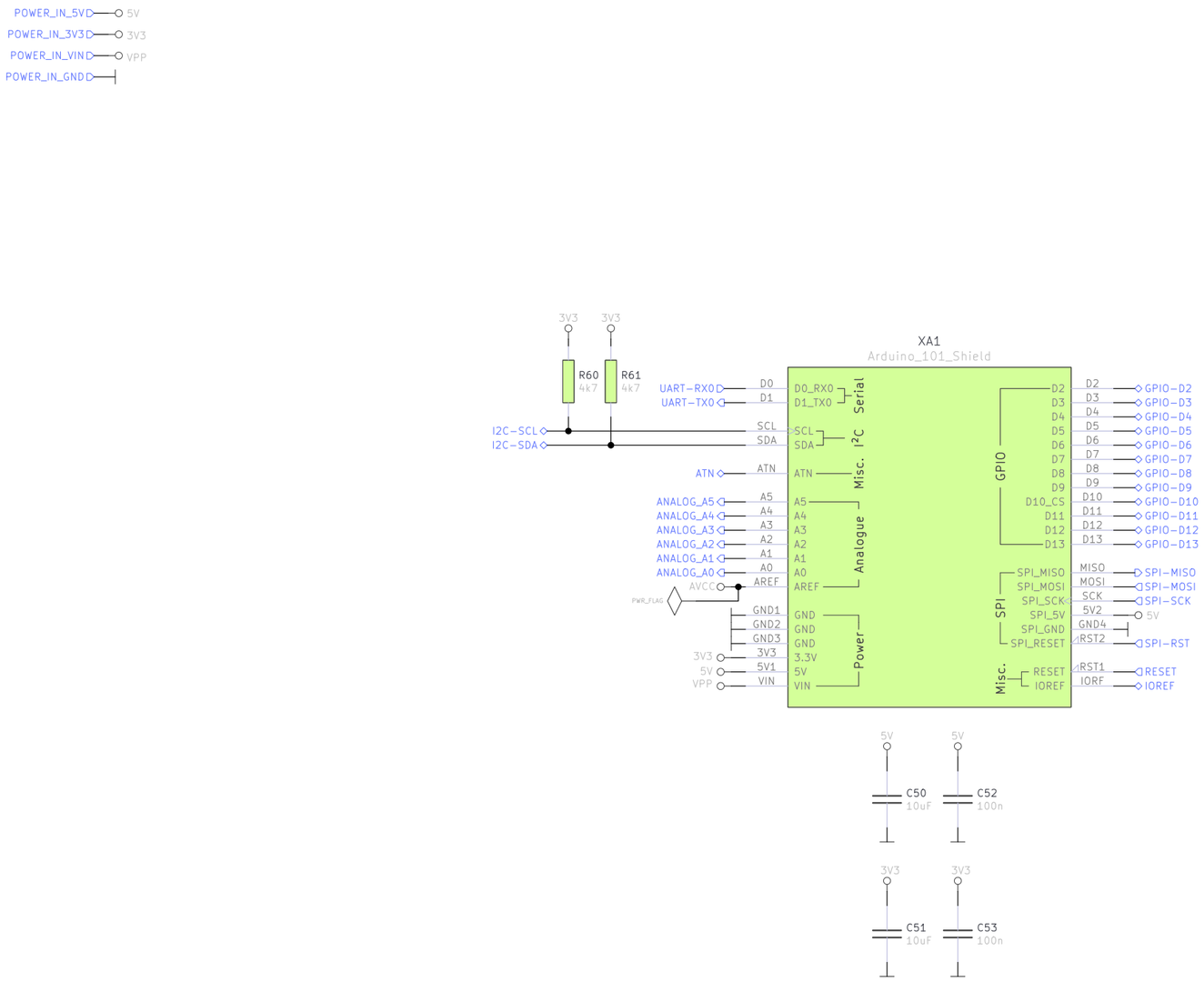

Embedded System Module

Sheet: /Arduino Shield Module/
File: arduino_shield.kicad_sch

Title: Arduino Shield Module

Size: A3	Date: 2020-12-20	**Rev: V1.0**
KiCad E.D.A. kicad (5.99.0-9713-g2bc22de1a5)		Id: 3/11

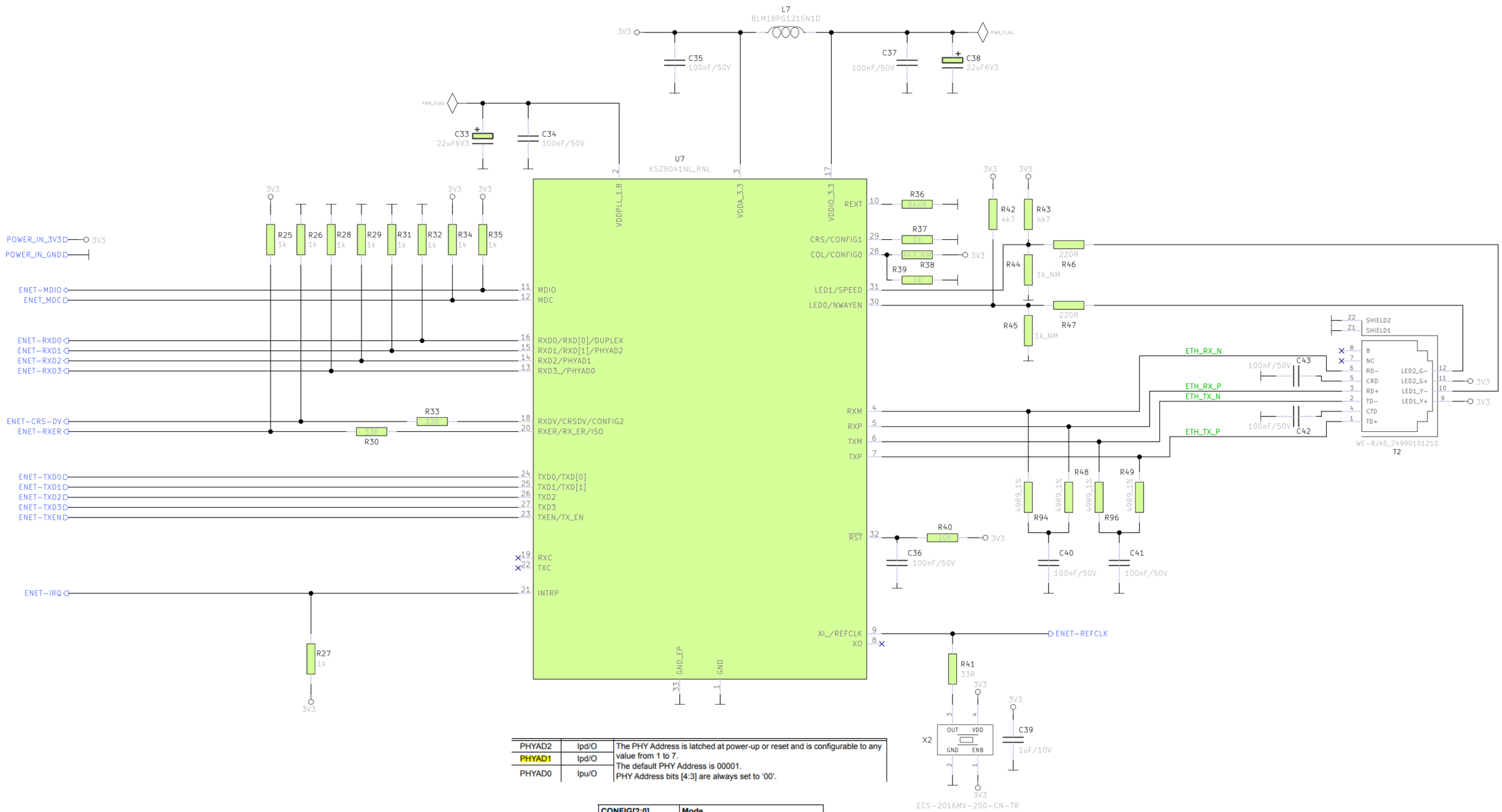

PHYAD2	Ipd/O	The PHY Address is latched at power-up or reset and is configurable to any value from 1 to 7. The default PHY Address is 00001. PHY Address bits [4:3] are always set to '00'.
PHYAD1	Ipd/O	
PHYAD0	Ipu/O	

CONFIG[2:0]	Mode
000	MII (default)
001	RMII
010	Reserved - not used
011	Reserved - not used
100	MII 100 Mbps Preamble Restore
101	Reserved - not used
110	Reserved - not used
111	Reserved - not used

Embedded System Labs

Sheet: /Ethernet Module/
File: ethernet.kicad_sch

Title: Ethernet

Size: A3	Date: 2021-01-13	**Rev: V1.0**
KiCad E.D.A. kicad (5.99.0-9713-g2bc22de1a5)		Id: 4/11

SOM1A
VisionSOM-STM32MP1
POWER_IN_5V0
POWER_IN_3V3
POWER_IN_GND
5V
3V3
NC
GND
VDD_3V3
VDD_COIN_3V
+3.3VOUT
+5VIN
PWR_FLAG
C55
100n
C56
100n
R51
10k
R53
10k
R55
10k
R52
10k
R54
10k
R56
10k
BOOT0
BOOT1
BOOT2
PWR_ON
PWR_LP
JTAG_TDI
JTAG_TMS
JTAG_nTRST
JTAG_TDO
JTAG_TCK
STM32_nRST
JTAG-TMS
JTAG-TRST
JTAG-TDO
JTAG-TCK
STM32-RST
SOM1B
VisionSOM-STM32MP1
SOM1D
VisionSOM-STM32MP1
ENET1-MDIO
ENET1-CRS-DV
ENET1-REFCLK
ADC1_INP15
PA8-GPIO
PA9-GPIO
PA14_IRQD
PA13-GPIO
SPI3_NSS
SPI1_NSS
ADC1_INP3
ADC1_INP19
I2C6-SDA
I2C6-SCL
PA0-GPIO
PA2_TIM2_CH3,TIM5_CH3,LPTIM4_OUT,TIM15_CH1,USART2_TX,SAI2_SCK_B,SDMMC2_D0DIR,_ETH1_MDIO,_MDIOS_MDIO,_LCD_R1,_EVENTOUT,_ADC1_INP14,_WKUP2
PA7_TIM1_CH1N,TIM3_CH2,TIM8_CH1N,SAI4_D1,SPI1_MOSI/I2S1_SDO,SPI6_MOSI,TIM14_CH1,QUADSPI_CLK,ETH1_GMII_RX_DV/ETH1_MII_RX_DV/ETH1_RGMII_RX_CTL/ETH1_RMII_CRS_DV,SAI4_SD_A,_EVENTOUT,ADC1_INP7,ADC1_INN3,ADC2_INP7,ADC2_INN3
PA1_ETH_CLK,TIM2_CH2,TIM5_CH2,LPTIM3_OUT,TIM15_CH1N,USART2_RTS/USART2_DE,UART4_RX,QUADSPI_BK1_IO3,SAI2_MCLK_B,ETH1_GMII_RX_CLK/ETH1_MII_RX_CLK/ETH1_RGMII_RX_CLK/ETH1_RMII_REF_CLK,LCD_R2,EVENTOUT,ADC1_INP17,ADC1_INN16
PA3_TIM2_CH4,TIM5_CH4,LPTIM5_OUT,TIM15_CH2,USART2_RX,LCD_B2,ETH1_GMII_COL/ETH1_MII_COL,LCD_B5,EVENTOUT,ADC1_INP15,PVD_IN
PA8_MCO1,TIM1_CH1,TIM8_BKIN2,I2C3_SCL,SPI3_MOSI/I2S3_SDO,USART1_CK,SDMMC2_CKIN,SDMMC2_D4,OTG_FS_SOF/OTG_HS_SOF,SAI4_SD_B,UART7_RX,LCD_R6,EVENTOUT,
PA9_TIM1_CH2,I2C3_SMBA,SPI2_SCK/I2S2_CK,USART1_TX,SDMMC2_CDIR,SDMMC2_D5,DCMI_D0,LCD_R5,EVENTOUT
PA14_DBTRGO,DBTRGI,MCO2,EVENTOUT
PA13_DBTRGO,DBTRGI,MCO1,UART4_TX,EVENTOUT,BOOTFAILN
PA10_TIM1_CH3,SPI3_NSS/I2S3_WS,USART1_RX,MDIOS_MDIO,SAI4_FS_B,DCMI_D1,LCD_B1,EVENTOUT,OTG_FS_ID,OTG_HS_ID
PA4_HDP0,TIM5_ETR,SAI4_D2,SPI1_NSS/I2S1_WS,SPI3_NSS/I2S3_WS,USART2_CK,SPI6_NSS,SAI4_FS_A,DCMI_HSYNC,LCD_VSYNC,EVENTOUT,ADC1_INP18,ADC2_INP18,DAC_OUT1
PA6_TIM1_BKIN,TIM3_CH1,TIM8_BKIN,SAI4_CK2,SPI1_MISO/I2S1_SDI,SPI6_MISO,TIM13_CH1,MDIOS_MDC,SAI4_SCK_A,DCMI_PIXCLK,LCD_G2,EVENTOUT,ADC1_INP3,ADC2_INP3
PA5_TIM2_CH1/TIM2_ETR,TIM8_CH1N,SAI4_CK1,SPI1_SCK/I2S1_CK,SPI6_SCK,SAI4_MCLK_A,LCD_R4,EVENTOUT,ADC1_INP19,ADC1_INN18,ADC2_INP19,ADC2_INN18,DAC_OUT2
PA12_TIM1_ETR,I2C6_SDA,I2C5_SDA,UART4_TX,USART1_RTS/USART1_DE,SAI2_FS_B,FDCAN1_TX,LCD_R5,EVENTOUT,OTG_FS_DP
PA11_TIM1_CH4,I2C6_SCL,I2C5_SCL,SPI2_NSS/I2S2_WS,UART4_RX,USART1_CTS/USART1_NSS,FDCAN1_RX,LCD_R4,EVENTOUT,OTG_FS_DM
PA0_TIM2_CH1/TIM2_ETR,TIM5_CH1,TIM8_ETR,TIM15_BKIN,USART2_CTS/USART2_NSS,UART4_TX,SDMMC2_CMD,SAI2_SD_B,ETH1_GMII_CRS/ETH1_MII_CRS,EVENTOUT
SOM1E
VisionSOM-STM32MP1
SPI1_SCK
USART1-RXD
SPI1_MISO
USART1-TXD
ENET1-TXD3
UART4-RXD
I2C1-SCL
I2C1-SDA
ENET1-RX-ER
ENET1-RXD2
ENET1-TXD1
SPI1_MOSI
ENET1-TX-EN
ENET1-RXD3
PB7_I2C4_SDA
R7
4k7
PB3_TRACED9,TIM2_CH2,SAI4_CK1,SPI1_SCK/I2S1_CK,SPI3_SCK/I2S3_CK,SPI6_SCK,SDMMC2_D2,SAI4_MCLK_A,UART7_RX,EVENTOUT
PB15_RTC_REFIN,TIM1_CH3N,TIM12_CH2,TIM8_CH3N,USART1_RX,SPI2_MOSI/I2S2_SDO,DFSDM1_CKIN2,SDMMC2_D1,EVENTOUT
PB4_TRACED8,TIM16_BKIN,TIM3_CH1,SAI4_CK2,SPI1_MISO/I2S1_SDI,SPI3_MISO/I2S3_SDI,SPI2_NSS/I2S2_WS,SPI6_MISO,SDMMC2_D3,SAI4_SCK_A,UART7_TX,EVENTOUT
PB14_TIM1_CH2N,TIM12_CH1,TIM8_CH2N,USART1_TX,SPI2_MISO/I2S2_SDI,DFSDM1_DATIN2,USART3_RTS/USART3_DE,SDMMC2_D0,EVENTOUT
PB8_HDP6,TIM16_CH1,TIM4_CH3,DFSDM1_CKIN7,I2C1_SCL,SDMMC1_CKIN,I2C4_SCL,SDMMC2_CKIN,UART4_RX,FDCAN1_RX,SDMMC2_D4,ETH1_GMII_TXD3/ETH1_MII_TXD3/ETH1_RGMII_TXD3,SDMMC1_D4,DCMI_D6,LCD_B6,_EVENTOUT
PB2_TRACED4,RTC_OUT2,SAI1_D1,DFSDM1_CKIN1,USART1_RX,I2S_CKIN,SAI1_SD_A,SPI3_MOSI/I2S3_SDO,UART4_RX,QUADSPI_CLK,EVENTOUT
PB6_TIM16_CH1N,TIM4_CH1,I2C1_SCL,_CEC,I2C4_SCL,USART1_TX,FDCAN2_TX,QUADSPI_BK1_NCS,DFSDM1_DATIN5,UART5_TX,DCMI_D5,EVENTOUT
PB9_HDP7,TIM17_CH1,TIM4_CH4,DFSDM1_DATIN7,I2C1_SDA,SPI2_NSS/I2S2_WS,I2C4_SDA,SDMMC2_CDIR,UART4_TX,FDCAN1_TX,SDMMC2_D5,SDMMC1_CDIR,SDMMC1_D5,DCMI_D7,LCD_B7,EVENTOUT
PB10_TIM2_CH3,LPTIM2_IN1,I2C2_SCL,SPI2_SCK/I2S2_CK,DFSDM1_DATIN7,USART3_TX,QUADSPI_BK1_NCS,ETH1_GMII_RX_ER/ETH1_MII_RX_ER,LCD_G4,EVENTOUT
PB0_TIM1_CH2N,TIM3_CH3,TIM8_CH2N,DFSDM1_CKOUT,UART4_CTS,LCD_R3,ETH1_GMII_RXD2/ETH1_MII_RXD2/ETH1_RGMII_RXD2,MDIOS_MDIO,LCD_G1,EVENTOUT,ADC1_INP9,ADC1_INN5,ADC2_INP9,ADC2_INN5
PB13_TIM1_CH1N,DFSDM1_CKOUT,LPTIM2_OUT,SPI2_SCK/I2S2_CK,DFSDM1_CKIN1,USART3_CTS/USART3_NSS,FDCAN2_TX,ETH1_GMII_TXD1/ETH1_MII_TXD1/ETH1_RGMII_TXD1/ETH1_RMII_TXD1,UART5_TX,EVENTOUT
PB5_ETH_CLK,TIM17_BKIN,TIM3_CH2,SAI4_D1,I2C1_SMBA,SPI1_MOSI/I2S1_SDO,I2C4_SMBA,SPI3_MOSI/I2S3_SDO,SPI6_MOSI,FDCAN2_RX,SAI4_SD_A,ETH1_PPS_OUT,UART5_RX,DCMI_D10,LCD_G7,EVENTOUT
PB11_TIM2_CH4,LPTIM2_ETR,I2C2_SDA,DFSDM1_CKIN7,USART3_RX,ETH1_GMII_TX_EN/ETH1_MII_TX_EN/ETH1_RGMII_TX_CTL/ETH1_RMII_TX_EN,DSI_TE,LCD_G5,EVENTOUT
PB1_TIM1_CH3N,TIM3_CH4,TIM8_CH3N,DFSDM1_DATIN1,LCD_R6,ETH1_GMII_RXD3/ETH1_MII_RXD3/ETH1_RGMII_RXD3,MDIOS_MDC,LCD_G0,EVENTOUT,ADC1_INP5,ADC2_INP5
PB7_TIM17_CH1N,TIM4_CH2,I2C1_SDA,I2C4_SDA,USART1_RX,SDMMC2_D1,DFSDM1_CKIN5,FMC_NL,DCMI_VSYNC,EVENTOUT
SOM1F
VisionSOM-STM32MP1
PC7-GPIO
SPI3_SCK
ENET1-TXD2
ENET1-RXD1
ENET1-RXD0
ADC2_INP10
ENET1-MDC
ADC1_INP13
PC6-GPIO
PC7_HDP4,TIM3_CH2,TIM8_CH2,DFSDM1_DATIN3,I2S3_MCK,USART6_RX,SDMMC1_D123DIR,SDMMC2_D123DIR,SDMMC2_D7,SDMMC1_D7,DCMI_D1,LCD_G6,EVENTOUT
PC10_TRACED2,DFSDM1_CKIN5,SPI3_SCK/I2S3_CK,USART3_TX,UART4_TX,QUADSPI_BK1_IO1,SAI4_MCLK_B,SDMMC1_D2,DCMI_D8,LCD_R2,EVENTOUT
PC2_DFSDM1_CKIN1,SPI2_MISO/I2S2_SDI,DFSDM1_CKOUT,ETH1_GMII_TXD2/ETH1_MII_TXD2/ETH1_RGMII_TXD2,DCMI_PIXCLK,EVENTOUT,ADC1_INP12,ADC1_INN11
PC5_SAI1_D3,DFSDM1_DATIN2,SAI4_D4,_SAI1_D4,SPDIFRX_IN3,ETH1_GMII_RXD1/ETH1_MII_RXD1/ETH1_RGMII_RXD1/ETH1_RMII_RXD1,_SAI4_D3,EVENTOUT,ADC1_INP8,ADC1_INN4,ADC2_INP8,ADC2_INN4
PC4_DFSDM1_CKIN2,I2S1_MCK,SPDIFRX_IN2,ETH1_GMII_RXD0/ETH1_MII_RXD0/ETH1_RGMII_RXD0/ETH1_RMII_RXD0,EVENTOUT,ADC1_INP4,ADC2_INP4
PC0_DFSDM1_CKIN0,LPTIM2_IN2,DFSDM1_DATIN4,SAI2_FS_B,QUADSPI_BK2_NCS,LCD_R5,EVENTOUT,ADC1_INP10,ADC2_INP10
PC1_TRACED0,SAI1_D1,DFSDM1_DATIN0,DFSDM1_CKIN4,SPI2_MOSI/I2S2_SDO,SAI1_SD_A,SDMMC2_CK,ETH1_MDC,MDIOS_MDC,EVENTOUT,ADC1_INP11,ADC1_INN10,ADC2_INP11,ADC2_INN10,TAMP_IN3,WKUP6
PC3_TRACECLK,DFSDM1_DATIN1,SPI2_MOSI/I2S2_SDO,ETH1_GMII_TX_CLK/ETH1_MII_TX_CLK,EVENTOUT,ADC1_INP13,ADC1_INN12
PC6_HDP1,TIM3_CH1,TIM8_CH1,DFSDM1_CKIN3,I2S2_MCK,USART6_TX,SDMMC1_D0DIR,SDMMC2_D0DIR,SDMMC2_D6,DSI_TE,SDMMC1_D6,DCMI_D0,LCD_HSYNC,EVENTOUT
SOM1H
VisionSOM-STM32MP1
PE3-GPIO
PE13-GPIO
PE14-GPIO
PE2_I2C4_SCL
PE0-GPIO/UART8_RX
PE1-GPIO/UART8_TX
PE12-GPIO
PE11-GPIO
PE15-GPIO
R8
4k7
PE3_TRACED0,TIM15_BKIN,SAI1_SD_B,SDMMC2_CK,FMC_A19,EVENTOUT
PE13_HDP2,TIM1_CH3,DFSDM1_CKIN5,SPI4_MISO,SAI2_FS_B,FMC_D10/FMC_DA10,DCMI_D6,LCD_DE,EVENTOUT
PE14_TIM1_CH4,SPI4_MOSI,UART8_RTS/UART8_DE,SAI2_MCLK_B,SDMMC1_D123DIR,FMC_D11/FMC_DA11,LCD_G0,LCD_CLK,EVENTOUT
PE2_TRACECLK,SAI1_CK1,I2C4_SCL,SPI4_SCK,SAI1_MCLK_A,QUADSPI_BK1_IO2,ETH1_GMII_TXD3/ETH1_MII_TXD3/ETH1_RGMII_TXD3,FMC_A23,EVENTOUT
PE0_LPTIM1_ETR,TIM4_ETR,LPTIM2_ETR,SPI3_SCK/I2S3_CK,SAI4_MCLK_B,UART8_RX,SAI2_MCLK_A,FMC_NBL0,DCMI_D2,EVENTOUT
PE1_LPTIM1_IN2,I2S2_MCK,SAI3_SD_B,UART8_TX,FMC_NBL1,DCMI_D3,EVENTOUT
PE12_TIM1_CH3N,DFSDM1_DATIN5,SPI4_SCK,SDMMC1_D0DIR,SAI2_SCK_B,FMC_D9/FMC_DA9,LCD_B4,EVENTOUT
PE11_TIM1_CH2,DFSDM1_CKIN4,SPI4_NSS,USART6_CK,SAI2_SD_B,FMC_D8/FMC_DA8,DCMI_D4,LCD_G3,EVENTOUT
PE15_HDP3,TIM1_BKIN,TIM15_BKIN,USART2_CTS/USART2_NSS,UART8_CTS,FMC_NCE2,FMC_D12/FMC_DA12,LCD_R7,EVENTOUT
SOM1C
VisionSOM-STM32MP1
USB_OTG2_VBUS
USB-OTG2-D_P
USB-OTG2-D_N
USB_OTG2_DP
USB_OTG2_DN
USB-OTG1-D_P
USB-OTG1-D_N
USB_OTG1_DP
USB_OTG1_DN
SOM1I
VisionSOM-STM32MP1
ADC1_INP2
PF10-GPIO
PG6-GPIO
PG10-GPIO
PG7-GPIO
UART4-TXD
PG12-GPIO
PG13-GPIO
ENET1-TXD0
PF11_SPI5_MOSI,SAI2_SD_B,DCMI_D12,LCD_G5,EVENTOUT,ADC1_INP2
PF10_PF10_TIM16_BKIN,SAI1_D3,SAI4_D4,SAI1_D4,QUADSPI_CLK,SAI4_D3,DCMI_D11,_LCD_DE,EVENTOUT
PG6_TRACED14,TIM17_BKIN,SDMMC2_CMD,DCMI_D12,LCD_R7,EVENTOUT
PG10_TRACED10,UART8_CTS,LCD_G3,SAI2_SD_B,QUADSPI_BK2_IO2,FMC_NE3,DCMI_D2,LCD_B2,EVENTOUT
PG7_TRACED5,_SAI1_MCLK_A,_USART6_CK,_UART8_RTS/UART8_DE,_QUADSPI_CLK,_QUADSPI_BK2_IO3,_DCMI_D13,_LCD_CLK,_EVENTOUT
PG11_TRACED11,USART1_TX,UART4_TX,SPDIFRX_IN0,ETH1_GMII_TX_EN/ETH1_MII_TX_EN/ETH1_RGMII_TX_CTL/ETH1_RMII_TX_EN,DCMI_D3,LCD_B3,_EVENTOUT
PG12_LPTIM1_IN1,SPI6_MISO,SAI4_CK2,USART6_RTS/USART6_DE,SPDIFRX_IN1,LCD_B4,SAI4_SCK_A,ETH1_PHY_INTN,FMC_NE4,LCD_B1,EVENTOUT
PG13_TRACED0,LPTIM1_OUT,SAI1_CK2,SAI4_CK1,SPI6_SCK,SAI1_SCK_A,USART6_CTS/USART6_NSS,SAI4_MCLK_A,ETH1_GMII_TXD0/ETH1_MII_TXD0/ETH1_RGMII_TXD0/ETH1_RMII_TXD0,FMC_A24,LCD_R0,EVENTOUT
PG14_TRACED1,LPTIM1_ETR,SPI6_MOSI,_SAI4_D1,USART6_TX,QUADSPI_BK2_IO3,SAI4_SD_A,ETH1_GMII_TXD1/ETH1_MII_TXD1/ETH1_RGMII_TXD1/ETH1_RMII_TXD1,FMC_A25,LCD_B0,EVENTOUT
SOM1J
VisionSOM-STM32MP1
MIPI_DSI_CLK_P
MIPI_DSI_CLK_N
MIPI_DSI_D1_P
MIPI_DSI_D1_N
MIPI_DSI_D0_P
MIPI_DSI_D0_N
DSI_CKP
DSI_CKN
DSI_D1P
DSI_D1N
DSI_D0P
DSI_D0N
SOM1G
VisionSOM-STM32MP1
PD15_TIM4_PWM_CH4
PD9-GPIO
PD8-GPIO
PD13_MIPI_DSI_TE
SPI3_MOSI
SPI3_MISO
PD12-GPIO
PD11-GPIO
PD14-GPIO
PD15_TIM4_CH4,SAI3_MCLK_A,UART8_CTS,FMC_D1/FMC_DA1,LCD_R1,EVENTOUT
PD9_DFSDM1_DATIN3,SAI3_SD_B,USART3_RX,FMC_D14/FMC_DA14,DCMI_HSYNC,LCD_B0,EVENTOUT
PD8_DFSDM1_CKIN3,SAI3_SCK_B,USART3_TX,SPDIFRX_IN1,FMC_D13/FMC_DA13,LCD_B7,EVENTOUT
PD13_LPTIM1_OUT,TIM4_CH2,I2C4_SDA,I2C1_SDA,I2S3_MCK,QUADSPI_BK1_IO3,SAI2_SCK_A,FMC_A18,DSI_TE,EVENTOUT
PD6_TIM16_CH1N,SAI1_D1,DFSDM1_CKIN4,DFSDM1_DATIN1,SPI3_MOSI/I2S3_SDO,SAI1_SD_A,USART2_RX,FMC_NWAIT,DCMI_D10,LCD_B2,EVENTOUT
PD10_RTC_REFIN,TIM16_BKIN,DFSDM1_CKOUT,I2C5_SMBA,SPI3_MISO/I2S3_SDI,SAI3_FS_B,USART3_CK,FMC_D15/FMC_DA15,LCD_B3,EVENTOUT
PD12_LPTIM1_IN1,TIM4_CH1,LPTIM2_IN1,I2C4_SCL,I2C1_SCL,USART3_RTS/USART3_DE,QUADSPI_BK1_IO1,SAI2_FS_A,FMC_ALE/FMC_A17,EVENTOUT
PD11_LPTIM2_IN2,I2C4_SMBA,I2C1_SMBA,USART3_CTS/USART3_NSS,QUADSPI_BK1_IO0,SAI2_SD_A,FMC_CLE/FMC_A16,EVENTOUT
PD14_TIM4_CH3,_SAI3_MCLK_B,UART8_CTS,FMC_AD0/FMC_D0,_EVENTOUT
Embedded System Labs
Sheet: /STM32MP1 module/
File: mpu_module.kicad_sch
Title: STM32MP1 Module
Size: A3
Date: 2020-12-19
Rev: V1.0
KiCad E.D.A. kicad (5.99.0-9713-g2bc22de1a5)
Id: 5/11

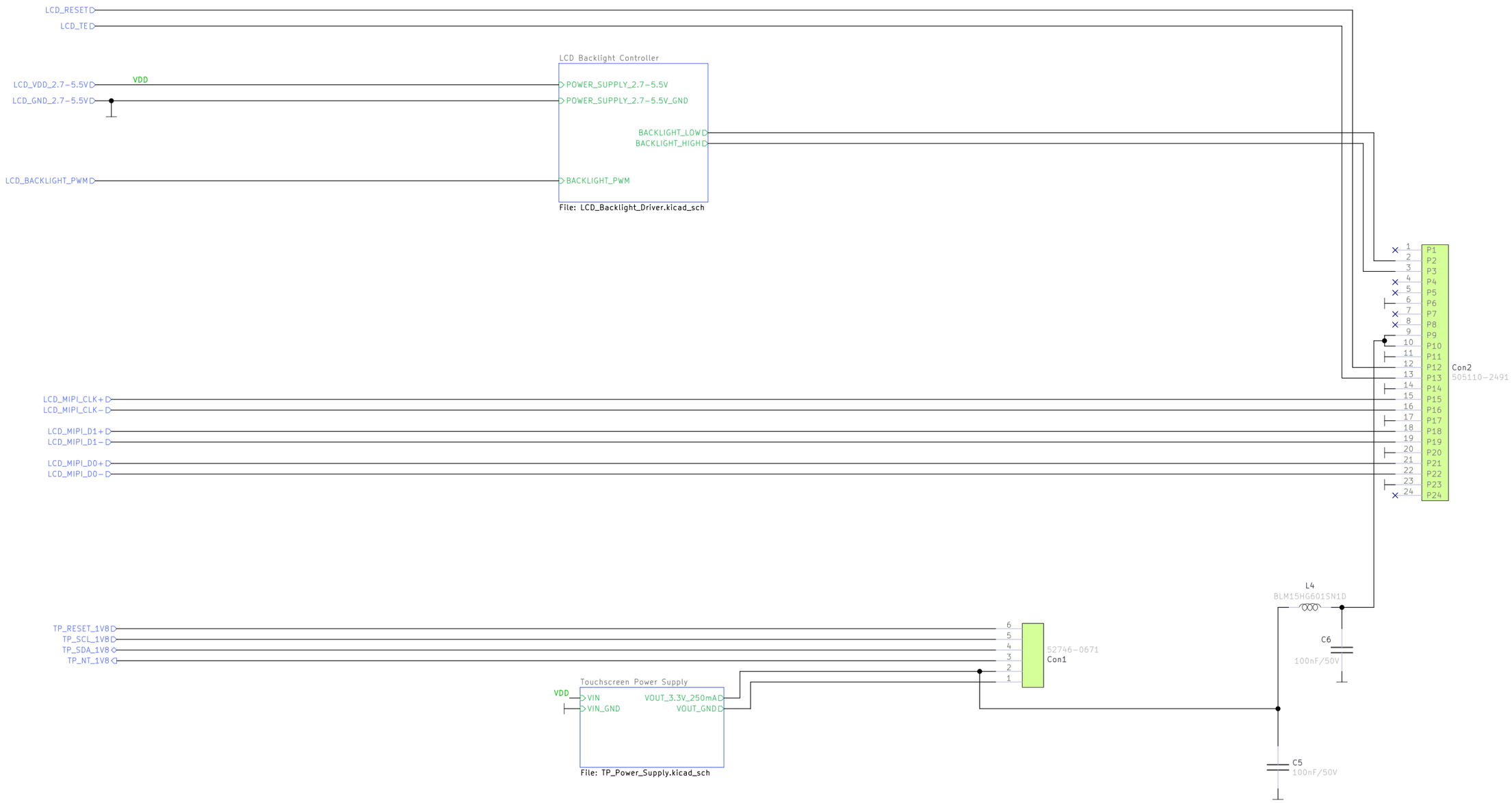

5.0 IPS 720X1280 MIPI +CTP
PH720128T004-ZBC02
Embedded System Labs

Sheet: /LCD+Touchscreen/
File: LCD_Touchscreen.kicad_sch

Title: LCD MiPi and Touchscreen module

Size: A3	Date: 2020-12-19	**Rev: V1.0**
KiCad E.D.A. kicad (5.99.0-9713-g2bc22de1a5)		Id: 6/11

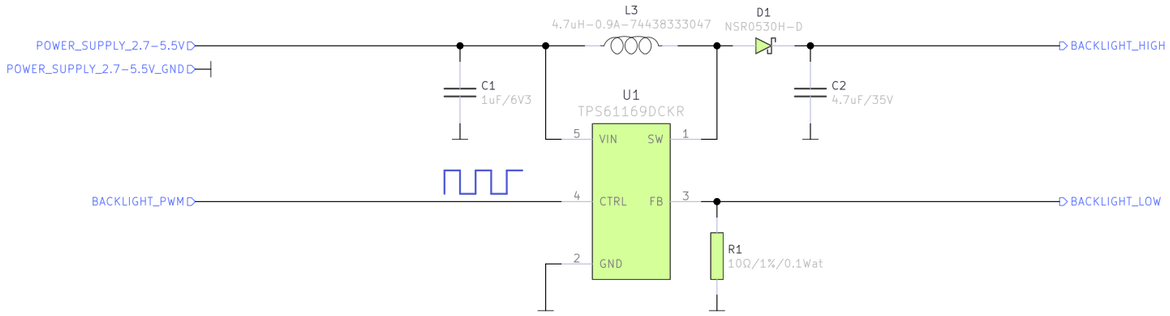

Embedded System Labs

Sheet: /LCD+Touchscreen/LCD Backlight Controller/
File: LCD_Backlight_Driver.kicad_sch

Title: LCD Backlight Controller

Size: A3	Date: 2020-12-19	**Rev: V1.0**
KiCad E.D.A. kicad (5.99.0-9713-g2bc22de1a5)		Id: 7/11

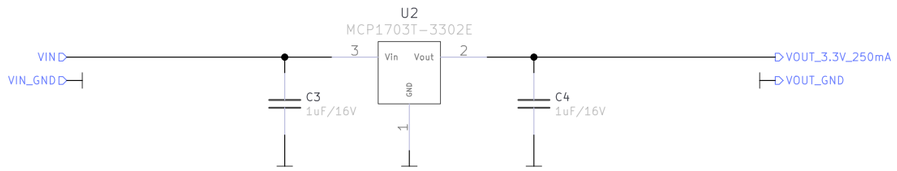

Embedded System Labs

Sheet: /LCD+Touchscreen/Touchscreen Power Supply/
File: TP_Power_Supply.kicad_sch

Title: 2.8V LDO Regulator

Size: A3	Date: 2020-12-19	**Rev: V1.0**
KiCad E.D.A. kicad (5.99.0-9713-g2bc22de1a5)		Id: 8/11

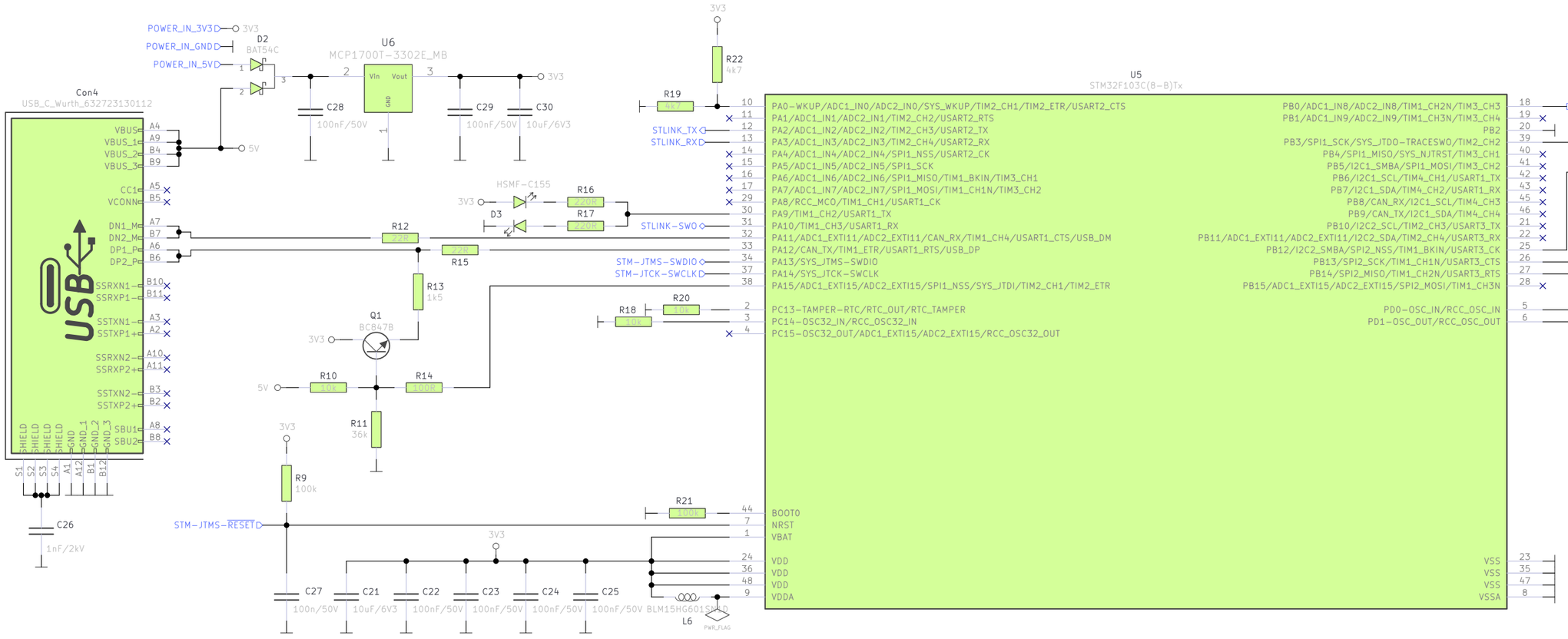

Embedded System Labs

Sheet: /STLink Module/
File: stlink.kicad_sch

Title: STLink Module

Size: A3	Date: 2020-12-20	**Rev: V1.0**
KiCad E.D.A. kicad (5.99.0-9713-g2bc22de1a5)		Id: 9/11

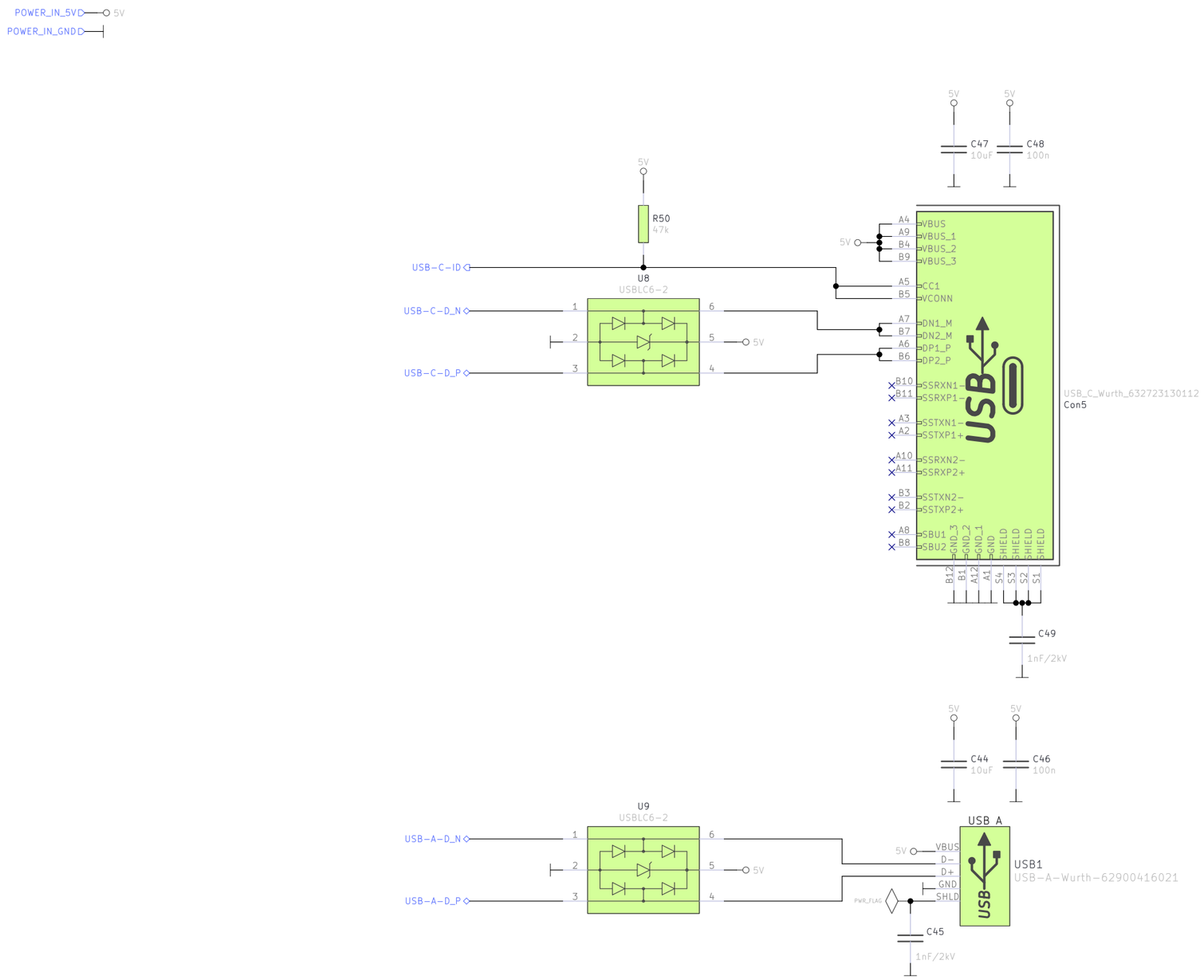

Embedded System Labs

Sheet: /USB Module/
File: usb.kicad_sch

Title: USB Section

Size: A3	Date: 2021-01-13	**Rev: V1.0**
KiCad E.D.A. kicad (5.99.0-9713-g2bc22de1a5)		Id: 10/11

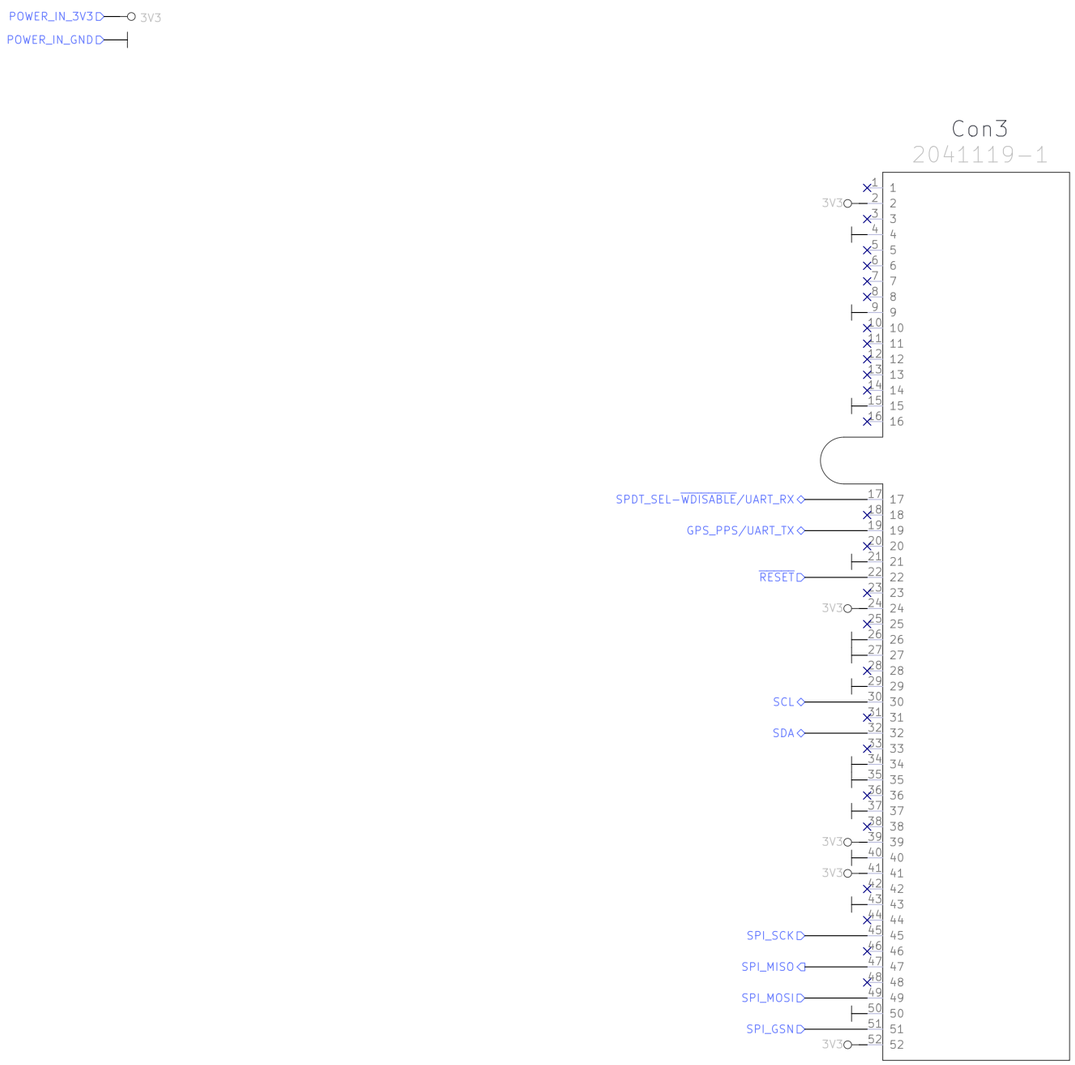

Embedded System Labs

Sheet: /MiniPci Module/
File: minipci_module.kicad_sch

Title: Minipci Module

Size: A3	Date: 2021-01-10	**Rev: V1.0**
KiCad E.D.A. kicad (5.99.0-9713-g2bc22de1a5)		Id: 11/11