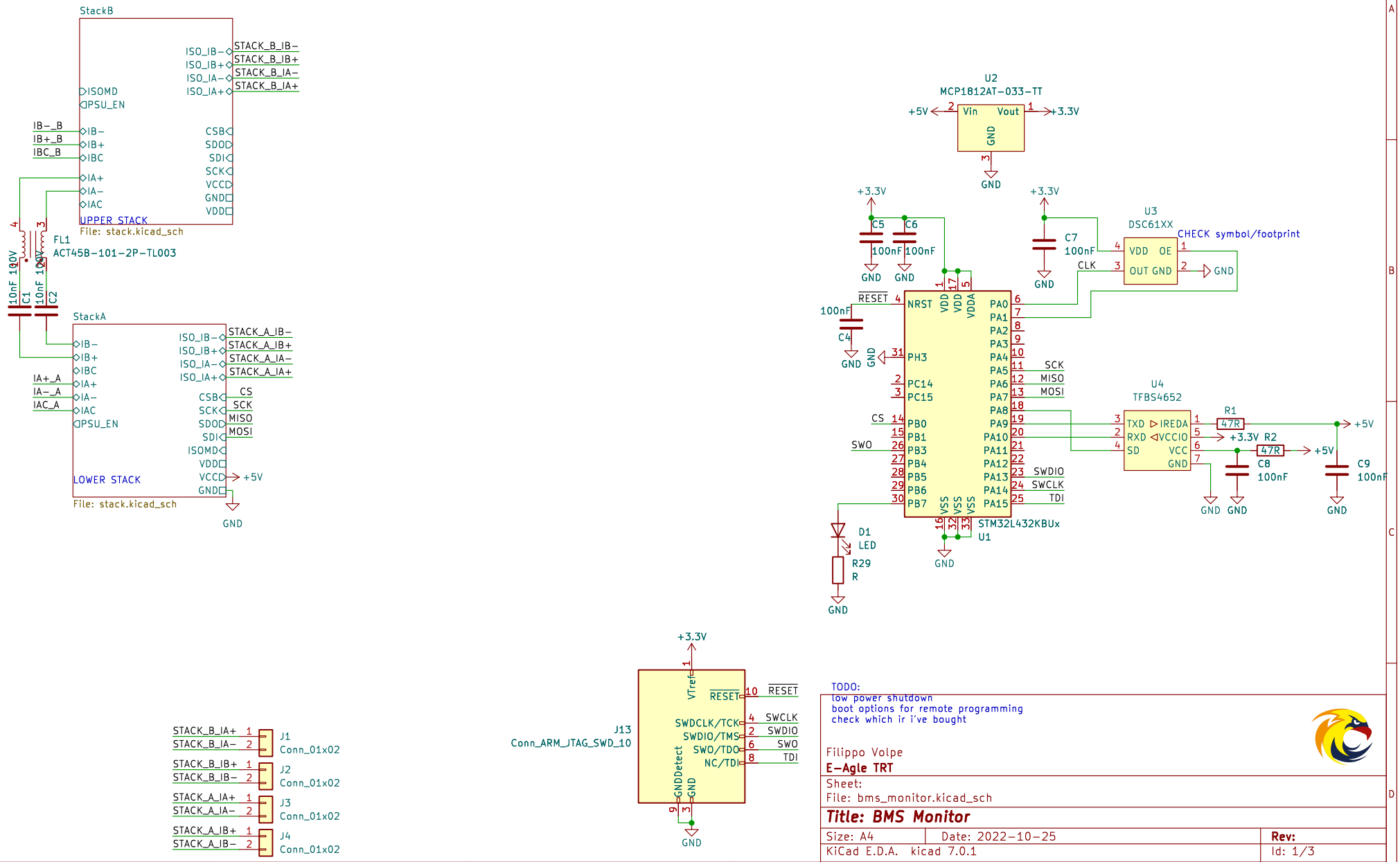
StackB
ISO_IB−
ISO_IB+
ISO_IA−
ISO_IA+
STACK_B_IB−
STACK_B_IB+
STACK_B_IA−
STACK_B_IA+
ISOMD
PSU_EN
IB−_B
IB+_B
IBC_B
IB−
IB+
IBC
IA+
IA−
IAC
CSB
SDO
SDI
SCK
VCC
GND
VDD
UPPER STACK
File: stack.kicad_sch
FL1
ACT45B−101−2P−TL003
10nF 100V
C1
C2
StackA
STACK_A_IB−
STACK_A_IB+
STACK_A_IA−
STACK_A_IA+
IA+_A
IA−_A
IAC_A
CS
SCK
MISO
MOSI
ISOMD
PSU_EN
LOWER STACK
+5V
GND
U2
MCP1812AT−033−TT
Vin
Vout
+3.3V
C5
C6
100nF
C7
U3
DSC61XX
CHECK symbol/footprint
VDD
OE
OUT
CLK
RESET
NRST
VDD
VDDA
PA0
PA1
PA2
PA3
PA4
PA5
PA6
PA7
PA8
PA9
PA10
PA11
PA12
PA13
PA14
PA15
PH3
PC14
PC15
PB0
PB1
PB3
PB4
PB5
PB6
PB7
VSS
SWDIO
SWCLK
TDI
STM32L432KBUx
U1
C4
D1
LED
R29
R
U4
TFBS4652
TXD
RXD
SD
IREDA
VCCIO
VCC
R1
47R
R2
C8
C9
J13
Conn_ARM_JTAG_SWD_10
VTref
SWDCLK/TCK
SWDIO/TMS
SWO/TDO
NC/TDI
GNDDetect
J1
Conn_01x02
J2
J3
J4
TODO:
low power shutdown
boot options for remote programming
check which ir i've bought
Filippo Volpe
E−Agle TRT
Sheet:
File: bms_monitor.kicad_sch
Title: BMS Monitor
Size: A4
Date: 2022−10−25
Rev:
KiCad E.D.A. kicad 7.0.1
Id: 1/3

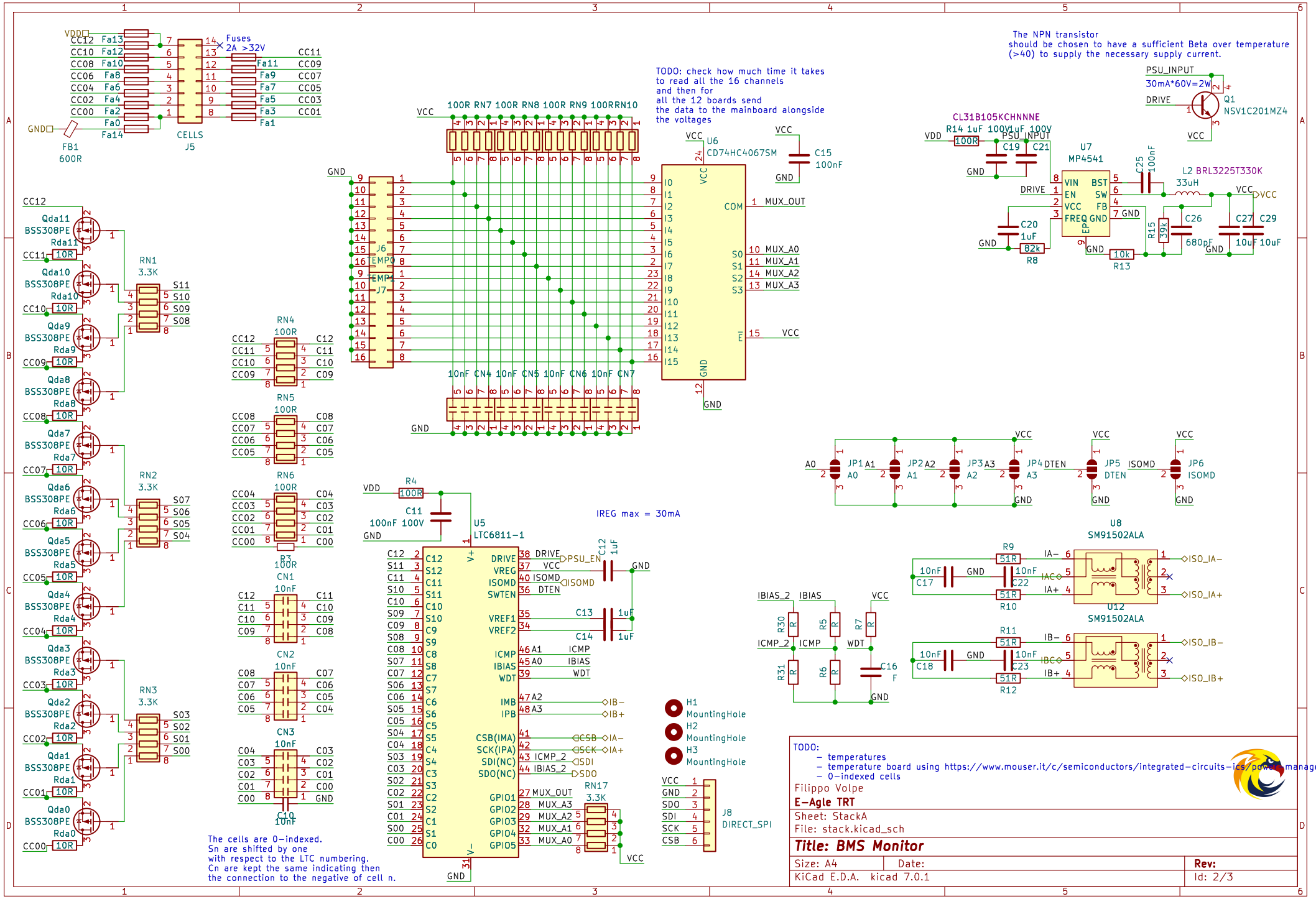
Fuses
2A >32V
CELLS
J5
FB1
600R
VDD
GND
TODO: check how much time it takes
to read all the 16 channels
and then for
all the 12 boards send
the data to the mainboard alongside
the voltages
100R RN7 100R RN8 100R RN9 100RRN10
10nF CN4 10nF CN5 10nF CN6 10nF CN7
U6
CD74HC4067SM
MUX_OUT
MUX_A0
MUX_A1
MUX_A2
MUX_A3
C15
100nF
The NPN transistor
should be chosen to have a sufficient Beta over temperature
(>40) to supply the necessary supply current.
PSU_INPUT
30mA*60V=2W
DRIVE
Q1
NSV1C201MZ4
CL31B105KCHNNNE
R14 1uF 100V
C19 1uF 100V
C21
U7
MP4541
VIN
EN
VCC
FREQ
BST
SW
FB
GND
EP
C25
100nF
L2 BRL3225T330K
33uH
C20
1uF
R8
82k
R13
10k
R15
39k
C26
680pF
C27
10uF
C29
10uF
RN1
3.3K
RN2
3.3K
RN3
3.3K
RN4
100R
RN5
100R
RN6
100R
R3
100R
CN1
10nF
CN2
10nF
CN3
10nF
C10
10nF
R4
100R
C11
100nF 100V
U5
LTC6811-1
IREG max = 30mA
DRIVE
VREG
ISOMD
SWTEN
VREF1
VREF2
ICMP
IBIAS
WDT
IMB
IPB
CSB(IMA)
SCK(IPA)
SDI(NC)
SDO(NC)
GPIO1
GPIO2
GPIO3
GPIO4
GPIO5
PSU_EN
C12
1uF
C13
1uF
C14
1uF
RN17
3.3K
The cells are 0-indexed.
Sn are shifted by one
with respect to the LTC numbering.
Cn are kept the same indicating then
the connection to the negative of cell n.
H1
MountingHole
H2
MountingHole
H3
MountingHole
J8
DIRECT_SPI
JP1
JP2
JP3
JP4
JP5
JP6
DTEN
ISOMD
U8
SM91502ALA
U12
SM91502ALA
R9
51R
R10
51R
R11
51R
R12
51R
C17
10nF
C22
10nF
C18
10nF
C23
10nF
IBIAS_2
IBIAS
ICMP_2
ICMP
WDT
R30
R5
R7
R31
R6
C16
F
ISO_IA-
ISO_IA+
ISO_IB-
ISO_IB+
TODO:
- temperatures
- temperature board using https://www.mouser.it/c/semiconductors/integrated-circuits-ics/power-management-ic
- 0-indexed cells
Filippo Volpe
E-Agle TRT
Sheet: StackA
File: stack.kicad_sch
Title: BMS Monitor
Size: A4
Date:
Rev:
KiCad E.D.A. kicad 7.0.1
Id: 2/3

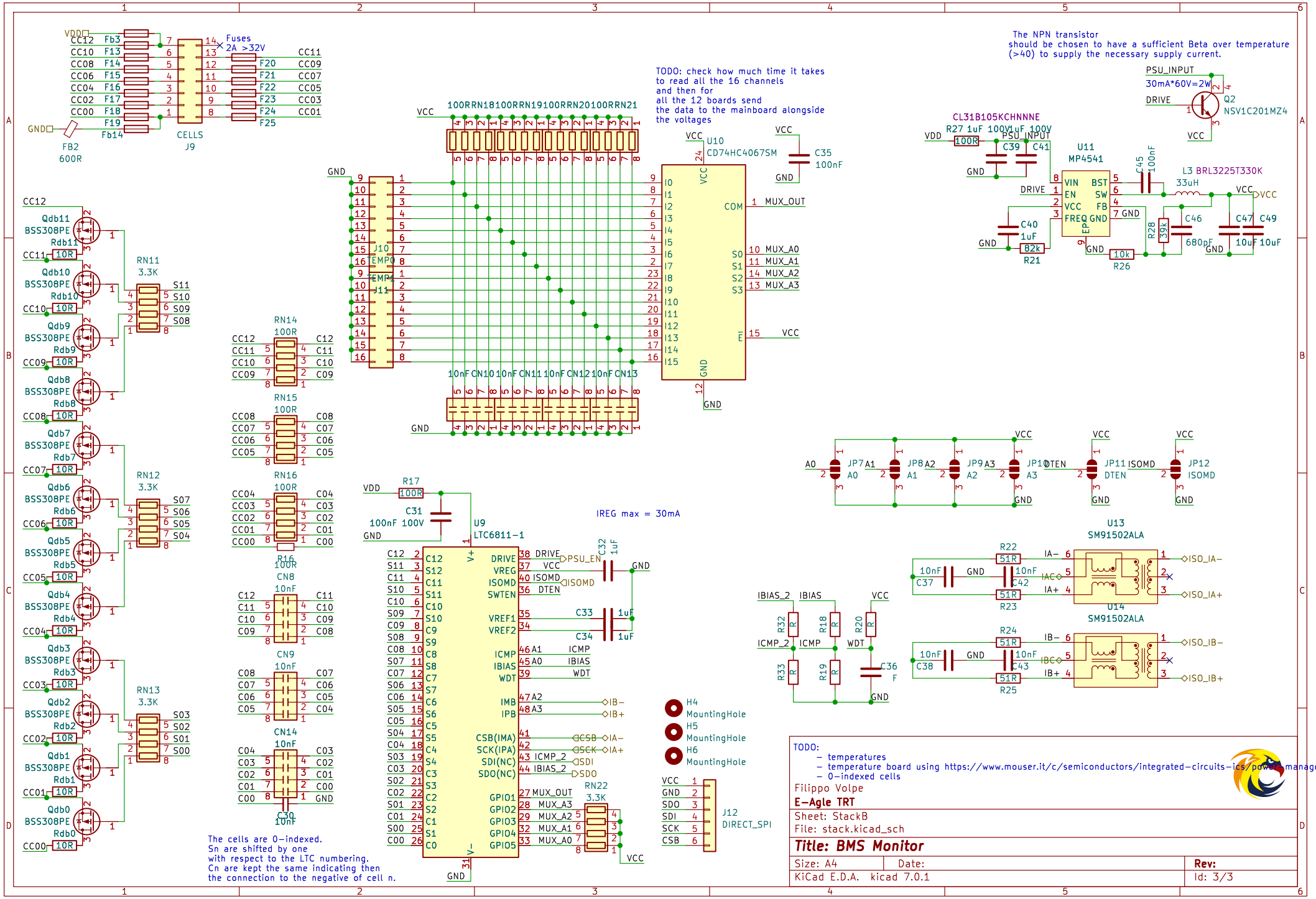
Fuses
2A >32V
CELLS
J9
FB2
600R
TODO: check how much time it takes
to read all the 16 channels
and then for
all the 12 boards send
the data to the mainboard alongside
the voltages
U10
CD74HC4067SM
MUX_OUT
MUX_A0
MUX_A1
MUX_A2
MUX_A3
J10
J11
The NPN transistor
should be chosen to have a sufficient Beta over temperature
(>40) to supply the necessary supply current.
PSU_INPUT
30mA*60V=2W
Q2
NSV1C201MZ4
CL31B105KCHNNNE
U11
MP4541
L3 BRL3225T330K
33uH
RN11
3.3K
RN12
3.3K
RN13
3.3K
RN14
100R
RN15
100R
RN16
100R
CN8
CN9
CN14
U9
LTC6811-1
IREG max = 30mA
U13
SM91502ALA
U14
SM91502ALA
H4
MountingHole
H5
MountingHole
H6
MountingHole
J12
DIRECT_SPI
The cells are 0-indexed.
Sn are shifted by one
with respect to the LTC numbering.
Cn are kept the same indicating then
the connection to the negative of cell n.
TODO:
- temperatures
- temperature board using https://www.mouser.it/c/semiconductors/integrated-circuits-ics/power-management-ic
- 0-indexed cells
Filippo Volpe
E-Agle TRT
Sheet: StackB
File: stack.kicad_sch
Title: BMS Monitor
Size: A4
Date:
Rev:
KiCad E.D.A. kicad 7.0.1
Id: 3/3