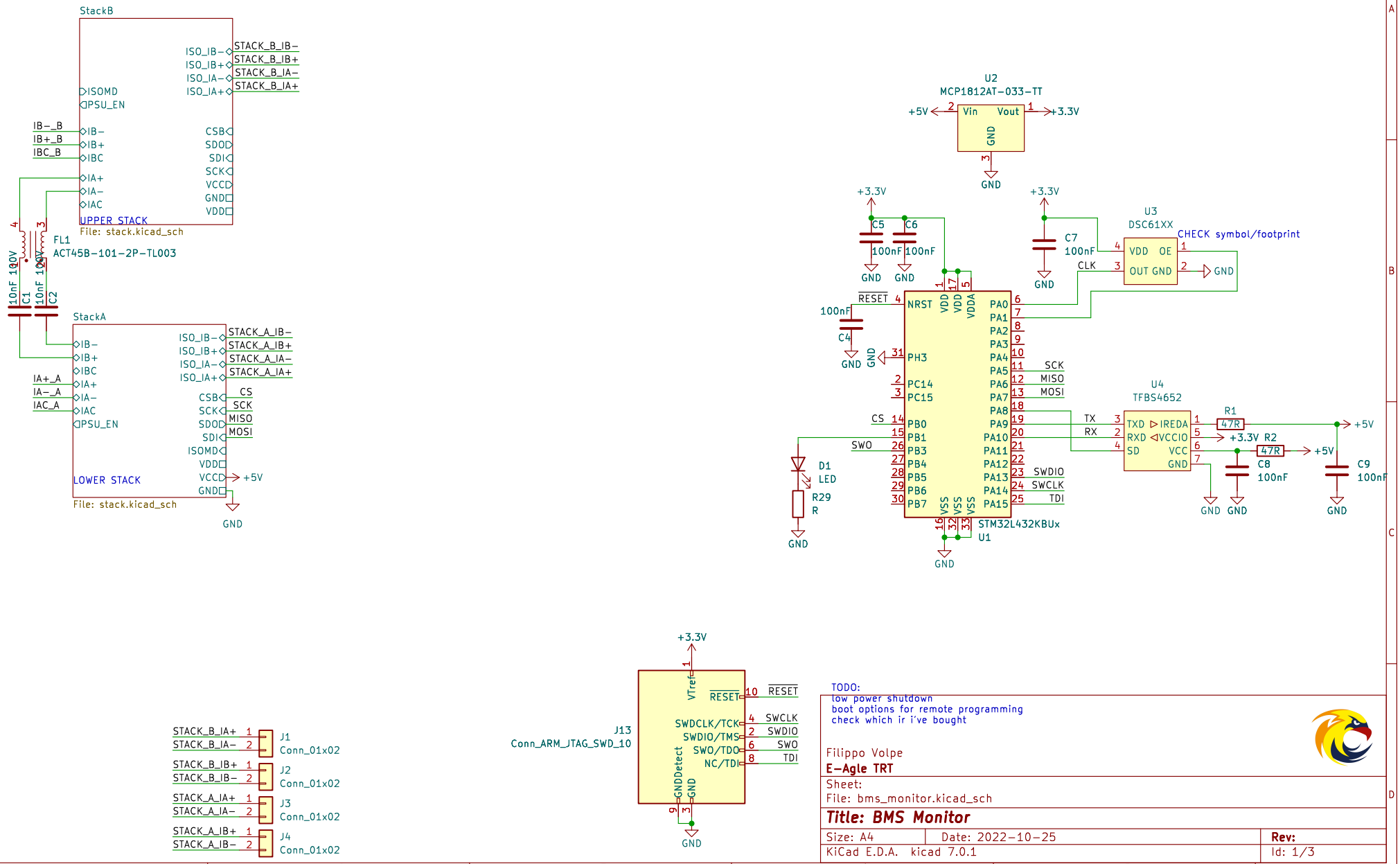
StackB
ISO_IB−
ISO_IB+
ISO_IA−
ISO_IA+
STACK_B_IB−
STACK_B_IB+
STACK_B_IA−
STACK_B_IA+
ISOMD
PSU_EN
IB−_B
IB+_B
IBC_B
IB−
IB+
IBC
IA+
IA−
IAC
CSB
SDO
SDI
SCK
VCC
GND
VDD
UPPER STACK
File: stack.kicad_sch
FL1
ACT45B−101−2P−TL003
10nF 100V
C1
C2
StackA
STACK_A_IB−
STACK_A_IB+
STACK_A_IA−
STACK_A_IA+
IA+_A
IA−_A
IAC_A
CS
SCK
MISO
MOSI
ISOMD
LOWER STACK
+5V
GND
U2
MCP1812AT−033−TT
Vin
Vout
+3.3V
C5
C6
100nF
C7
U3
DSC61XX
CHECK symbol/footprint
VDD
OE
OUT
CLK
RESET
C4
NRST
VDD
VDDA
PH3
PC14
PC15
PB0
PB1
PB3
PB4
PB5
PB6
PB7
VSS
PA0
PA1
PA2
PA3
PA4
PA5
PA6
PA7
PA8
PA9
PA10
PA11
PA12
PA13
PA14
PA15
SWO
SWDIO
SWCLK
TDI
STM32L432KBUx
U1
D1
LED
R29
R
U4
TFBS4652
TX
RX
TXD
RXD
SD
IREDA
VCCIO
VCC
R1
47R
R2
C8
C9
J1
Conn_01x02
J2
J3
J4
J13
Conn_ARM_JTAG_SWD_10
VTref
SWDCLK/TCK
SWDIO/TMS
SWO/TDO
NC/TDI
GNDDetect
TODO:
low power shutdown
boot options for remote programming
check which ir i've bought
Filippo Volpe
E-Agle TRT
Sheet:
File: bms_monitor.kicad_sch
Title: BMS Monitor
Size: A4
Date: 2022-10-25
Rev:
KiCad E.D.A. kicad 7.0.1
Id: 1/3

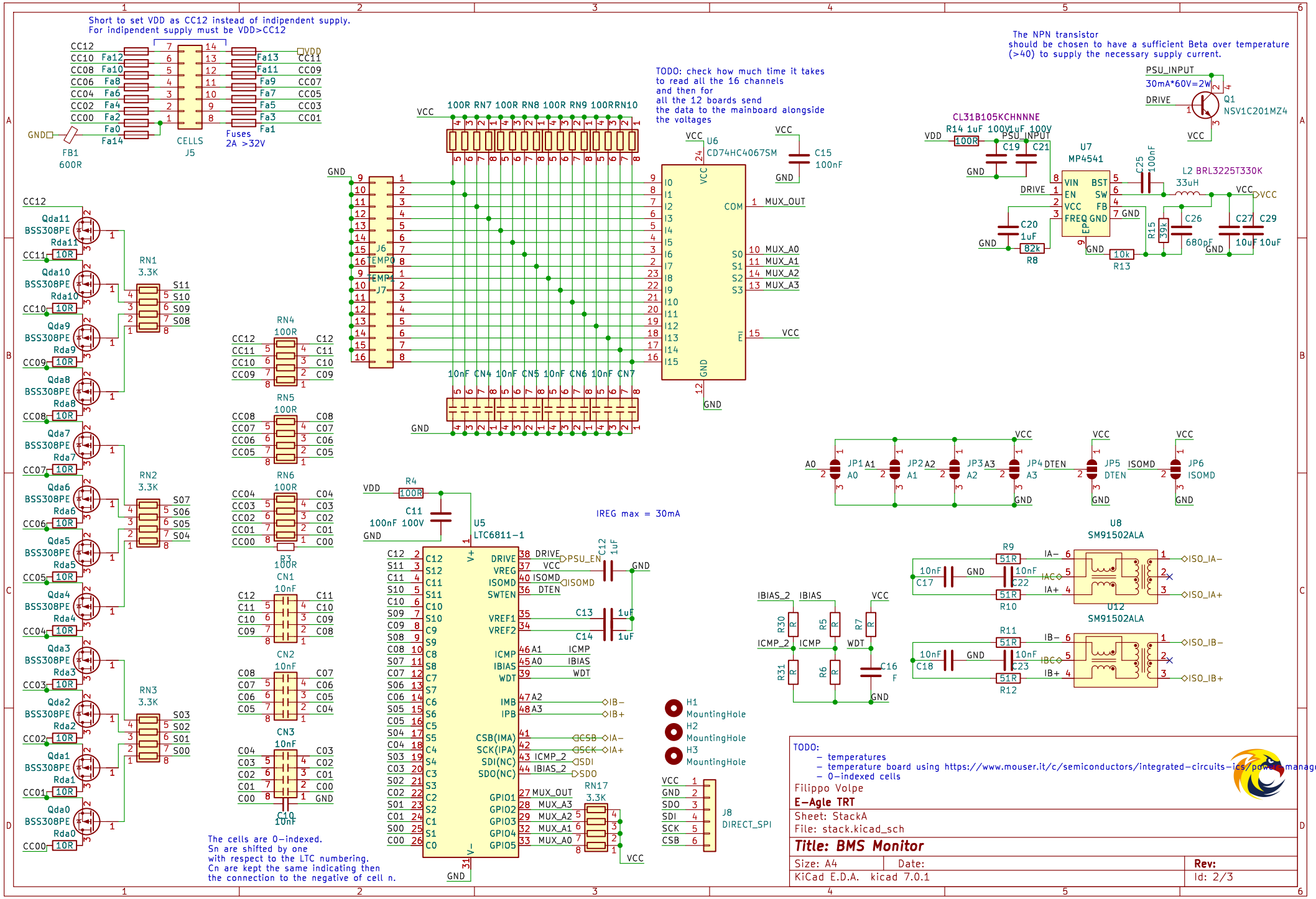
Short to set VDD as CC12 instead of indipendent supply.
For indipendent supply must be VDD>CC12
CELLS
J5
Fuses
2A >32V
FB1
600R
TODO: check how much time it takes
to read all the 16 channels
and then for
all the 12 boards send
the data to the mainboard alongside
the voltages
CD74HC4067SM
U6
J6
J7
EMP0
EMP1
The NPN transistor
should be chosen to have a sufficient Beta over temperature
(>40) to supply the necessary supply current.
PSU_INPUT
30mA*60V=2W
Q1
NSV1C201MZ4
CL31B105KCHNNNE
R14 1uF 100V
MP4541
U7
L2 BRL3225T330K
33uH
IREG max = 30mA
LTC6811-1
U5
U8
SM91502ALA
U12
SM91502ALA
H1
MountingHole
H2
MountingHole
H3
MountingHole
J8
DIRECT_SPI
The cells are 0-indexed.
Sn are shifted by one
with respect to the LTC numbering.
Cn are kept the same indicating then
the connection to the negative of cell n.
TODO:
- temperatures
- temperature board using https://www.mouser.it/c/semiconductors/integrated-circuits-ics/power-management-ic
- 0-indexed cells
Filippo Volpe
E-Agle TRT
Sheet: StackA
File: stack.kicad_sch
Title: BMS Monitor
Size: A4
Date:
Rev:
KiCad E.D.A. kicad 7.0.1
Id: 2/3

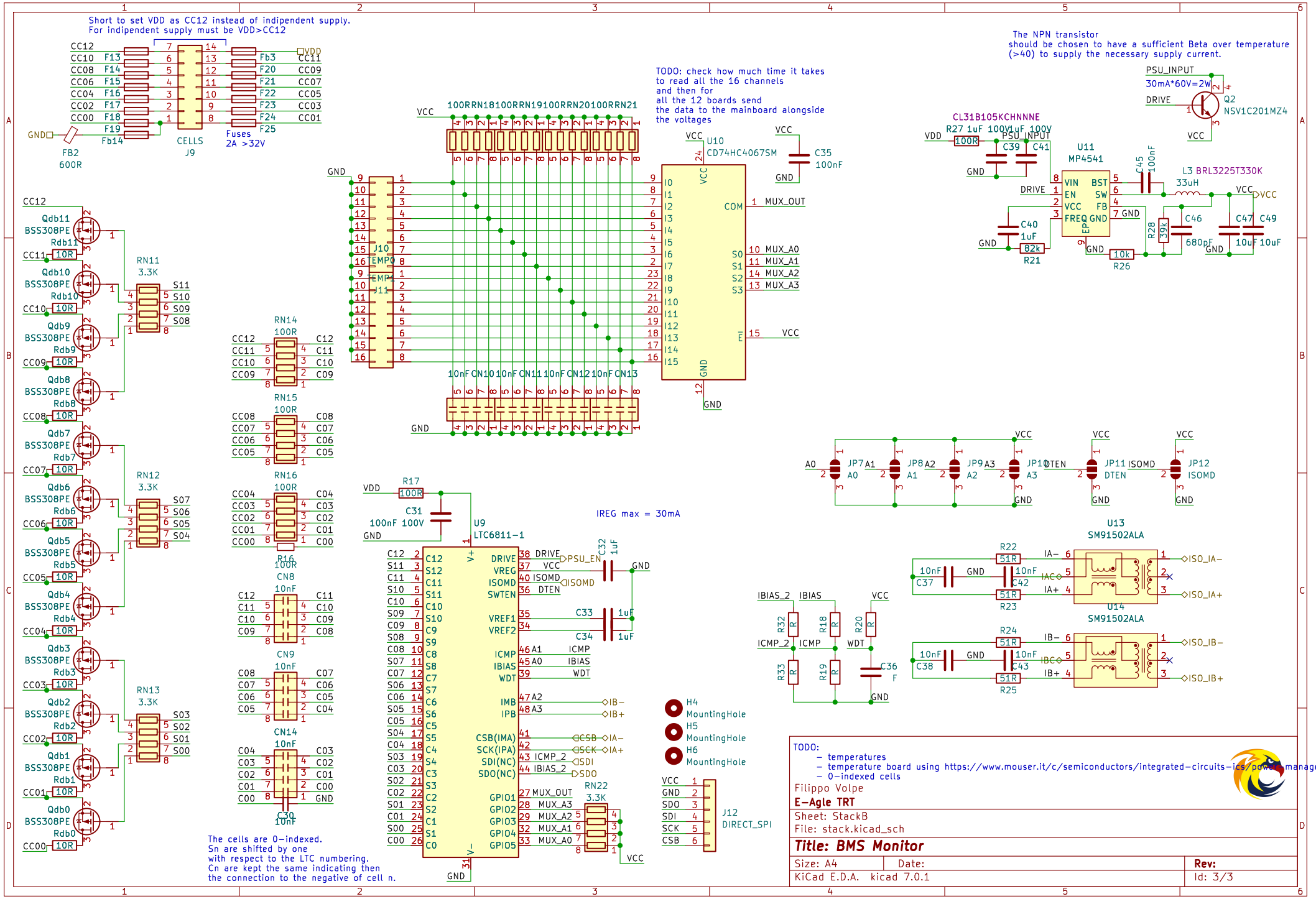
Short to set VDD as CC12 instead of indipendent supply.
For indipendent supply must be VDD>CC12
CELLS
J9
Fuses
2A >32V
FB2
600R
TODO: check how much time it takes
to read all the 16 channels
and then for
all the 12 boards send
the data to the mainboard alongside
the voltages
CD74HC4067SM
U10
J10
EMP0
EMP1
J11
The NPN transistor
should be chosen to have a sufficient Beta over temperature
(>40) to supply the necessary supply current.
PSU_INPUT
30mA*60V=2W
Q2
NSV1C201MZ4
CL31B105KCHNNNE
MP4541
U11
L3 BRL3225T330K
33uH
IREG max = 30mA
U9
LTC6811-1
U13
SM91502ALA
U14
SM91502ALA
H4
MountingHole
H5
MountingHole
H6
MountingHole
J12
DIRECT_SPI
The cells are 0-indexed.
Sn are shifted by one
with respect to the LTC numbering.
Cn are kept the same indicating then
the connection to the negative of cell n.
TODO:
- temperatures
- temperature board using https://www.mouser.it/c/semiconductors/integrated-circuits-ics/power-management-ic
- 0-indexed cells
Filippo Volpe
E-Agle TRT
Sheet: StackB
File: stack.kicad_sch
Title: BMS Monitor
Size: A4
Date:
Rev:
KiCad E.D.A. kicad 7.0.1
Id: 3/3