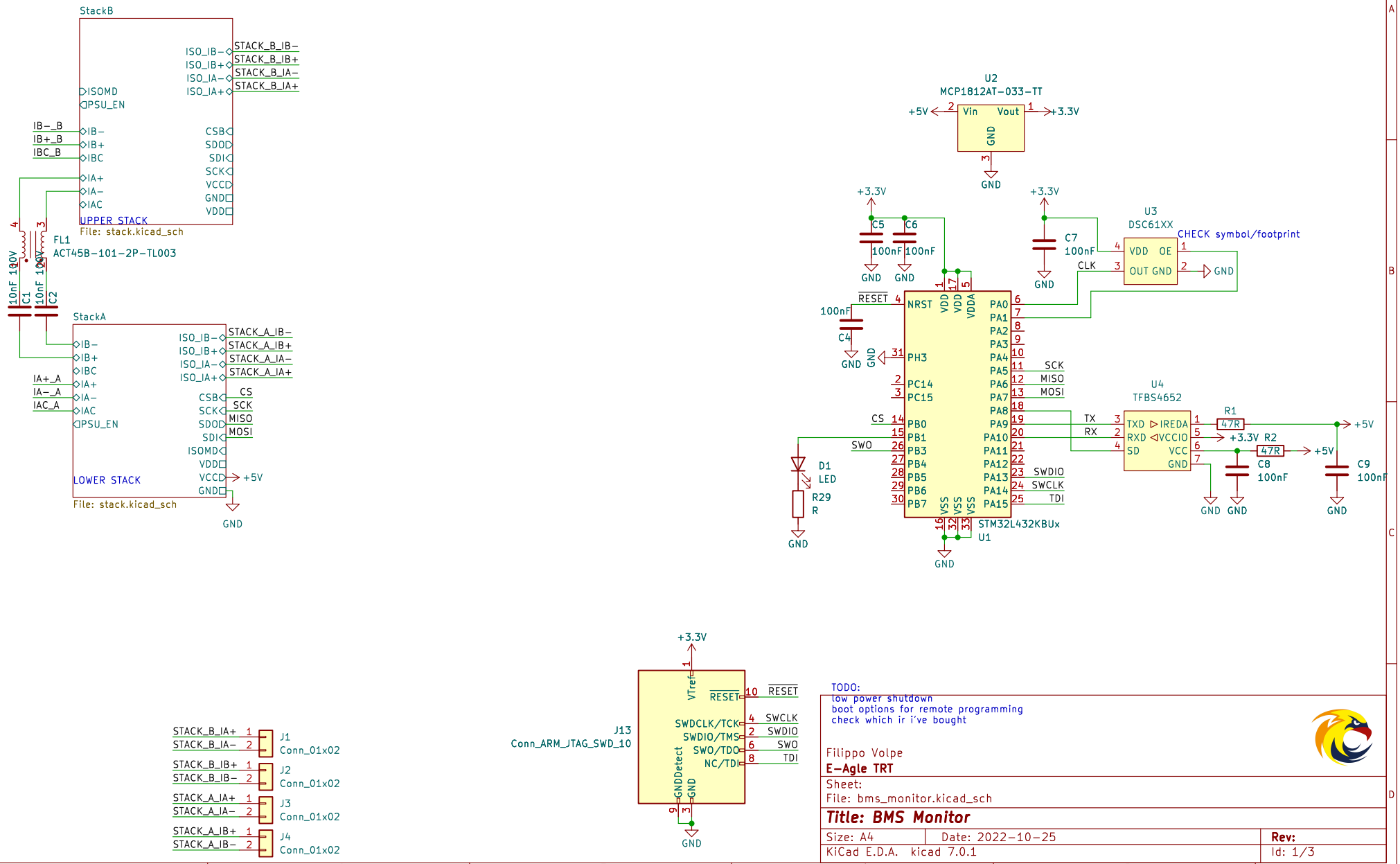
StackB
ISO_IB−
ISO_IB+
ISO_IA−
ISO_IA+
STACK_B_IB−
STACK_B_IB+
STACK_B_IA−
STACK_B_IA+
ISOMD
PSU_EN
IB−_B
IB+_B
IBC_B
IB−
IB+
IBC
IA+
IA−
IAC
CSB
SDO
SDI
SCK
VCC
GND
VDD
UPPER STACK
File: stack.kicad_sch
FL1
ACT45B−101−2P−TL003
10nF 100V
C1
C2
StackA
STACK_A_IB−
STACK_A_IB+
STACK_A_IA−
STACK_A_IA+
IA+_A
IA−_A
IAC_A
CS
SCK
MISO
MOSI
ISOMD
VDD
+5V
LOWER STACK
File: stack.kicad_sch
GND
U2
MCP1812AT−033−TT
Vin
Vout
+5V
+3.3V
U3
DSC61XX
CHECK symbol/footprint
VDD
OE
OUT
C5
C6
C7
100nF
CLK
RESET
NRST
VDD
VDDA
PA0
PA1
PA2
PA3
PA4
PA5
PA6
PA7
PA8
PA9
PA10
PA11
PA12
PA13
PA14
PA15
PH3
PC14
PC15
PB0
PB1
PB3
PB4
PB5
PB6
PB7
VSS
C4
SWO
D1
LED
R29
R
U4
TFBS4652
TXD
RXD
SD
IREDA
VCCIO
VCC
TX
RX
R1
47R
R2
C8
C9
STM32L432KBUx
U1
J13
Conn_ARM_JTAG_SWD_10
VTref
SWDCLK/TCK
SWDIO/TMS
NC/TDI
GNDDetect
J1
J2
J3
J4
Conn_01x02
TODO:
low power shutdown
boot options for remote programming
check which ir i've bought
Filippo Volpe
E-Agle TRT
Sheet:
File: bms_monitor.kicad_sch
Title: BMS Monitor
Size: A4
Date: 2022-10-25
Rev:
KiCad E.D.A. kicad 7.0.1
Id: 1/3

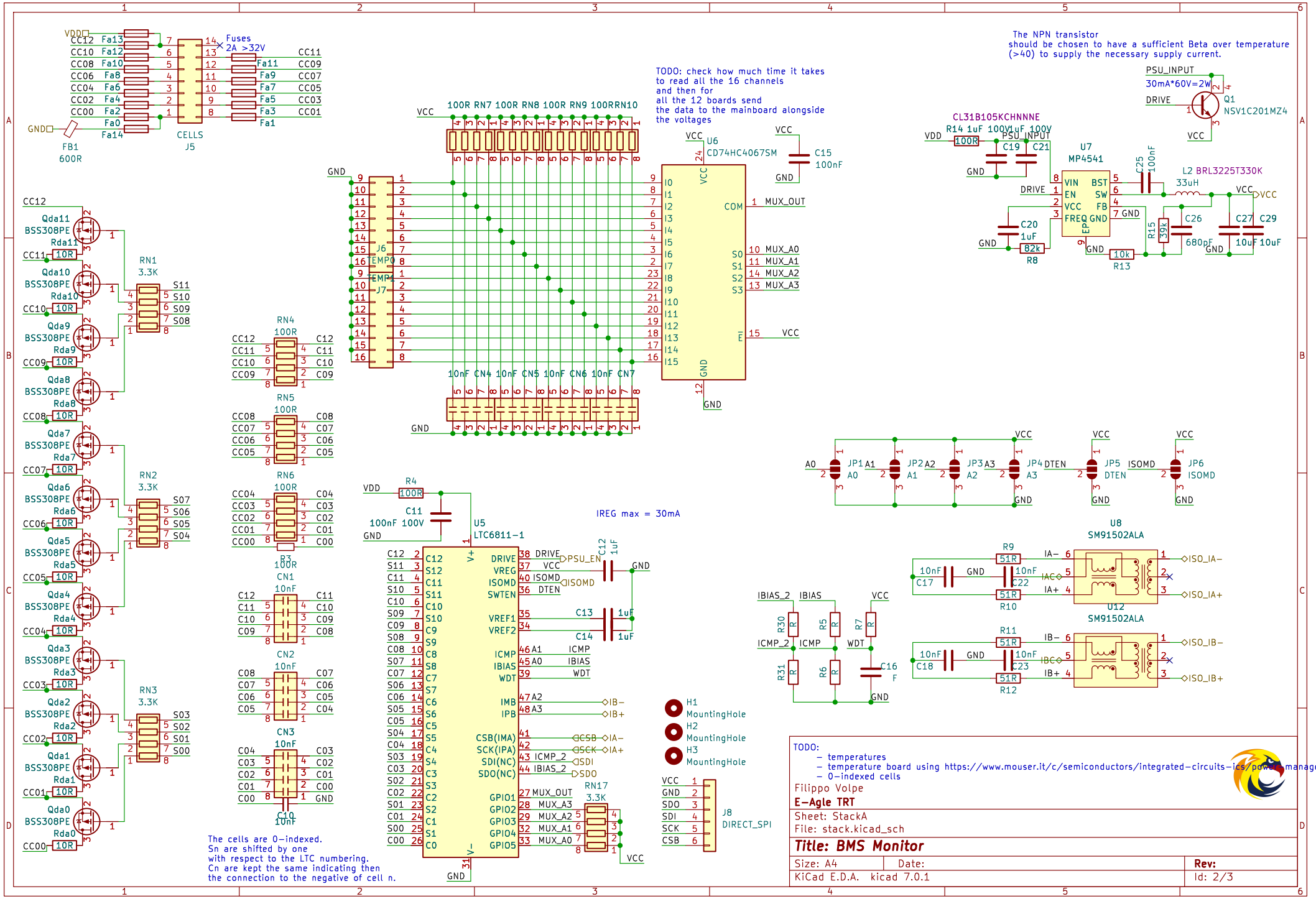
Fuses
2A >32V
CELLS
J5
FB1
600R
TODO: check how much time it takes
to read all the 16 channels
and then for
all the 12 boards send
the data to the mainboard alongside
the voltages
U6
CD74HC4067SM
J6
J7
EMP0
EMP1
MUX_OUT
MUX_A0
MUX_A1
MUX_A2
MUX_A3
The NPN transistor
should be chosen to have a sufficient Beta over temperature
(>40) to supply the necessary supply current.
PSU_INPUT
30mA*60V=2W
Q1
NSV1C201MZ4
CL31B105KCHNNNE
U7
MP4541
L2 BRL3225T330K
33uH
RN1
3.3K
RN2
3.3K
RN3
3.3K
RN4
100R
RN5
100R
RN6
100R
RN7 100R RN8 100R RN9 100RRN10
10nF CN4 10nF CN5 10nF CN6 10nF CN7
CN1
CN2
CN3
U5
LTC6811-1
IREG max = 30mA
RN17
3.3K
H1
MountingHole
H2
MountingHole
H3
MountingHole
J8
DIRECT_SPI
JP1
JP2
JP3
JP4
JP5
JP6
U8
SM91502ALA
U12
SM91502ALA
ISO_IA−
ISO_IA+
ISO_IB−
ISO_IB+
The cells are 0-indexed.
Sn are shifted by one
with respect to the LTC numbering.
Cn are kept the same indicating then
the connection to the negative of cell n.
TODO:
- temperatures
- temperature board using https://www.mouser.it/c/semiconductors/integrated-circuits-ics/power-management-ic
- 0-indexed cells
Filippo Volpe
E-Agle TRT
Sheet: StackA
File: stack.kicad_sch
Title: BMS Monitor
Size: A4
Date:
Rev:
KiCad E.D.A. kicad 7.0.1
Id: 2/3

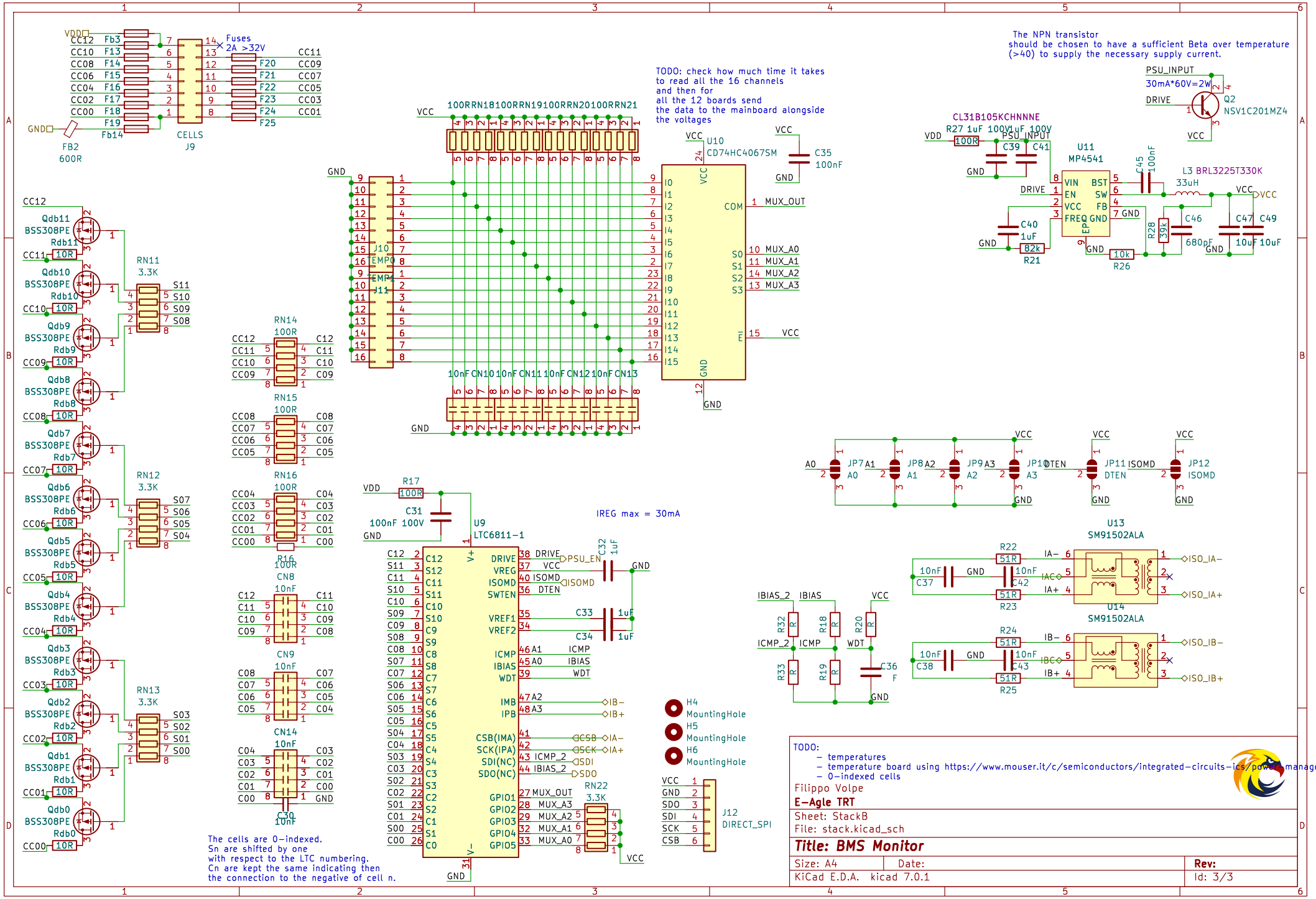
Fuses
2A >32V
CELLS
J9
FB2
600R
TODO: check how much time it takes
to read all the 16 channels
and then for
all the 12 boards send
the data to the mainboard alongside
the voltages
U10
CD74HC4067SM
J10
J11
EMP0
EMP1
MUX_OUT
MUX_A0
MUX_A1
MUX_A2
MUX_A3
C35
100nF
The NPN transistor
should be chosen to have a sufficient Beta over temperature
(>40) to supply the necessary supply current.
PSU_INPUT
30mA*60V=2W
DRIVE
Q2
NSV1C201MZ4
CL31B105KCHNNNE
R27 1uF 100V
C39 1uF 100V
C41
U11
MP4541
L3 BRL3225T330K
33uH
C45
100nF
C40
1uF
R21
82k
R26
10k
R28
39k
C46
680pF
C47 10uF
C49 10uF
RN11
3.3K
RN12
3.3K
RN13
3.3K
RN14
100R
RN15
100R
RN16
100R
R16
100R
CN8
10nF
CN9
10nF
CN14
10nF
C30
10nF
R17
100R
C31
100nF 100V
U9
LTC6811-1
IREG max = 30mA
C32
1uF
C33
1uF
C34
1uF
RN22
3.3K
The cells are 0-indexed.
Sn are shifted by one
with respect to the LTC numbering.
Cn are kept the same indicating then
the connection to the negative of cell n.
H4
MountingHole
H5
MountingHole
H6
MountingHole
J12
DIRECT_SPI
JP7
JP8
JP9
JP10
JP11
JP12
ISOMD
DTEN
U13
SM91502ALA
U14
SM91502ALA
R22
R23
R24
R25
C37
C38
C42
C43
ISO_IA-
ISO_IA+
ISO_IB-
ISO_IB+
IBIAS_2
IBIAS
ICMP_2
ICMP
WDT
R32
R33
R18
R19
R20
C36
F
TODO:
- temperatures
- temperature board using https://www.mouser.it/c/semiconductors/integrated-circuits-ics/power-management-ic
- 0-indexed cells
Filippo Volpe
E-Agle TRT
Sheet: StackB
File: stack.kicad_sch
Title: BMS Monitor
Size: A4
Date:
Rev:
KiCad E.D.A. kicad 7.0.1
Id: 3/3