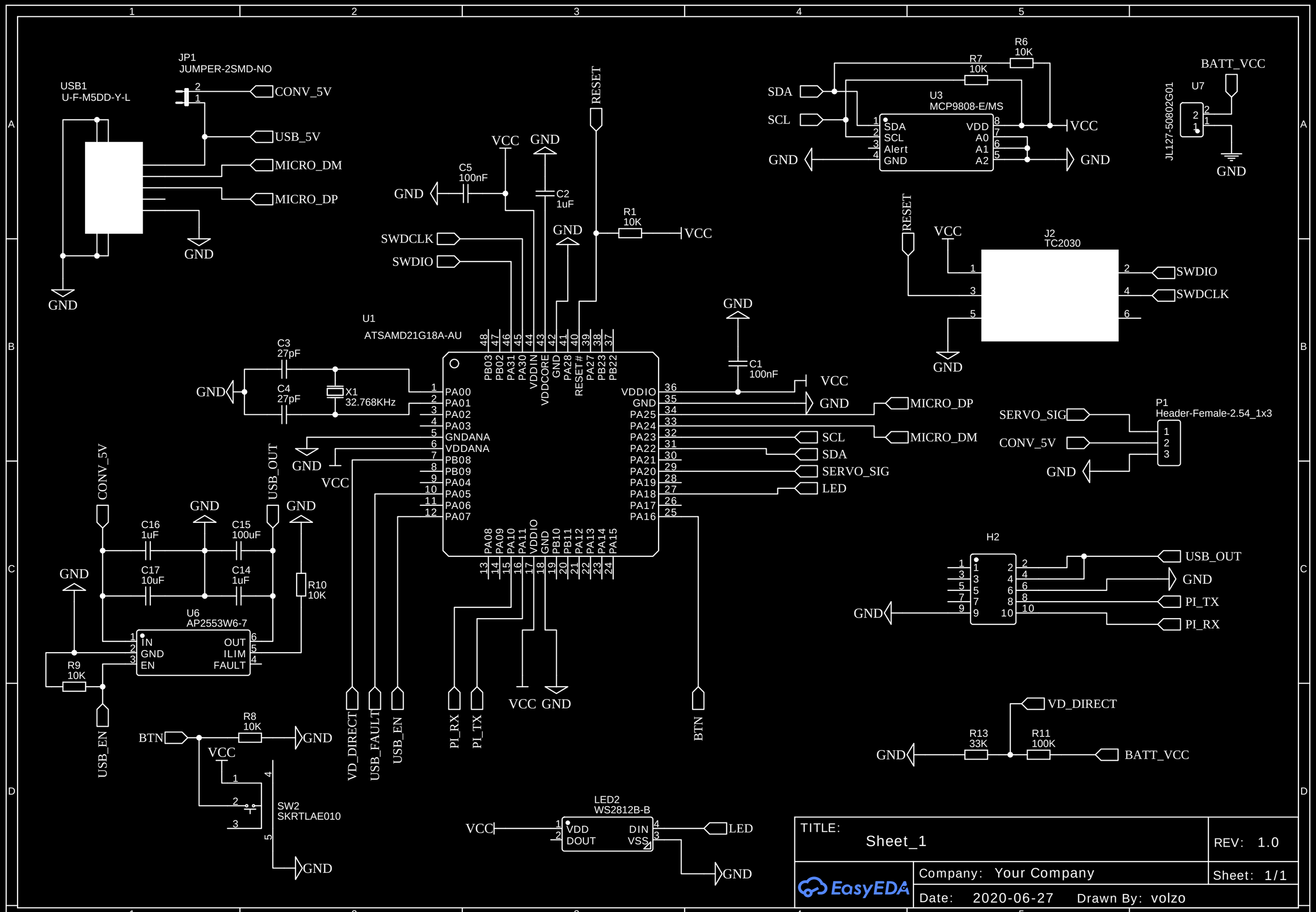

TITLE: Sheet_1	REV: 1.0
Company: Your Company	Sheet: 1/1
Date: 2020-06-27 Drawn By: volzo	

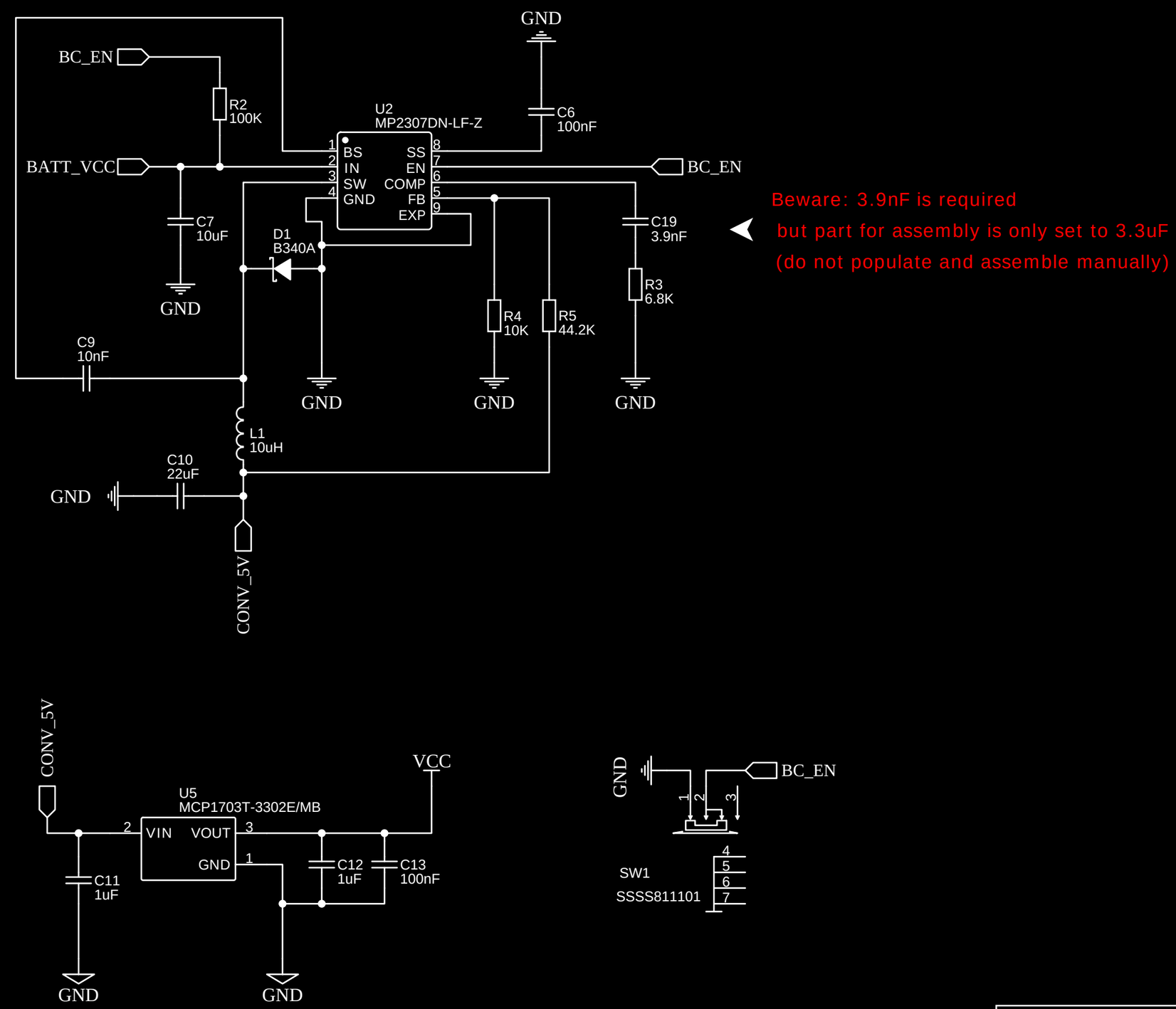

Beware: 3.9nF is required
but part for assembly is only set to 3.3uF
(do not populate and assemble manually)

TITLE: Sheet_2	REV: 1.0
EasyEDA Company: Your Company	Sheet: 1/1
Date: 2020-06-27 Drawn By: volzo	