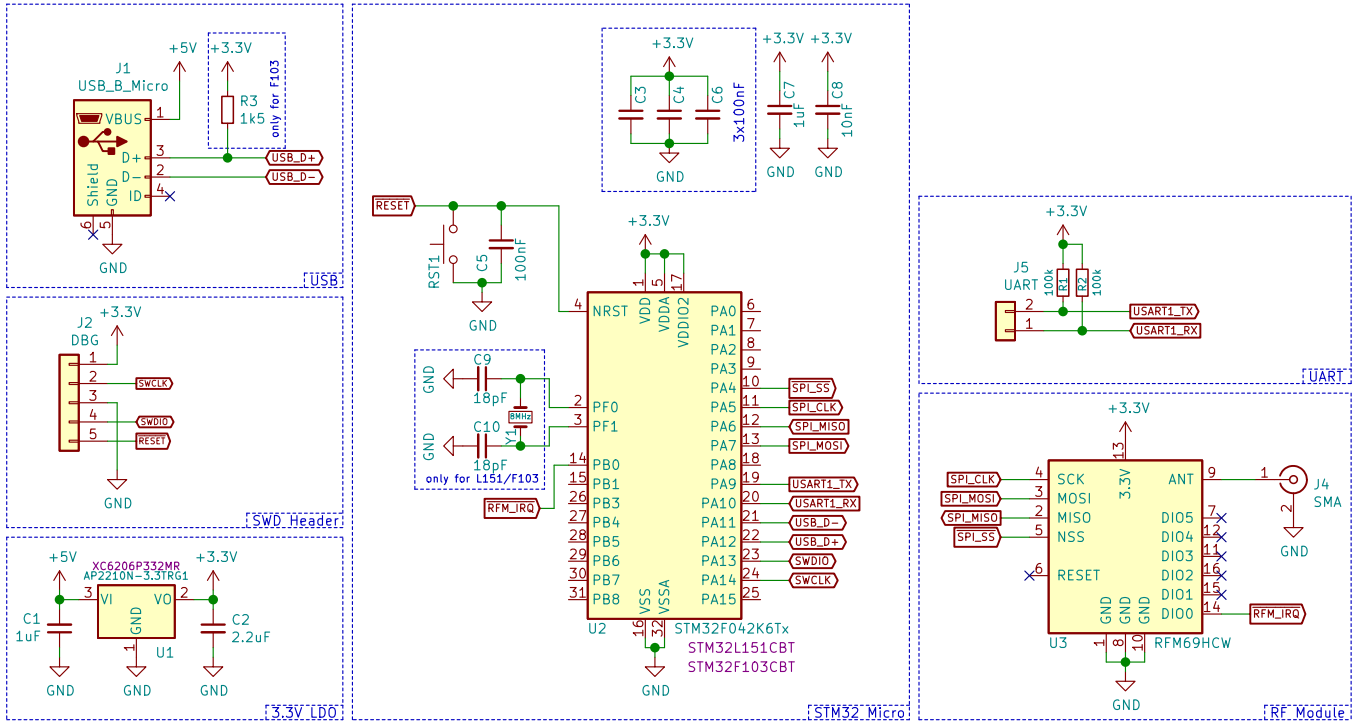

Sheet: /
File: rfm2usb.sch

Title: Rfm2USB

Size: A4	Date: 2021-02-16	**Rev: 1.0.0**
KiCad E.D.A. eeschema 5.1.9+dfsg1-1bpo10+1		Id: 1/1