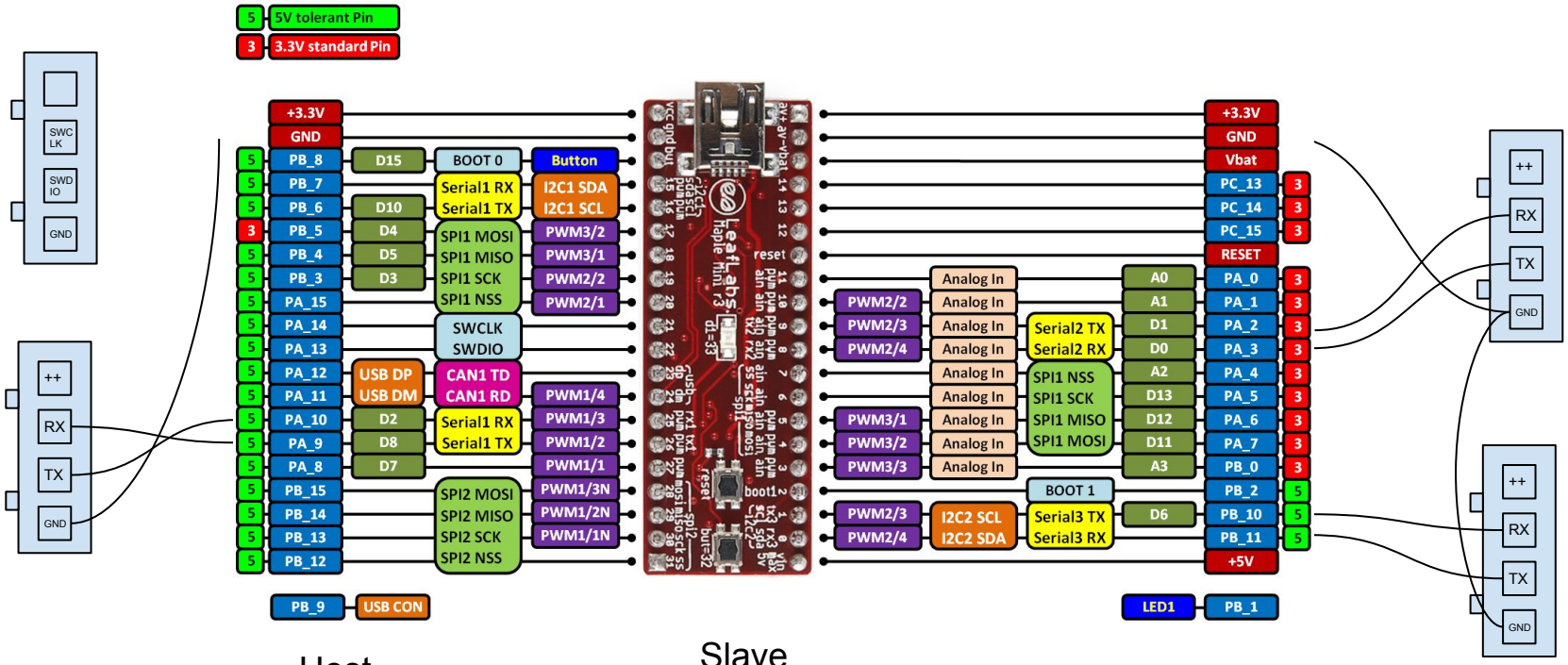

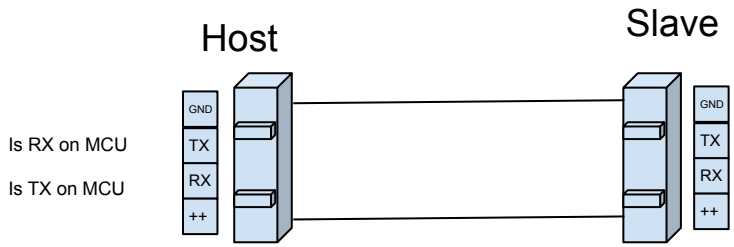

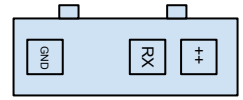

Slave side
Hole side view

SWD slave
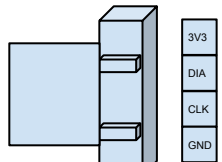
USB probe