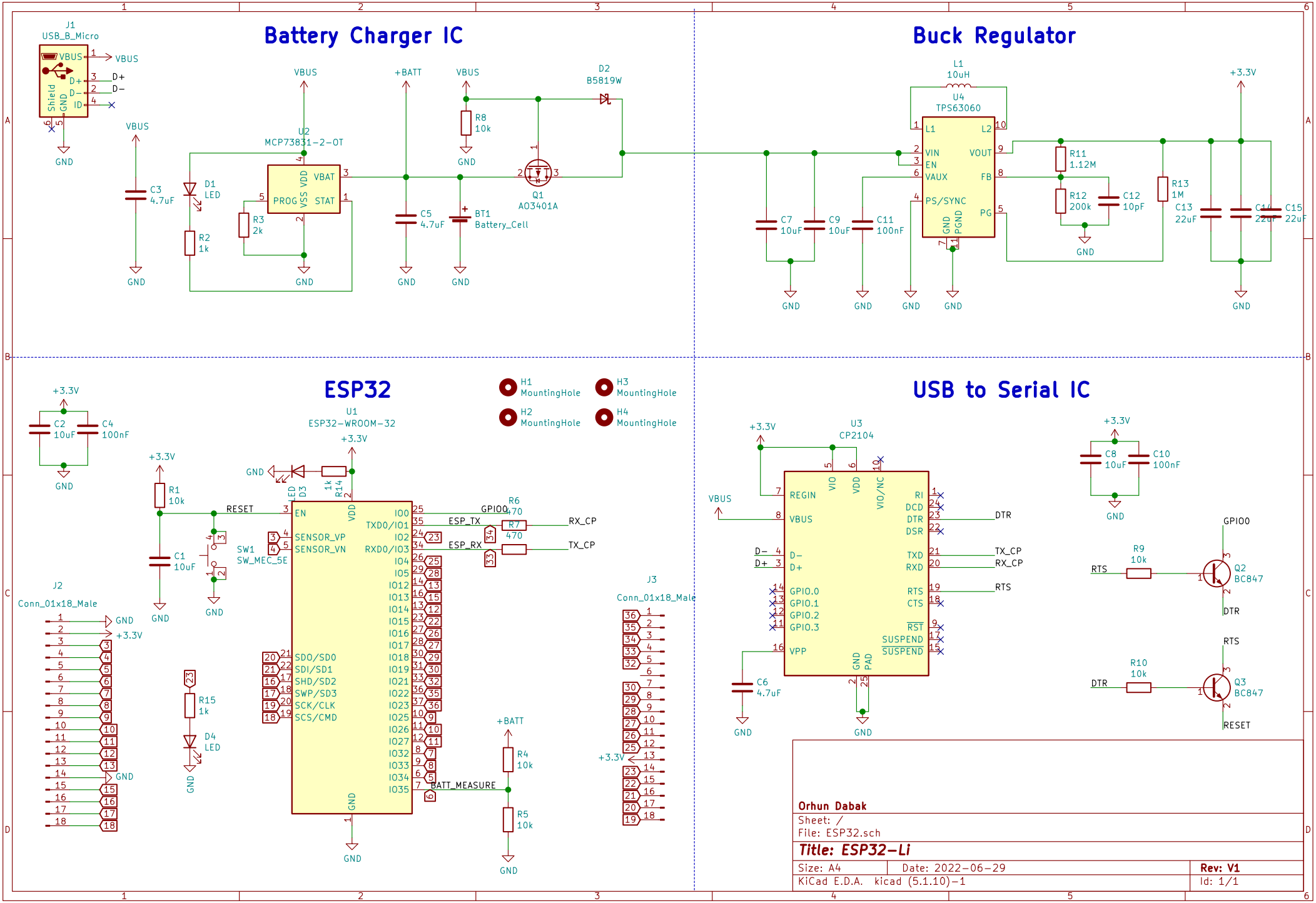
Battery Charger IC
Buck Regulator
ESP32
USB to Serial IC
J1
USB_B_Micro
VBUS
D+
D−
Shield
GND
ID
U2
MCP73831-2-OT
VDD
VSS
VBAT
PROG
STAT
C3
4.7uF
D1
LED
R2
1k
R3
2k
C5
4.7uF
BT1
Battery_Cell
+BATT
R8
10k
D2
B5819W
Q1
AO3401A
L1
10uH
U4
TPS63060
VIN
EN
VAUX
PS/SYNC
VOUT
FB
PG
PGND
C7
10uF
C9
10uF
C11
100nF
R11
1.12M
R12
200k
C12
10pF
R13
1M
C13
22uF
C14
22uF
C15
22uF
+3.3V
C2
10uF
C4
100nF
R1
10k
C1
10uF
SW1
SW_MEC_5E
RESET
U1
ESP32-WROOM-32
EN
SENSOR_VP
SENSOR_VN
IO0
TXD0/IO1
IO2
RXD0/IO3
SDO/SD0
SDI/SD1
SHD/SD2
SWP/SD3
SCK/CLK
SCS/CMD
GPIO0
ESP_TX
ESP_RX
R6
470
R7
470
RX_CP
TX_CP
R14
1k
D3
LED
R15
1k
D4
LED
R4
10k
R5
10k
BATT_MEASURE
H1
MountingHole
H2
MountingHole
H3
MountingHole
H4
MountingHole
J2
Conn_01x18_Male
J3
Conn_01x18_Male
U3
CP2104
REGIN
VBUS
D−
D+
GPIO.0
GPIO.1
GPIO.2
GPIO.3
VPP
VIO
VDD
VIO/NC
RI
DCD
DTR
DSR
TXD
RXD
RTS
CTS
RST
SUSPEND
SUSPEND
GND
PAD
C6
4.7uF
C8
10uF
C10
100nF
R9
10k
R10
10k
Q2
BC847
Q3
BC847
Orhun Dabak
Sheet: /
File: ESP32.sch
Title: ESP32-Li
Size: A4
Date: 2022-06-29
Rev: V1
KiCad E.D.A. kicad (5.1.10)-1
Id: 1/1