NOTES (UNLESS OTHERWISE SPECIFIED):

1. MATERIAL SPECIFICATIONS:
   1. MATERIAL: NYLON 12 (PA12)
2. COSMETIC SPECIFICATIONS:
   1. FINISH: MEDIA BLAST
   2. COLOR: BLACK
3. MECHANICAL SPECIFICATIONS:
   1. BREAK AND DEBURR ALL SHARP CORNERS AND EDGES.
4. GENERAL SPECIFICATIONS:
   1. THIS IS A PARTIALLY DIMENSIONED DRAWING. NON-EXPLICIT DIMENSIONS ARE REFERENCED FROM 3D MODEL.
   2. ALL DIMENSIONS ARE RELATED TO DATUM A (PRIMARY), DATUM B (SECONDARY), DATUM C (TERTIARY).
   3. INTERPRET DRAWING PER ASME Y14.5.
   4. GENERAL TOLERANCES UNLESS OTHERWISE SPECIFIED:

DIMENSION (mm)	+/-
0 - UP TO 6:	0.05
OVER 6 - UP TO 30:	0.1
OVER 30 - UP TO 120:	0.15
OVER 120 - UP TO 400:	0.2
OVER 400 - UP TO 1000:	0.3
OVER 1000 - UP TO 2000:	0.5
> 2000:	1.0

REVISIONS

REV.	DESCRIPTION	CR #	DATE	SUBMITTED BY
X01	INITIAL RELEASE	N/A	9/19/2024	AU

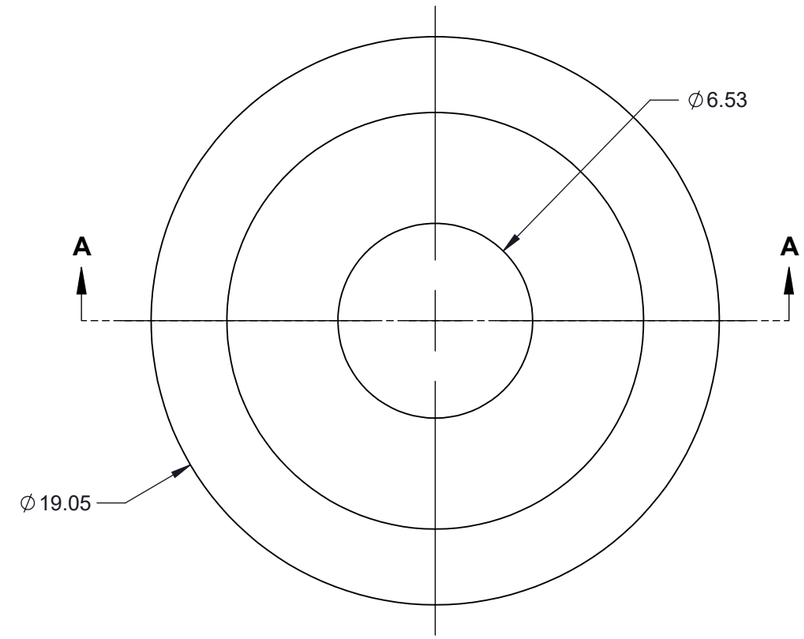

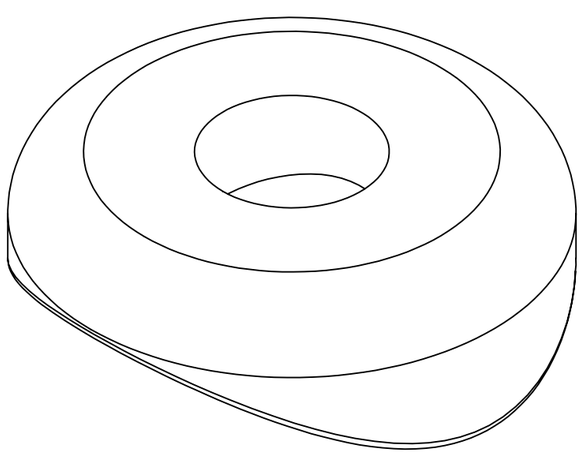

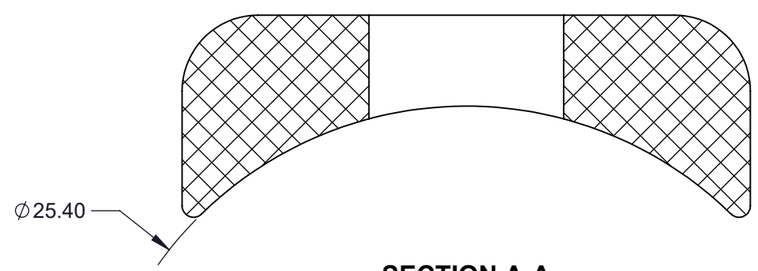

SECTION A-A

UNLESS OTHERWISE SPECIFIED
DIMENSIONS ARE IN MILLIMETERS
DO NOT SCALE DRAWING
TOLERANCES: SEE NOTES
THIRD ANGLE PROJECTION

NOVO CONFIDENTIAL
DO NOT DISTRIBUTE

NOVO ENGINEERING®
San Diego, CA | Minneapolis, MN | novoengineering.com

DESCRIPTION: WASHER, SADDLE

MATERIAL	ENG	SIZE	DWG. NO.	REV.
NYLON 6/6 PLASTIC	A. UBACH	B	VX~02-10016	X01

DRAWN: A. UBACH

FINISH	CAD FILE	SCALE	SHEET
SEE NOTES	VX~02-10016	5:1	1 OF 1