NOTES (UNLESS SPECIFIED OTHERWISE):

1.0 DESCRIPTION AND APPLICATION:
1.1 INJECTION MOLDED OR CNC MACHINED PART TO BE USED IN A COMMERCIAL PRODUCT (INDOOR USE).

2.0 APPLICABLE DOCUMENTATION:
2.1 INTERPRET DRAWING PER ASME Y14.5-2009 DIMENSIONING AND TOLERANCING STANDARDS.

3.0 MECHANICAL REQUIREMENTS:
3.1 DIMENSIONS ARE IN MILLIMETERS (MAXIMUM MATERIAL CONDITION), UNLESS OTHERWISE SPECIFIED:
(+) INDICATES "PLUS" DRAFT (DRAFT INCREASES THE SIZE OF FEATURE)
(-) INDICATES "MINUS" DRAFT (DRAFT DECREASES THE SIZE OF FEATURE)
3.2 ALL DIMENSIONS SHOWN SHALL BE CHECKED DURING FIRST ARTICLE INSPECTION.
FAI MUST BE APPROVED FOR THE SPECIFIC REVISION OF THIS PART PRIOR TO SHIPMENT OF PARTS.
3.3 FOR GEOMETRY NOT EXPLICITLY DESCRIBED IN DRAWING REFER TO 3D DATABASE.
3.4 DRAWING AND 3D DATABASE REPRESENT FINAL PART AFTER ALL POST PROCESSING, TRIMMING, MACHINING, AND FINISHING.
3.5 DIMENSIONS INDICATED BY (X.XXX) ARE PROCESS CONTROL/MONITORING DIMENSIONS.
3.6 DIMENSIONS IN PARENTHESIS "(X.XXX)" OR MARKED REFERENCE "X.XX REF" ARE DIMENSIONS WITHOUT TOLERANCE AND ARE FOR INFORMATION PURPOSE ONLY.
3.7 GENERAL TOLERANCES: FROM 0 TO 125 MM: +/-0.125 MM, PLUS +/-0.025 MM FOR EACH ADDITIONAL 25 MM.
3.8 TOLERANCE TO CENTER LINES +/- 0.125 MM.
3.9 REMOVE ALL BURRS AND BREAK SHARP EDGES.
3.10 PARTS MUST BE FREE OF ANY FOREIGN MATERIAL, INCLUDING BUT NOT LIMITED TO:
MOLD RELEASE, DIRT, CHIPS, OIL, AND OTHER CONTAMINANTS.
3.11 WEIGHTS SHOWN ON BOM ARE FOR REFERENCE ONLY.
3.12 PART TO BE MARKED WITH PART NUMBER, REVISION, MATERIAL ID, AND CAVITY NUMBER APPROXIMATELY WHERE SHOWN.
3.12.1 INJECTION MOLDED PARTS: TEXT SHALL BE MOLDED IN AND SHALL BE 3 MM TALL AND RAISED 0.125 TO 0.25 MM.
3.12.2 CNC MACHINED PARTS: TEXT SHALL BE PRINTED OR LASER ETCHED AND SHALL BE 3 MM TALL.
3.13 PART TO BE MARKED WITH DATE CODE APPROXIMATELY WHERE SHOWN. MARKING TO INDICATE YEAR AND MONTH OF PART FABRICATION.
CHANGING THE YEAR/MONTH INDICATORS ARE THE VENDOR'S RESPONSIBILITY.
3.13.1 INJECTION MOLDED PARTS: DATE CODE SHALL BE MOLDED IN AND SHALL BE 5 TO 10 MM DIAMETER MINIMUM AND RECESSED 0.25 MM MAX.
YEAR AND MONTH CODE INDICATORS SHALL BE EASILY REPLACEABLE WHILE MOLD IS INSTALLED ON INJECTION MACHINE.
3.13.2 CNC MACHINED PARTS: DATE CODE SHALL BE PRINTED OR LASER ETCHED AND TEXT SHALL BE 5 MM TALL MINIMUM.
3.14 ADDITIONAL MECHANICAL REQUIREMENTS FOR INJECTION MOLDING PROCESSES ONLY:
3.14.1 FILLETS AND RADII SHALL BE 0.175 MM UNLESS OTHERWISE SPECIFIED.
3.14.2 PARTING LINE MISMATCH NOT TO EXCEED 0.075 MM.
3.14.3 GATE REMNANT TO BE +0.00/-0.125 MM.
3.14.4 FLASH NOT TO EXCEED 0.075 MM ON ALL HOLES & SLOTS, NOT TO EXCEED 0.125 MM ELSEWHERE.
3.14.5 EJECTION PIN AND SLEEVE MARKS TO BE FLUSH WITH SURFACE OR RECESSED UP TO 0.25 MM.
3.14.6 ALL DIMENSIONS APPLY AFTER FINISHING AND PLATING.
3.14.7 PART MUST BE FREE OF DEFECTS, INCLUDING BUT NOT LIMITED TO: SINK, COLD FLOW MARKS, BURNS, GAS, SPLAY, SHORTS, BLACK SPECS AND/OR STREAKING, CONTAMINATION, AND OTHER OBJECTIONABLE DEFECTS.

4.0 TOOLING REQUIREMENTS:
4.1 TOOL/MOLD DESIGN, INCLUDING GATE AND EJECTOR PIN LOCATIONS, MUST BE APPROVED BY PUMP STUDIOS AND/OR VOTINGWORKS PRIOR TO CONSTRUCTION OF TOOL. COMPREHENSIVE TOOLING DRAWINGS WITH ALL MATERIAL SPECIFIED FOR EACH PART MUST BE SUBMITTED TO PUMP STUDIOS AND/OR VOTINGWORKS FOR APPROVAL.
4.2 FOR MULTI-CAVITY MOLDS, PARTS FROM EACH CAVITY MUST HAVE A DISTINGUISHING NUMBER.
4.3 TOOL/MOLD TO BE PROPERTY OF VOTINGWORKS AND TO BE PERMANENTLY MARKED WITH COMPANY NAME, PART NUMBER, PART NAME, CAVITY ID, MOLD SHRINKAGE, ASSET TAG, AND MOLD WEIGHT.

5.0 INSPECTION & SHIPPING REQUIREMENTS:
5.1 VERIFY PART SAMPLES CONFORM TO DESIGN REQUIREMENTS USING STANDARD TEST EQUIPMENT AND VISUAL INSPECTION TECHNIQUES.
5.2 PACKAGING FOR SHIPMENT: PART SHALL BE ADEQUATELY PROTECTED TO PREVENT DAMAGE IN TRANSIT AND HANDLING.
5.3 VENDOR TO SUPPLY WITH EACH SHIPMENT: MATERIAL CERTIFICATION, SHIPPER DOCUMENTS WITH PART NUMBER, PART NAME, REVISION, LOT NUMBER, QUANTITY AND P.O. NUMBER.
5.4 PACKAGING LABELS AND MATERIAL TRACEABILITY MUST CONFORM TO UL 746D.

6.0 MATERIAL REQUIREMENTS:
6.1 MATERIAL: MAKROLON 2405 POLYCARBONATE, OR EQUIVALENT. FINAL MATERIAL TO BE APPROVED BY PUMP STUDIOS AND/OR VOTINGWORKS.
6.2 COLOR: PURPLE (PANTONE 2090 C) OR APPROVED EQUIVALENT.
6.3 VENDOR TO SUBMIT MSDS AND MATERIAL SPECIFICATIONS FOR APPROVAL BY PUMP STUDIOS AND/OR VOTINGWORKS PRIOR TO MANUFACTURING FIRST ARTICLE PARTS.
6.4 VENDOR TO SUBMIT COLOR SAMPLES TO PUMP STUDIOS AND/OR VOTINGWORKS FOR APPROVAL PRIOR TO TEXTURING/POLISHING THE MOLD(S).
6.5 NO CHANGES SHALL BE ALLOWED ON PRODUCTION MATERIAL, REGARDLESS OF WHETHER SUCH CHANGE AFFECTS CHARACTERISTICS, WITHOUT PRIOR EXPLICIT APPROVAL BY PUMP STUDIOS AND/OR VOTINGWORKS.

7.0 ADDITIONAL FINISH REQUIREMENTS FOR INJECTION MOLDING PROCESSES ONLY:
7.1 SURFACES IN GREY ARE NON-COSMETIC AND SHALL HAVE A SPI-C3 FINISH MINIMUM OR APPROVED EQUIVALENT.
7.2 SURFACES IN GREEN ARE COSMETIC AND SHALL HAVE A MT-11010 FINISH MINIMUM OR APPROVED EQUIVALENT.
7.3 VENDOR TO SUBMIT TEXTURED COLOR SAMPLES TO PUMP STUDIOS AND/OR VOTINGWORKS FOR APPROVAL PRIOR TO MOLDING PRODUCTION PARTS.

8.0 APPROVALS:
8.1 SUPPLIER IS RESPONSIBLE TO ENSURE THIS PART OR ASSEMBLY IS FULLY COMPLIANT WITH THE EUROPEAN UNION (EU) RESTRICTION OF HAZARDOUS SUBSTANCES (ROHS) DIRECTIVE 2002/95/EC, LATEST REVISION, AT TIME OF SHIPMENT.
8.2 SUPPLIER WILL ALSO FURNISH A CERTIFICATION OF COMPLIANCE (C OF C) WITH FIRST ARTICLES WHEN SPECIFICALLY REQUESTED.

REVISIONS

REV.	DESCRIPTION	CR #	DATE	SUBMITTED BY
A	INITIAL RELEASE	-	10/08/2024	LM
B	ADJUSTED PIN DIAMETERS FOR FIT	-	11/14/2024	PAK

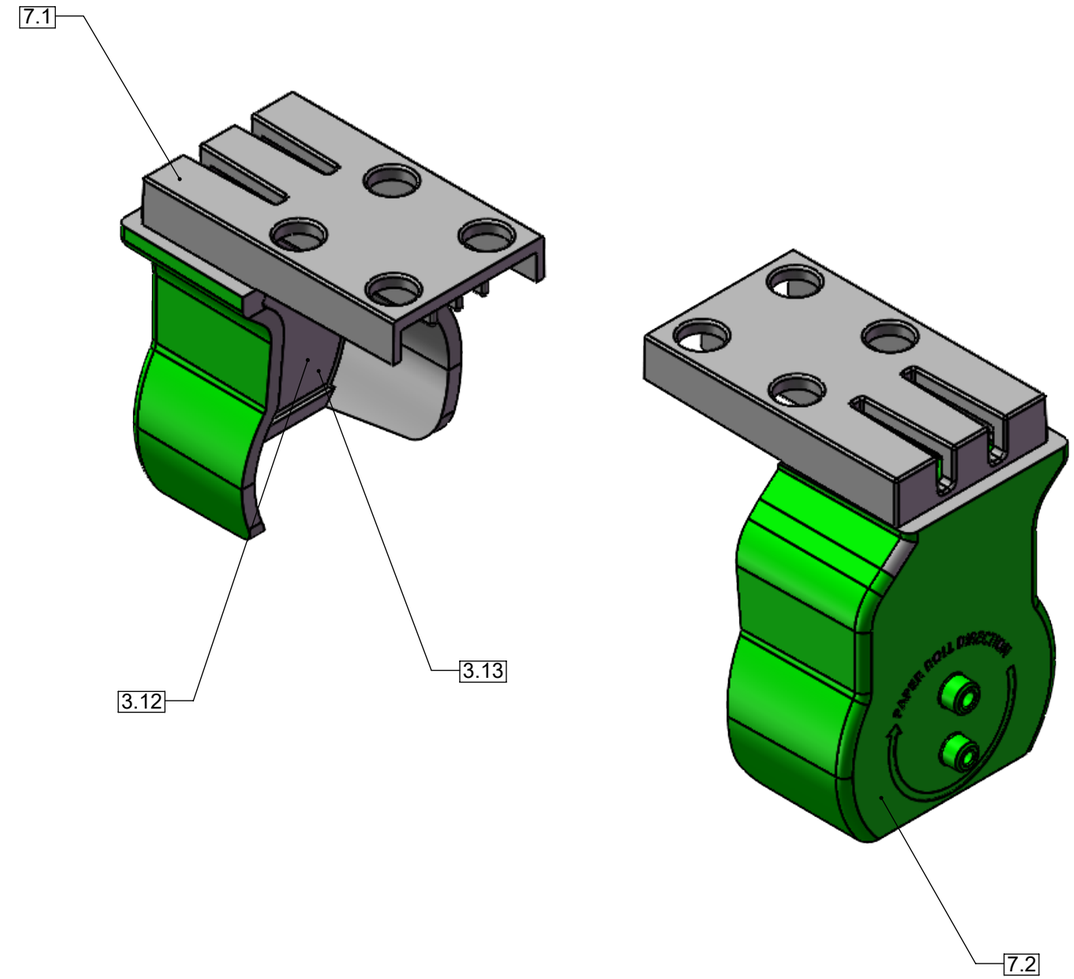

MATERIAL: SEE NOTES	UNLESS OTHERWISE SPECIFIED DIMENSIONS ARE IN MILLIMETERS DO NOT SCALE DRAWING	VotingWorks
FINISH: SEE NOTES	TOLERANCES: SEE NOTES	
COLOR: SEE NOTES	THIRD ANGLE PROJECTION	DESCRIPTION: PAPER ROLL HOLDER, LEFT
EST. WEIGHT: 31.11	APPROVED BY: PAK	
ENGINEER: DBC	APPROVED DATE: 11/14/2024	PART NUMBER: VX~02-00042 — REV. B
RELEASE DATE: 10/31/2024	CAD TYPE: MANUFACTURED PART	SIZE: B — SCALE: 1:1 — SHEET: 1 OF 2

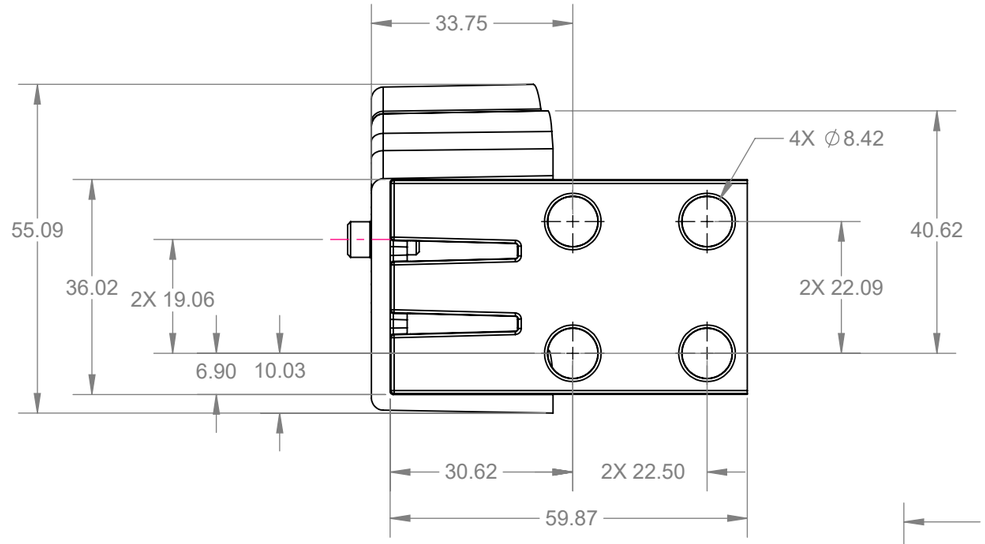

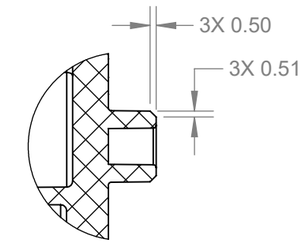

DETAIL B
SCALE 2 : 1

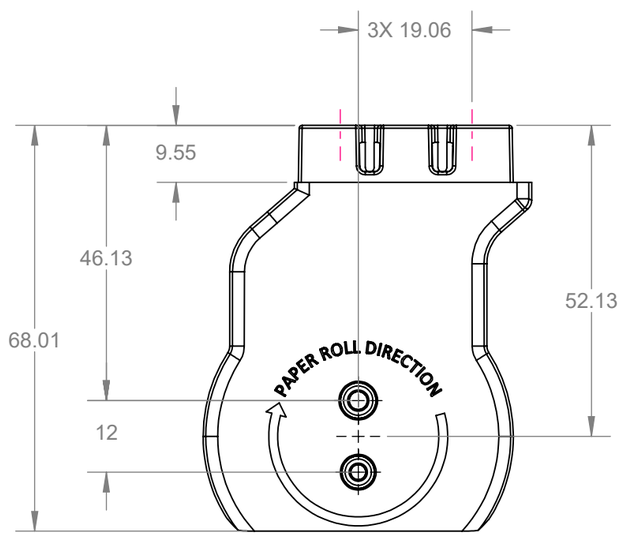

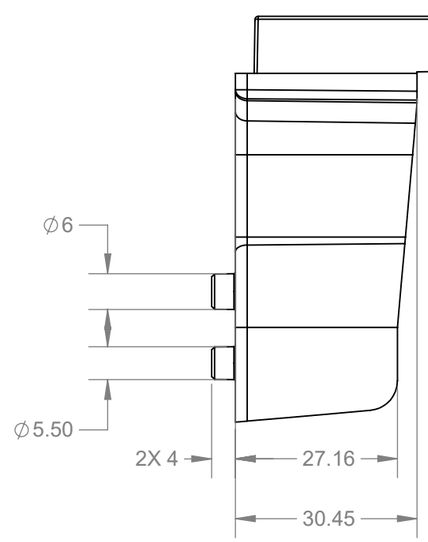

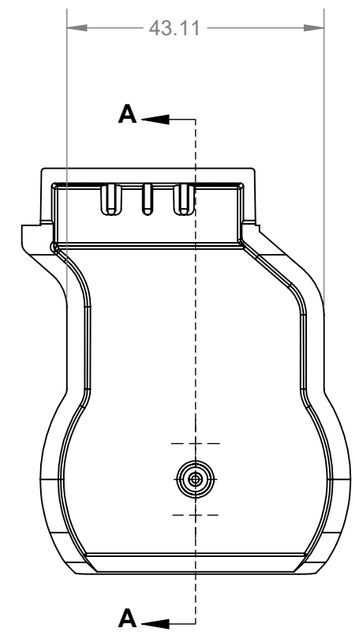

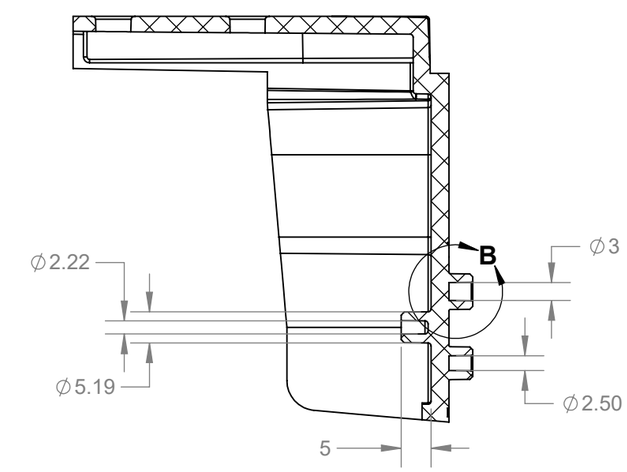

SECTION A-A

MATERIAL SEE NOTES	UNLESS OTHERWISE SPECIFIED DIMENSIONS ARE IN MILLIMETERS DO NOT SCALE DRAWING	VotingWorks
FINISH SEE NOTES	TOLERANCES: SEE NOTES	
COLOR SEE NOTES	THIRD ANGLE PROJECTION	DESCRIPTION PAPER ROLL HOLDER, LEFT
EST. WEIGHT 31.11	APPROVED BY PAK	
ENGINEER DBC	APPROVED DATE 11/14/2024	PART NUMBER VX~02-00042 — REV. B
RELEASE DATE 10/31/2024	CAD TYPE MANUFACTURED PART	SIZE B — SCALE 1:1 — SHEET 2 OF 2