REVISIONS				
REV.	DESCRIPTION	CR #	DATE	SUBMITTED BY
A	INITIAL RELEASE	-	10/03/2024	GJK

NOTES (UNLESS SPECIFIED OTHERWISE):

1.0 DESCRIPTION AND APPLICATION:
1.1 SHEET METAL PART TO BE USED IN A COMMERCIAL PRODUCT (INDOOR USE).

2.0 APPLICABLE DOCUMENTATION:
2.1 INTERPRET DRAWING PER ASME Y14.5-2009 DIMENSIONING AND TOLERANCING STANDARDS.

3.0 MECHANICAL REQUIREMENTS:
3.1 DIMENSIONS ARE IN MILLIMETERS (MAXIMUM MATERIAL CONDITION)
3.2 ALL DIMENSIONS SHOWN SHALL BE CHECKED DURING FIRST ARTICLE INSPECTION. FAI MUST BE APPROVED FOR THE SPECIFIC REVISION OF THIS PART PRIOR TO SHIPMENT OF PARTS.
3.3 FOR GEOMETRY NOT EXPLICITLY DESCRIBED IN DRAWING REFER TO 3D DATABASE.
3.4 DRAWING AND 3D DATABASE REPRESENT FINAL PART AFTER ALL POST PROCESSING, TRIMMING, MACHINING, AND FINISHING.
3.5 DIMENSIONS INDICATED BY (X.XXX) ARE PROCESS CONTROL/MONITORING DIMENSIONS.
3.6 DIMENSIONS IN PARENTHESIS "(X.XXX)" OR MARKED REFERENCE "X.XX REF" ARE DIMENSIONS WITHOUT TOLERANCE AND ARE FOR INFORMATION PURPOSE ONLY.
3.7 GENERAL TOLERANCES:
3.7.1 HOLE SIZE: +/-0.075 MM.
3.7.2 HOLE-TO-HOLE (ON FLAT SURFACE): +/-0.125 MM.
3.7.3 HOLE-TO-EDGE OR EDGE-TO-EDGE (ON FLAT SURFACE): +/- 0.25 MM.
3.7.4 HOLE-TO-BEND OR EDGE-TO-BEND: +/- 0.375 MM.
3.7.5 BEND-TO-BEND: +/- 0.50 MM.
3.7.6 ANGULAR TOLERANCES: +/- 1°
3.8 INSIDE AND OUTSIDE CORNER RADII TO BE 1/2 MATERIAL THICKNESS MIN. (AT LEAST 0.375 MM MIN)
3.9 USE MINIMUM BEND RADII REQUIRED TO FORM WITHOUT CRACKING OR ADDITIONAL WORK UNLESS OTHERWISE SPECIFIED.
3.10 BURR SIDE ON NON-COSMETIC SIDE OR AS INDICATED IN DRAWING.
3.11 COIN ALL EDGES TO 0.25 MM MIN.
3.12 ALL DIMENSIONS APPLY AFTER FINISHING AND PLATING.
3.13 PARTS SHALL BE FREE OF ALL FOREIGN MATERIAL, INCLUDING BUT NOT LIMITED TO: GREASE, DIRT, CHIPS, OIL, AND OTHER CONTAMINANTS.
3.14 PART TO BE LASER ETCHED WITH PART NUMBER, REVISION, AND MATERIAL ID APPROXIMATELY WHERE SHOWN. TEXT SHALL BE 3 MM TALL.
3.15 PART TO BE LASER ETCHED WITH DATE CODE APPROXIMATELY WHERE SHOWN. MARKING TO INDICATE YEAR AND MONTH OF PART FABRICATION. CHANGING THE YEAR/MONTH INDICATORS ARE THE VENDOR'S RESPONSIBILITY. TEXT SHALL BE 5 MM TALL MINIMUM.

4.0 TOOLING REQUIREMENTS:
4.1 TOOL DESIGN, IF TOOLING IS REQUIRED, MUST BE APPROVED BY PUMP STUDIOS AND/OR VOTINGWORKS PRIOR TO CONSTRUCTION OF TOOL. COMPREHENSIVE TOOLING DRAWINGS WITH ALL MATERIAL SPECIFIED FOR EACH PART MUST BE SUBMITTED TO PUMP STUDIOS AND/OR VOTINGWORKS FOR APPROVAL.
4.2 TOOL TO BE PROPERTY OF VOTINGWORKS AND TO BE PERMANENTLY MARKED WITH COMPANY NAME, PART NUMBER, PART NAME, ASSET TAG, AND MOLD WEIGHT.
4.3 KNOCKOUTS CAN BE LASER CUT OR PUNCHED AS PER VENDOR CAPABILITIES. CHANGES IN TOLERANCE SHOULD BE APPROVED BY PUMP STUDIOS AND/OR VOTINGWORKS.

5.0 INSPECTION & SHIPPING REQUIREMENTS:
5.1 VERIFY PART SAMPLES CONFORM TO DESIGN REQUIREMENTS USING STANDARD TEST EQUIPMENT AND VISUAL INSPECTION TECHNIQUES.
5.2 PACKAGING FOR SHIPMENT: PART SHALL BE ADEQUATELY PROTECTED TO PREVENT DAMAGE IN TRANSIT AND HANDLING.
5.3 VENDOR TO SUPPLY WITH EACH SHIPMENT: MATERIAL CERTIFICATION, SHIPPER DOCUMENTS WITH PART NUMBER, PART NAME, REVISION, LOT NUMBER, QUANTITY AND P.O. NUMBER.
5.4 PACKAGING LABELS AND MATERIAL TRACEABILITY MUST CONFORM TO UL 746D.

6.0 MATERIAL REQUIREMENTS:
6.1 MATERIAL: 5052-H32
6.2 THICKNESS: 1.52 MM [0.06 IN]
6.3 VENDOR TO SUBMIT MSDS AND MATERIAL SPECIFICATIONS FOR APPROVAL BY PUMP STUDIOS AND/OR VOTINGWORKS PRIOR TO STAMPING/BENDING/FORMING FIRST ARTICLE PARTS.
6.4 NO CHANGES SHALL BE ALLOWED ON PRODUCTION MATERIAL, REGARDLESS OF WHETHER SUCH CHANGE AFFECTS CHARACTERISTICS, WITHOUT PRIOR EXPLICIT APPROVAL BY PUMP STUDIOS AND/OR VOTINGWORKS.

7.0 FINISH REQUIREMENTS:
7.1 PARTS TO BE DEBURRED TO REMOVE SHARP EDGES.
7.2 PARTS SHALL BE CLEAR CHROMATE COATED PRIOR TO HARDWARE INSTALLATION.
7.3 VENDOR TO SUBMIT FINISHED COLOR SAMPLES TO PUMP STUDIOS AND/OR VOTINGWORKS FOR APPROVAL PRIOR TO PRODUCTION PARTS.

8.0 APPROVALS:
8.1 SUPPLIER IS RESPONSIBLE TO ENSURE THIS PART OR ASSEMBLY IS FULLY COMPLIANT WITH THE EUROPEAN UNION (EU) RESTRICTION OF HAZARDOUS SUBSTANCES (ROHS) DIRECTIVE 2002/95/EC, LATEST REVISION, AT TIME OF SHIPMENT.
8.2 SUPPLIER WILL ALSO FURNISH A CERTIFICATION OF COMPLIANCE (C OF C) WITH FIRST ARTICLES WHEN SPECIFICALLY REQUESTED.

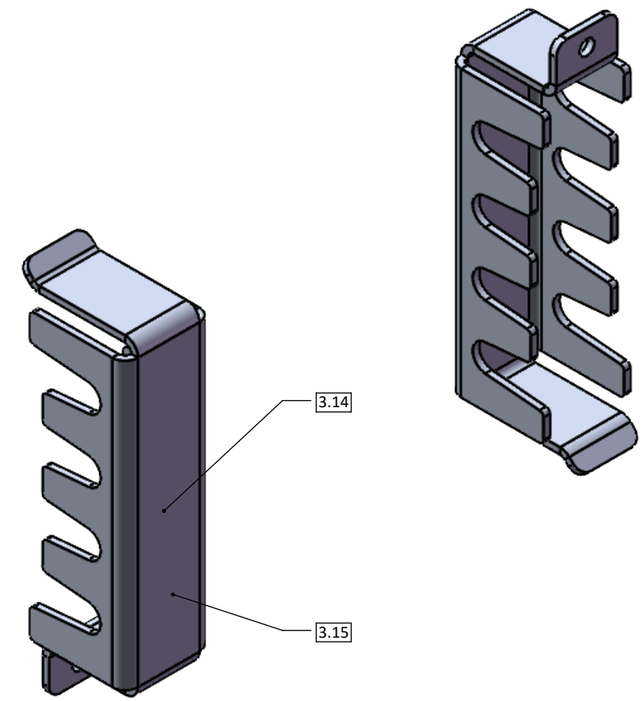

MATERIAL: 5052-H32	UNLESS OTHERWISE SPECIFIED DIMENSIONS ARE IN MILLIMETERS DO NOT SCALE DRAWING	VotingWorks
FINISH: SEE NOTES	TOLERANCES: SEE NOTES	
COLOR: SEE NOTES	THIRD ANGLE PROJECTION	DESCRIPTION: RETENTION BRACKET, USB CABLE
EST. WEIGHT: 15.88	APPROVED BY: EER	
ENGINEER: GJK	APPROVED DATE: 11/15/2024	PART NUMBER: VX~02-00022 — REV.: A
RELEASE DATE: 10/31/2024	CAD TYPE: MANUFACTURED PART	SIZE: B — SCALE: 1:1 — SHEET: 1 OF 2

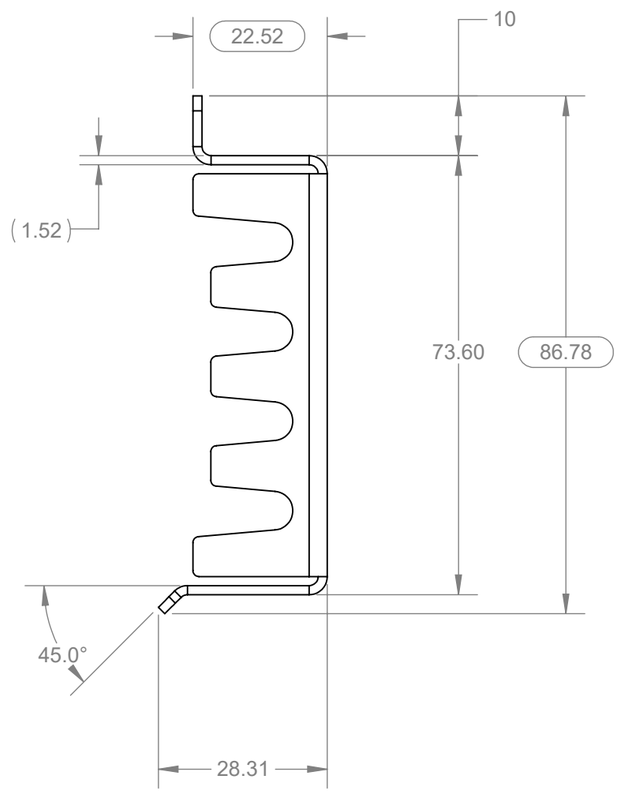

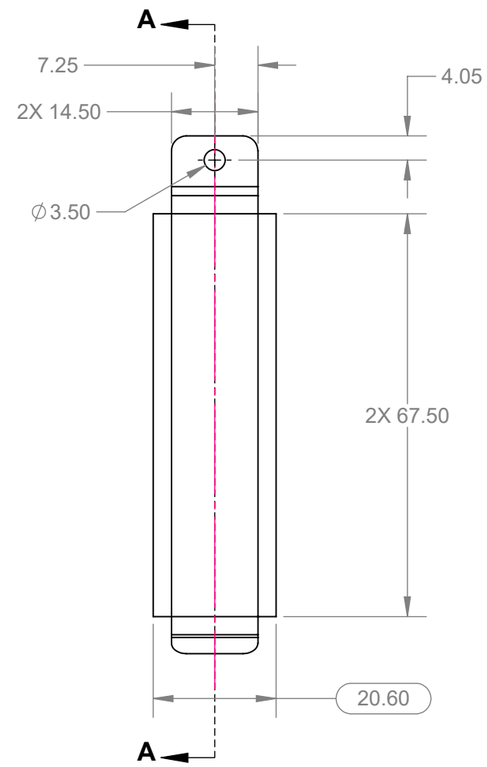

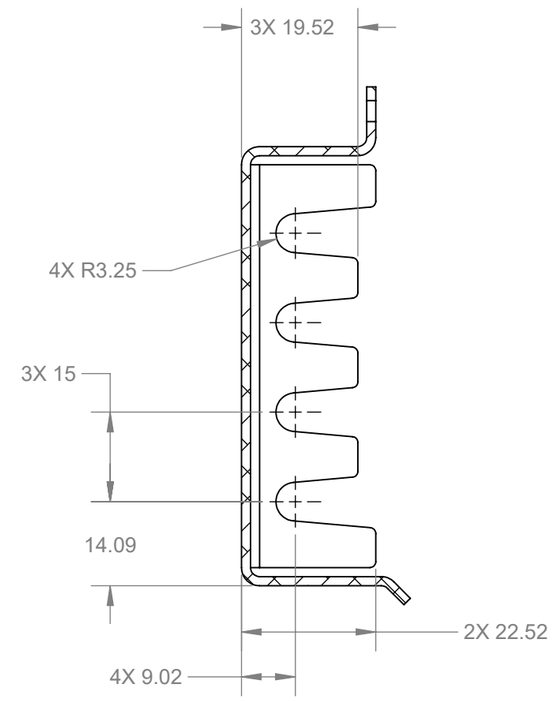

SECTION A-A
OCCURS 2X

MATERIAL: 5052-H32	UNLESS OTHERWISE SPECIFIED DIMENSIONS ARE IN MILLIMETERS DO NOT SCALE DRAWING	VotingWorks
FINISH: SEE NOTES	TOLERANCES: SEE NOTES	
COLOR: SEE NOTES	THIRD ANGLE PROJECTION	DESCRIPTION: RETENTION BRACKET, USB CABLE
EST. WEIGHT: 15.88	APPROVED BY: EER	
ENGINEER: GJK	APPROVED DATE: 11/15/2024	PART NUMBER: VX~02-00022 — REV. A
RELEASE DATE: 10/31/2024	CAD TYPE: MANUFACTURED PART	SIZE: B — SCALE: 1:1 — SHEET: 2 OF 2