NOTES (UNLESS SPECIFIED OTHERWISE):

1.0 DESCRIPTION AND APPLICATION:
1.1 ASSEMBLY TO BE USED IN A COMMERCIAL PRODUCT (INDOOR USE).

2.0 APPLICABLE DOCUMENTATION:
2.1 INTERPRET DRAWING PER ASME Y14.5-2009 DIMENSIONING AND TOLERANCING STANDARDS.

3.0 REQUIREMENTS:
3.1 DIMENSIONS ARE IN MILLIMETERS (MAXIMUM MATERIAL CONDITION)
3.2 IF PROVIDED, ALL DIMENSIONS SHOWN SHALL BE CHECKED DURING FIRST ARTICLE INSPECTION. FAI MUST BE APPROVED FOR THE SPECIFIC REVISION OF THIS ASSEMBLY PRIOR TO SHIPMENT OF PARTS.
3.3 DIMENSIONS INDICATED BY (X.XXX) ARE PROCESS CONTROL/MONITORING DIMENSIONS.
3.4 DIMENSIONS IN PARENTHESIS "(X.XXX)" OR MARKED REFERENCE "X.XX REF" ARE DIMENSIONS WITHOUT TOLERANCE AND ARE FOR INFORMATION PURPOSE ONLY.
3.5 UNLESS OTHERWISE NOTED GENERAL TOLERANCES: +/-.125 MM
3.6 PARTS MUST BE FREE OF ANY FOREIGN MATERIAL, INCLUDING BUT NOT LIMITED TO: DIRT, CHIPS, OIL, AND OTHER CONTAMINANTS.
3.7 NO CHANGES SHALL BE ALLOWED, REGARDLESS OF WHETHER SUCH CHANGE AFFECTS CHARACTERISTICS, WITHOUT PRIOR EXPLICIT APPROVAL BY PUMP STUDIOS AND/OR VOTINGWORKS.

4.0 INSPECTION & SHIPPING REQUIREMENTS:
4.1 VERIFY PART SAMPLES CONFORM TO DESIGN REQUIREMENTS USING STANDARD TEST EQUIPMENT AND VISUAL INSPECTION TECHNIQUES.
4.2 PACKAGING FOR SHIPMENT: PART SHALL BE ADEQUATELY PROTECTED TO PREVENT DAMAGE IN TRANSIT AND HANDLING.
4.3 VENDOR TO SUPPLY WITH EACH SHIPMENT: MATERIAL CERTIFICATION, SHIPPER DOCUMENTS WITH PART NUMBER, PART NAME, REVISION, LOT NUMBER, QUANTITY AND P.O. NUMBER.
4.4 PACKAGING LABELS AND MATERIAL TRACEABILITY MUST CONFORM TO UL 746D.

5.0 APPROVALS:
5.1 SUPPLIER IS RESPONSIBLE TO ENSURE THIS PART OR ASSEMBLY IS FULLY COMPLIANT WITH THE EUROPEAN UNION (EU) RESTRICTION OF HAZARDOUS SUBSTANCES (ROHS) DIRECTIVE 2002/95/EC, LATEST REVISION, AT TIME OF SHIPMENT.
5.2 SUPPLIER WILL FURNISH A CERTIFICATION OF COMPLIANCE (C OF C) WITH FIRST ARTICLES WHEN SPECIFICALLY REQUESTED.

REVISIONS

REV.	DESCRIPTION	CR #	DATE	SUBMITTED BY
A	INITIAL RELEASE	-	10/03/2024	L.ESCOBAR
B	UPDATED BOM TO INCLUDE VX~02-00022 REMOVED THREAD-LOCKER NOTE	-	7/22/2025	D.CHU
C	ADDED PAT + AUDIO CABLES TO BOM	230, 231	3/31/2026	JDEWALD

ITEM NO.	QTY.	PART NUMBER	DESCRIPTION
28	1	USBFIREWIRE~RR-ARBR-06GR	USB 3 RIGHT A TO RIGHT B - 6IN
27	1	MYCABLEMART~FE-3MMPM-01MF	1.5FT 3.5mm MINI-STEREO TRS MALE TO FEMALE PANEL-MOUNT EXTENSION CABLE
26	1	MY-CABLE-MART~FE-ADT-143	3.5mm RIGHT ANGLE ADAPTER, MALE/FEMALE STEREO TRS (3 CONNECTOR)
25	1	VX~02-00078	CABLE, PRINTER POWER, 24V
24	1	VX~02-00076	NEUTRAL, DAISY CHAIN
23	1	VX~02-00075	CABLE, HOT DAISY CHAIN
22	1	VX~02-00074	CABLE, GROUND DAISY CHAIN
21	1	VX~02-00072	CABLE, POWER SUPPLY GROUND
20	1	VX~02-00071	CABLE, LID GROUND STRAP
19	1	VX~02-00070	POWER ENTRY STAGE 2, JUMPER HARNESS
18	1	GLOBTEK~USBCW1M0USBC2SLEMBK	CABLE, USB-C, STRAIGHT C, LEFT C WITH SCREW LOCK, 1.00M
17	3	ESSENTRA~WSLC-6-01	CABLE CLIP, WIRE SADLE, HINGED TOP LOCK, 3.51MM HOLE
16	2	VX~99-00120	M3X0.5PX5L, BHCS, ZINC-PLATED STEEL
15	2	VX~99-00131	WASHER, M3, ZINC-PLATED STEEL
14	2	VX~99-00111	WASHER, OVERSIZED, M3, 9MM OD, ZINC-PLATED STEEL
13	3	VX~99-00121	M3X0.5PX8L, BHCS, ZINC-PLATED STEEL
12	6	VX~99-00110	M4X0.7PX10L, SHCS, LOW-PROFILE, ZINC-PLATED STEEL
11	17	VX~99-00106	M4X0.7PX6L, SHCS, ZINC-PLATED STEEL
10	22	VX~99-00113	WASHER, M4, ZINC-PLATED STEEL
9	1	VX~02-00055	LOCKOUT, BACK
8	1	VX~01-00009	ASSEMBLY, SCANNER WITH BRACKET AND INFEED
7	1	VX~01-00010	ASSEMBLY, PRINTER WITH BRACKET AND REDIRECTOR
6	1	VX~02-00036	BALLOT REDIRECTOR, FRONT
5	1	VX~01-00008	ASSEMBLY, SBC WITH BRACKET
4	1	VX~01-00087	ASSEMBLY, SUBFRAME, USB LATCH CARD
3	1	VX~01-00004	ASSEMBLY, SUBPANEL BRACKET, RIGHT WITH 12V PSU AND PRINTER CONTROL
2	1	VX~01-00002	ASSEMBLY, SUBPANEL BRACKET, RIGHT WITH 24V PSU
1	1	VX~02-00020	SUBASSEMBLY PLATE

C

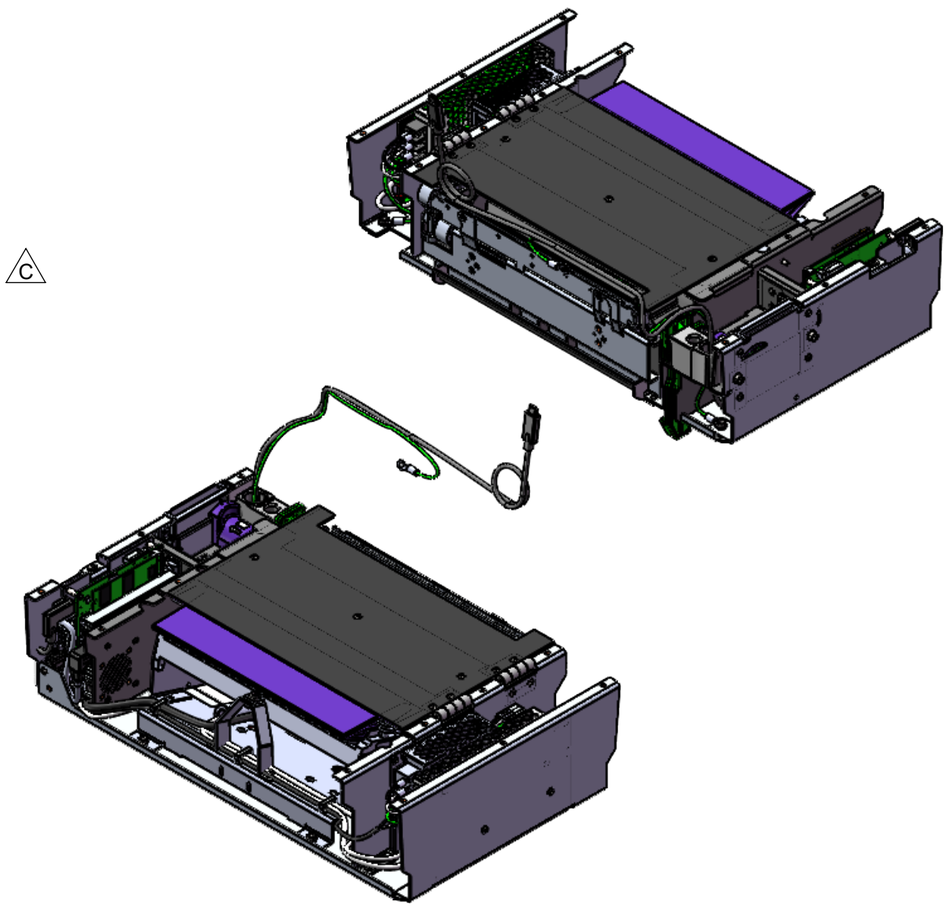

MATERIAL: N/A	UNLESS OTHERWISE SPECIFIED DIMENSIONS ARE IN MILLIMETERS DO NOT SCALE DRAWING	VotingWorks	
FINISH: NONE / AS FABRICATED	TOLERANCES: SEE NOTES		
COLOR: SEE BOM	THIRD ANGLE PROJECTION	DESCRIPTION: BOTTOM TUB SUBPLATE ASSEMBLY	
EST. WEIGHT: 2453.72	APPROVED BY: E.RUCHTE		
ENGINEER: L.ESCOBAR	APPROVED DATE: 11/18/2024	PART NUMBER: VX~01-00006	REV. C
RELEASE DATE: 10/31/2024	CAD TYPE: MULTI PART ASSEMBLY	SIZE: B / SCALE: 1:5	SHEET: 1 OF 2

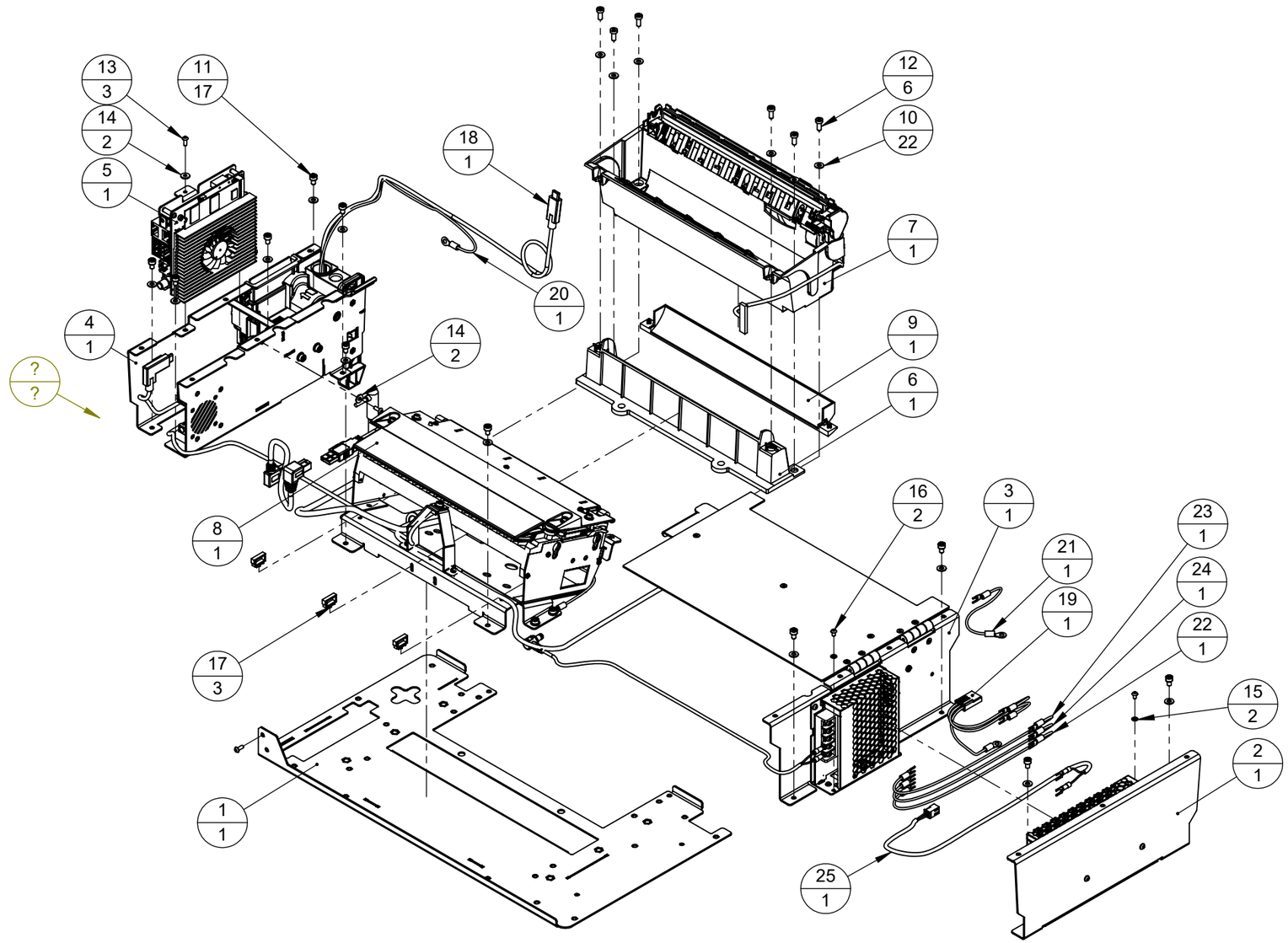

MATERIAL N/A	UNLESS OTHERWISE SPECIFIED DIMENSIONS ARE IN MILLIMETERS DO NOT SCALE DRAWING	VotingWorks
FINISH NONE / AS FABRICATED	TOLERANCES: SEE NOTES	
COLOR SEE BOM	THIRD ANGLE PROJECTION	DESCRIPTION BOTTOM TUB SUBPLATE ASSEMBLY
EST. WEIGHT 2453.72	APPROVED BY E.RUCHTE	
ENGINEER L.ESCOBAR	APPROVED DATE 11/18/2024	PART NUMBER VX~01-00006 — REV. C
RELEASE DATE 10/31/2024	CAD TYPE MULTI PART ASSEMBLY	SIZE B — SCALE 1:5 — SHEET 2 OF 2