NOTES (UNLESS OTHERWISE SPECIFIED)

1. INTERPRET PER ASME Y14.5-2009. DIMENSIONS IN mm.
2. MODEL & DRAWING REPRESENT FINISHED PART.
3. FOR GEOMETRY NOT EXPLICITLY DESCRIBED IN DRAWING REFER TO 3D DATABASE.
4. GENERAL TOLERANCES: ISO 2768-mK (SEE TABLE).
5. INSIDE CORNER RADII ≥ ½ MATL THK. BREAK SHARP EDGES 0.2–0.4 mm.
6. LASER-ETCH P/N, REV & MATL ID (3 mm H) APPROX. WHERE SHOWN.
7. INSTALL HARDWARE PER MANUFACTURER SPEC.
8. MATERIAL: 5052-H32, 1.52 mm THK PER ASTM B209.
9. FINISH: MIL-DTL-5541 TYPE II, CLASS 3, CLEAR CHROMATE. (ROHS COMPLIANT)

REVISIONS

REV.	DESCRIPTION	CR #	DATE	SUBMITTED BY
A	INITIAL RELEASE	-	10/03/2024	GJK
B	ADJUST TO IMPROVE EASE OF ASSY.	-	11/15/2024	PAK
C	ADD SLOTS; UPDATE FLANGE; ADD PEMS; REMOVE CABLE RETURN;	24, 33, 120	6/4/2025	JDEWALD
D	ADDED RELIEF FOR BULKHEAD BEND RADII	229	4/1/2026	JDEWALD

ISO 2768 GENERAL TOLERANCES (mK)	
LINEAR DIMENSIONS – ISO 2768-1, CLASS m (mm)	
NOMINAL SIZE RANGE, L (mm)	PERMISSIBLE ± (mm)
0.5 ≤ L ≤ 6	0.10
6 < L ≤ 30	0.20
30 < L ≤ 120	0.30
120 < L ≤ 400	0.50
400 < L ≤ 1000	0.80
1000 < L ≤ 2000	1.20
2000 < L ≤ 4000	2.00

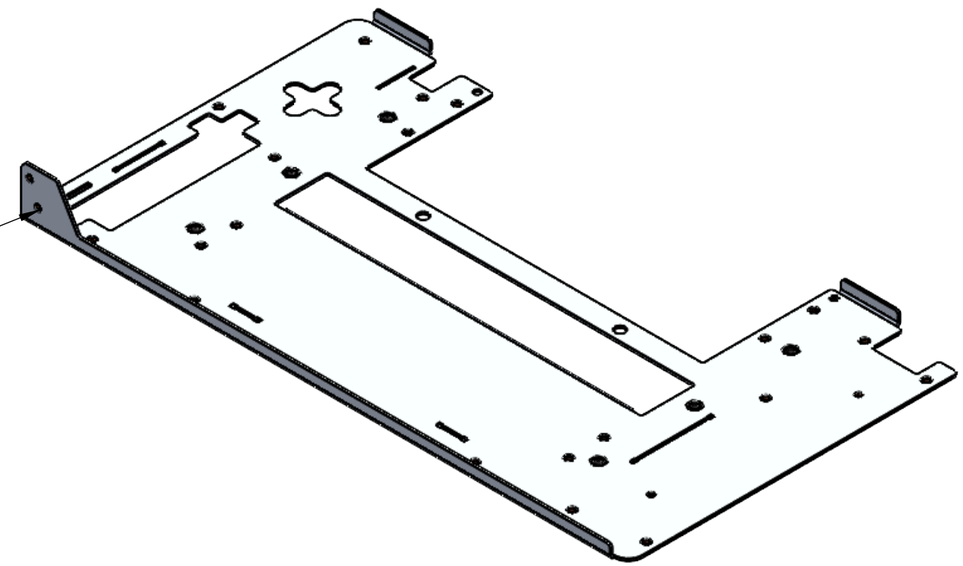

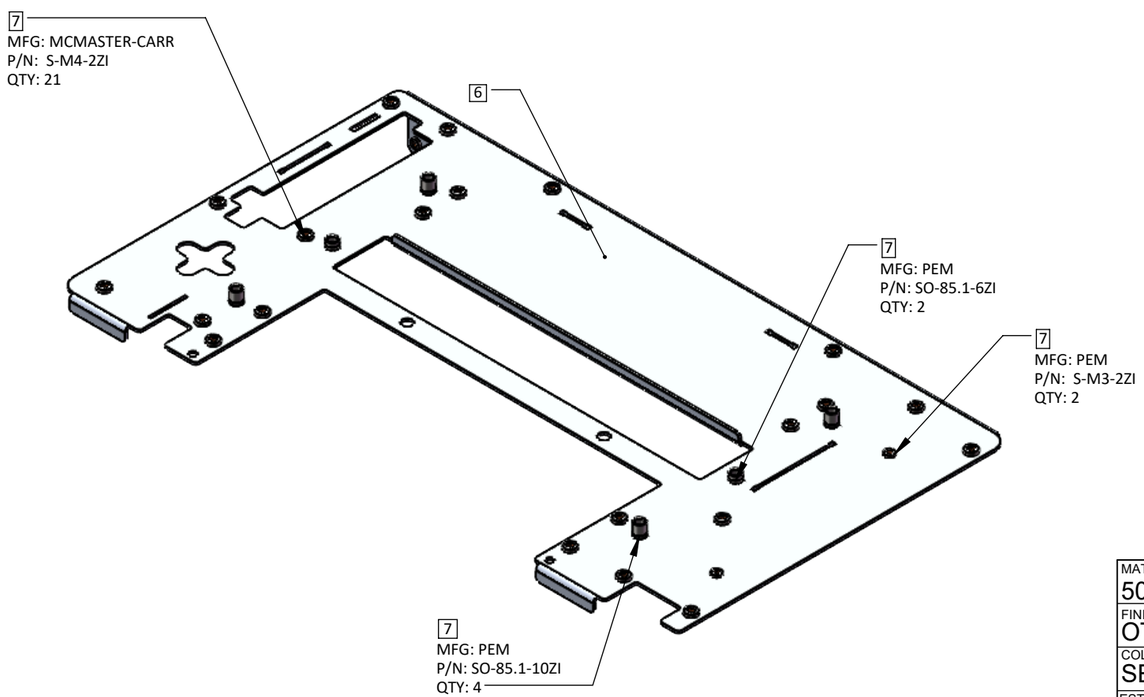

MATERIAL 5052-H32	UNLESS OTHERWISE SPECIFIED DIMENSIONS ARE IN MILLIMETERS DO NOT SCALE DRAWING	VotingWorks	
FINISH OTHER - SEE NOTES	TOLERANCES: SEE NOTES		
COLOR SEE NOTES	THIRD ANGLE PROJECTION	DESCRIPTION SUBASSEMBLY PLATE	
EST. WEIGHT 329.95	APPROVED BY PAK		
ENGINEER DBC	APPROVED DATE 11/15/2024	PART NUMBER VX~02-00020	REV. D
RELEASE DATE 10/31/2024	CAD TYPE EMBEDDED HARDWARE ASSEMBLY	SIZE B / SCALE 1:3	SHEET 1 OF 4

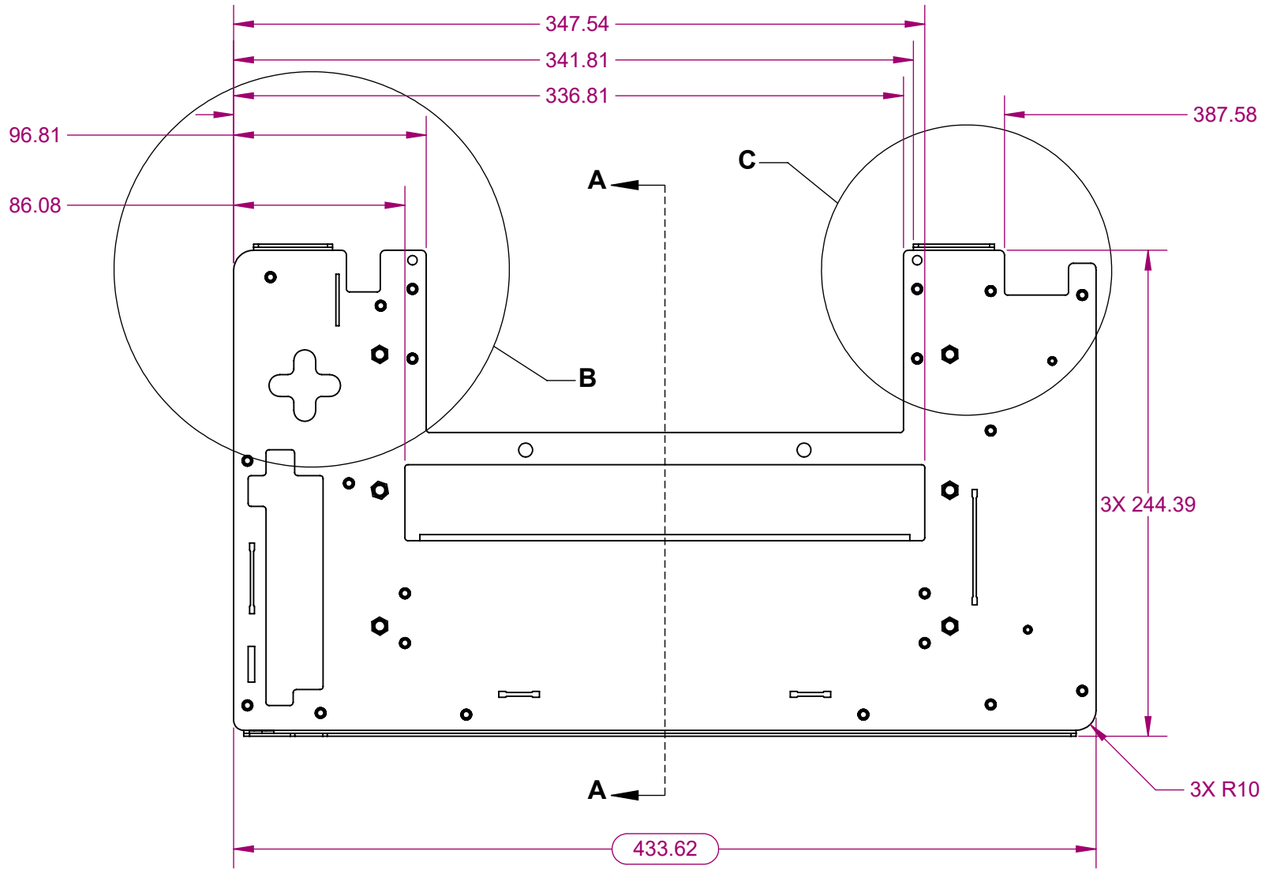

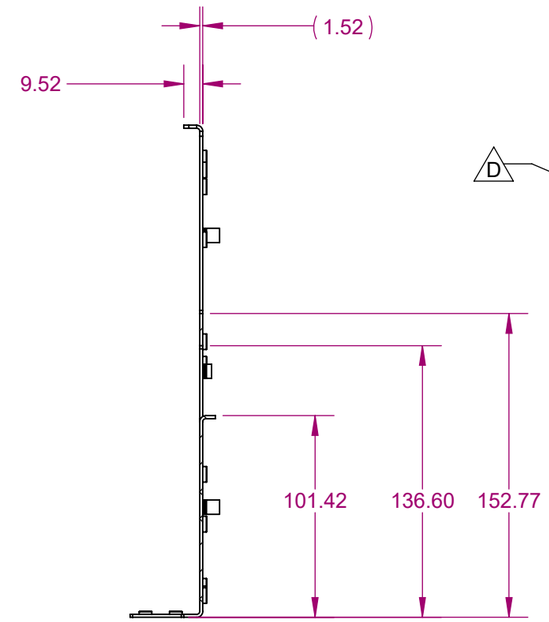

SECTION A-A

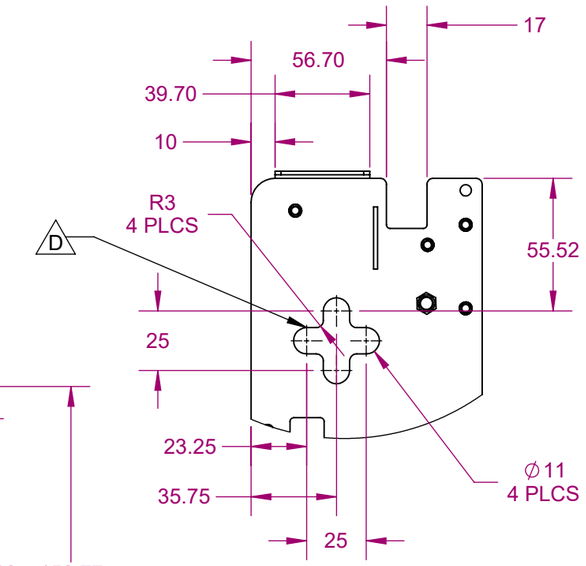

DETAIL B
SCALE 2 : 5

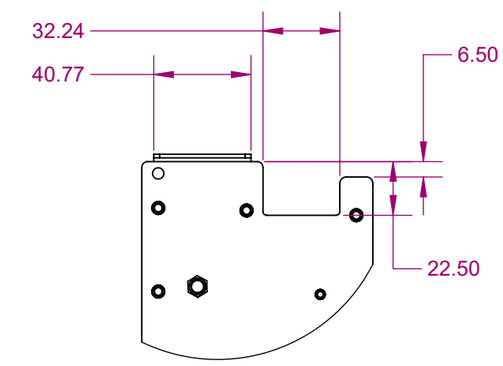

DETAIL C
SCALE 2 : 5

MATERIAL 5052-H32	UNLESS OTHERWISE SPECIFIED DIMENSIONS ARE IN MILLIMETERS DO NOT SCALE DRAWING	VotingWorks
FINISH OTHER - SEE NOTES	TOLERANCES: SEE NOTES	
COLOR SEE NOTES	THIRD ANGLE PROJECTION	DESCRIPTION SUBASSEMBLY PLATE
EST. WEIGHT 329.95	APPROVED BY PAK	
ENGINEER DBC	APPROVED DATE 11/15/2024	PART NUMBER VX~02-00020 — REV. D
RELEASE DATE 10/31/2024	CAD TYPE EMBEDDED HARDWARE ASSEMBLY	SIZE B — SCALE 1:3 — SHEET 2 OF 4

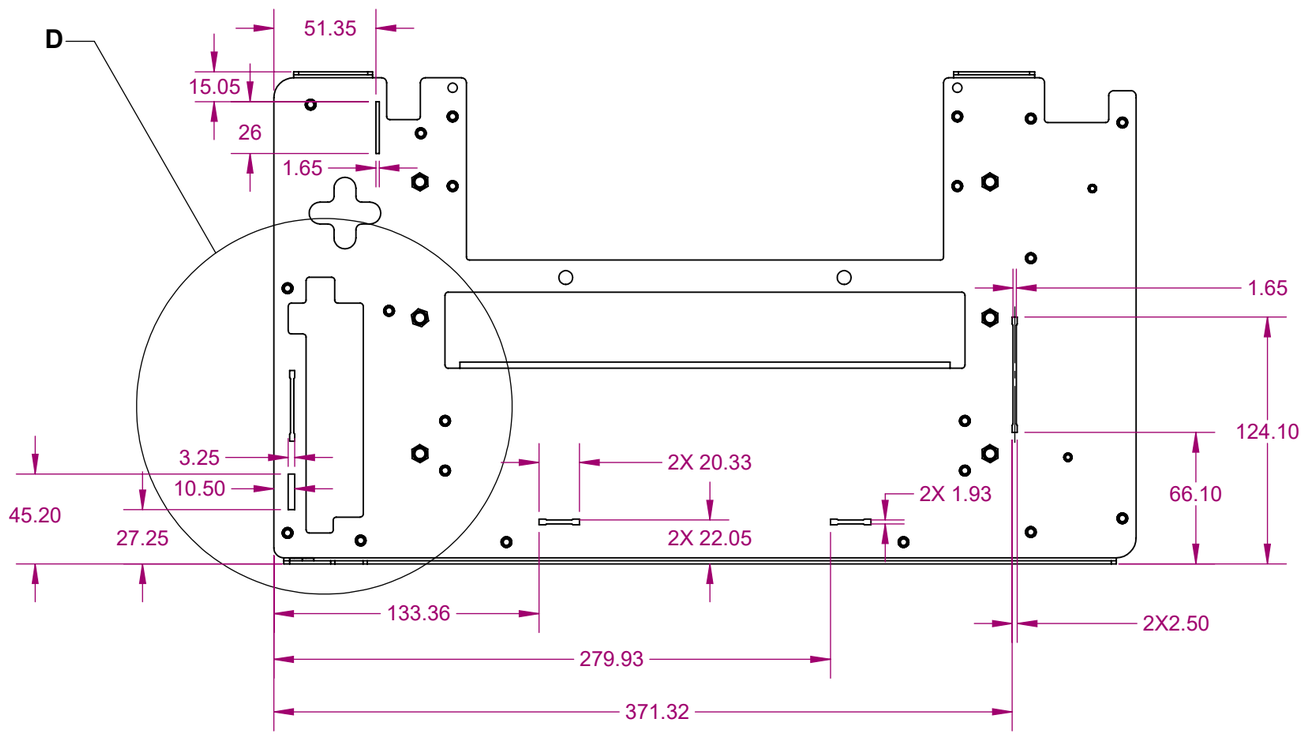

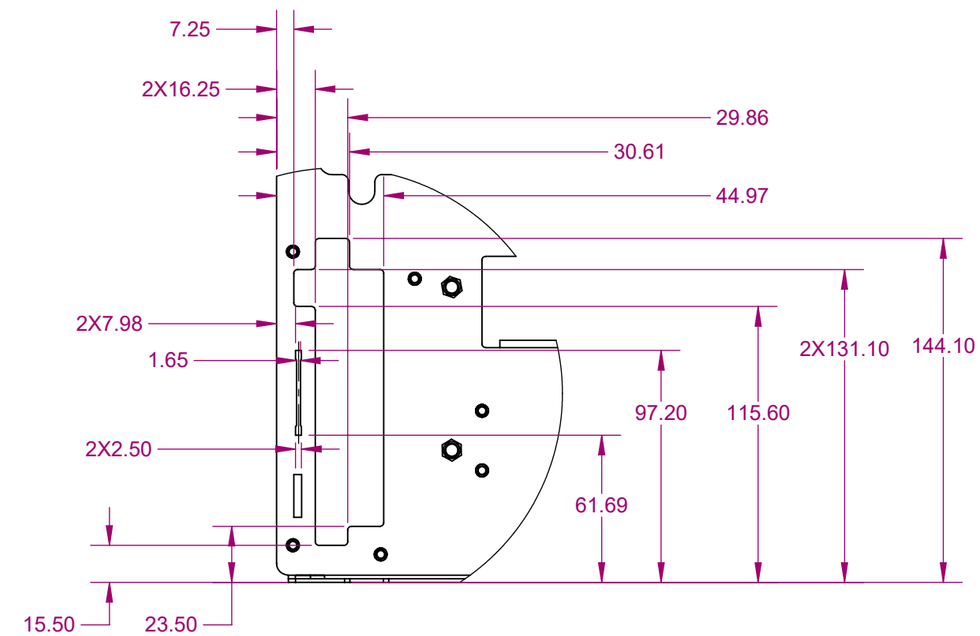

DETAIL D
SCALE 2 : 5

MATERIAL 5052-H32	UNLESS OTHERWISE SPECIFIED DIMENSIONS ARE IN MILLIMETERS DO NOT SCALE DRAWING	VotingWorks
FINISH OTHER - SEE NOTES	TOLERANCES: SEE NOTES	
COLOR SEE NOTES	THIRD ANGLE PROJECTION	DESCRIPTION SUBASSEMBLY PLATE
EST. WEIGHT 329.95	APPROVED BY PAK	
ENGINEER DBC	APPROVED DATE 11/15/2024	PART NUMBER VX~02-00020 — REV. D
RELEASE DATE 10/31/2024	CAD TYPE EMBEDDED HARDWARE ASSEMBLY	SIZE B — SCALE 1:3 — SHEET 3 OF 4

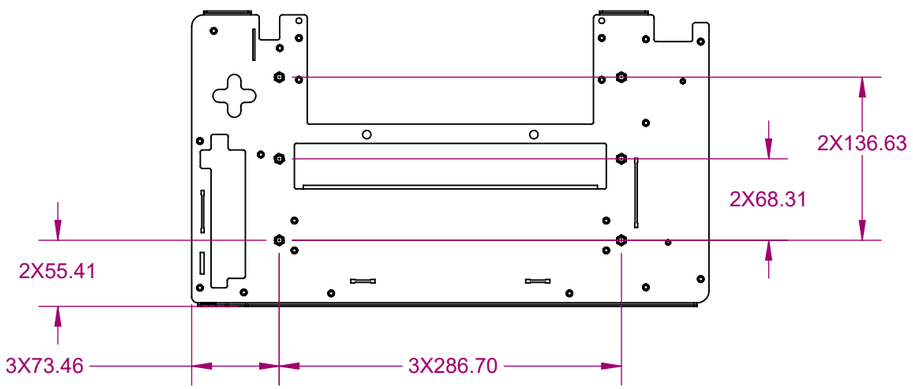

STANDOFF LOCATIONS

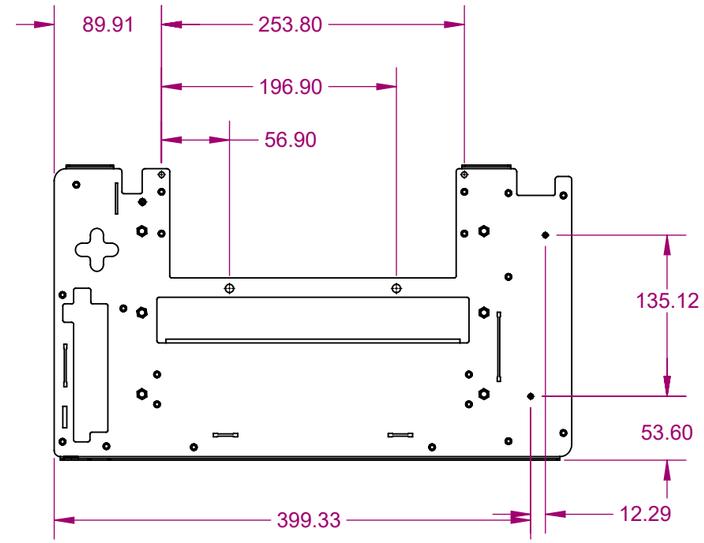

M3 SELF CLINCHING NUTS AND HOLE LOCATIONS

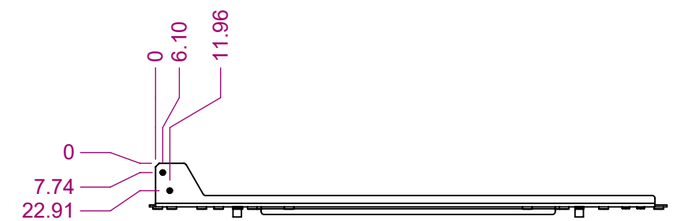

FRONT - NOT ALIGNED

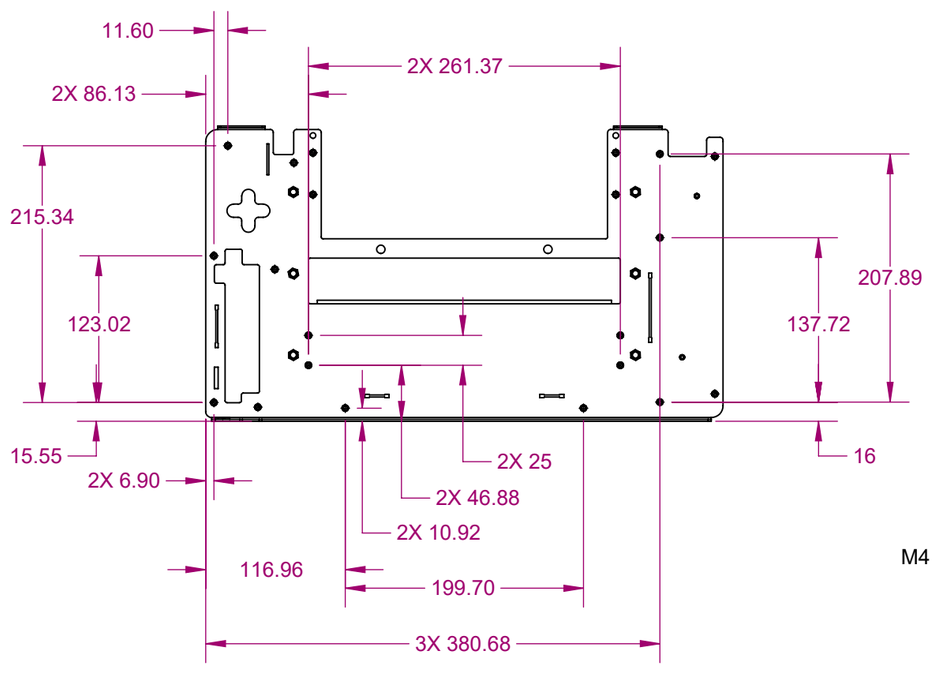

M4 SELF CLINCHING NUT LOCATIONS

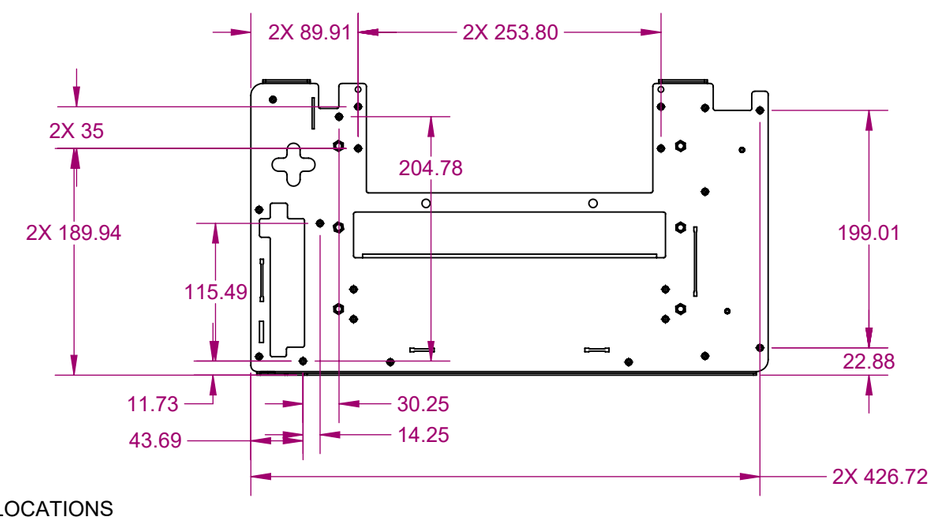

MATERIAL 5052-H32	UNLESS OTHERWISE SPECIFIED DIMENSIONS ARE IN MILLIMETERS DO NOT SCALE DRAWING	VotingWorks
FINISH OTHER - SEE NOTES	TOLERANCES: SEE NOTES	
COLOR SEE NOTES	THIRD ANGLE PROJECTION	DESCRIPTION SUBASSEMBLY PLATE
EST. WEIGHT 329.95	APPROVED BY PAK	
ENGINEER DBC	APPROVED DATE 11/15/2024	PART NUMBER VX~02-00020 — REV. D
RELEASE DATE 10/31/2024	CAD TYPE EMBEDDED HARDWARE ASSEMBLY	SIZE B — SCALE 1:5 — SHEET 4 OF 4