NOTES (UNLESS OTHERWISE SPECIFIED)

1. INTERPRET PER ASME Y14.5-2009. DIMENSIONS IN mm.
2. MODEL & DRAWING REPRESENT FINISHED PART.
3. FOR GEOMETRY NOT EXPLICITLY DESCRIBED IN DRAWING REFER TO 3D DATABASE.
4. GENERAL TOLERANCES: ISO 2768-mK (SEE TABLE).
5. INSIDE CORNER RADII ≥ ½ MATL THK. BREAK SHARP EDGES 0.2–0.4 mm.
6. LASER-ETCH P/N, REV & MATL ID (3 mm H) APPROX. WHERE SHOWN.
7. INSTALL HARDWARE PER MANUFACTURER SPEC.
8. MATERIAL: 5052-H32, 1.52 mm THK PER ASTM B209.
9. FINISH: ANODIZE PER MIL-A-8625, TYPE II, CLASS 2 (**BLACK**), 8–12 µm THK. BREAK SHARP EDGES 0.2–0.4 mm BEFORE ANODIZE. (RoHS COMPLIANT)

REVISIONS

REV.	DESCRIPTION	CR #	DATE	SUBMITTED BY
A	INITIAL RELEASE	-	10/08/2024	GJK
B	MOVED LASER ETCHING TO BOTTOM SURFACE	-	12/18/2024	DBC
C	ADDED SHROUD AND TABS	33	6/6/2025	JDEWALD
D	FEATURE FOR BULKHEAD ASSEMBLY	229, 231	4/1/2026	JDEWALD

ISO 2768 GENERAL TOLERANCES (mK)	
LINEAR DIMENSIONS – ISO 2768-1, CLASS m (mm)	
NOMINAL SIZE RANGE, L (mm)	PERMISSIBLE ± (mm)
0.5 ≤ L ≤ 6	0.10
6 < L ≤ 30	0.20
30 < L ≤ 120	0.30
120 < L ≤ 400	0.50
400 < L ≤ 1000	0.80
1000 < L ≤ 2000	1.20
2000 < L ≤ 4000	2.00

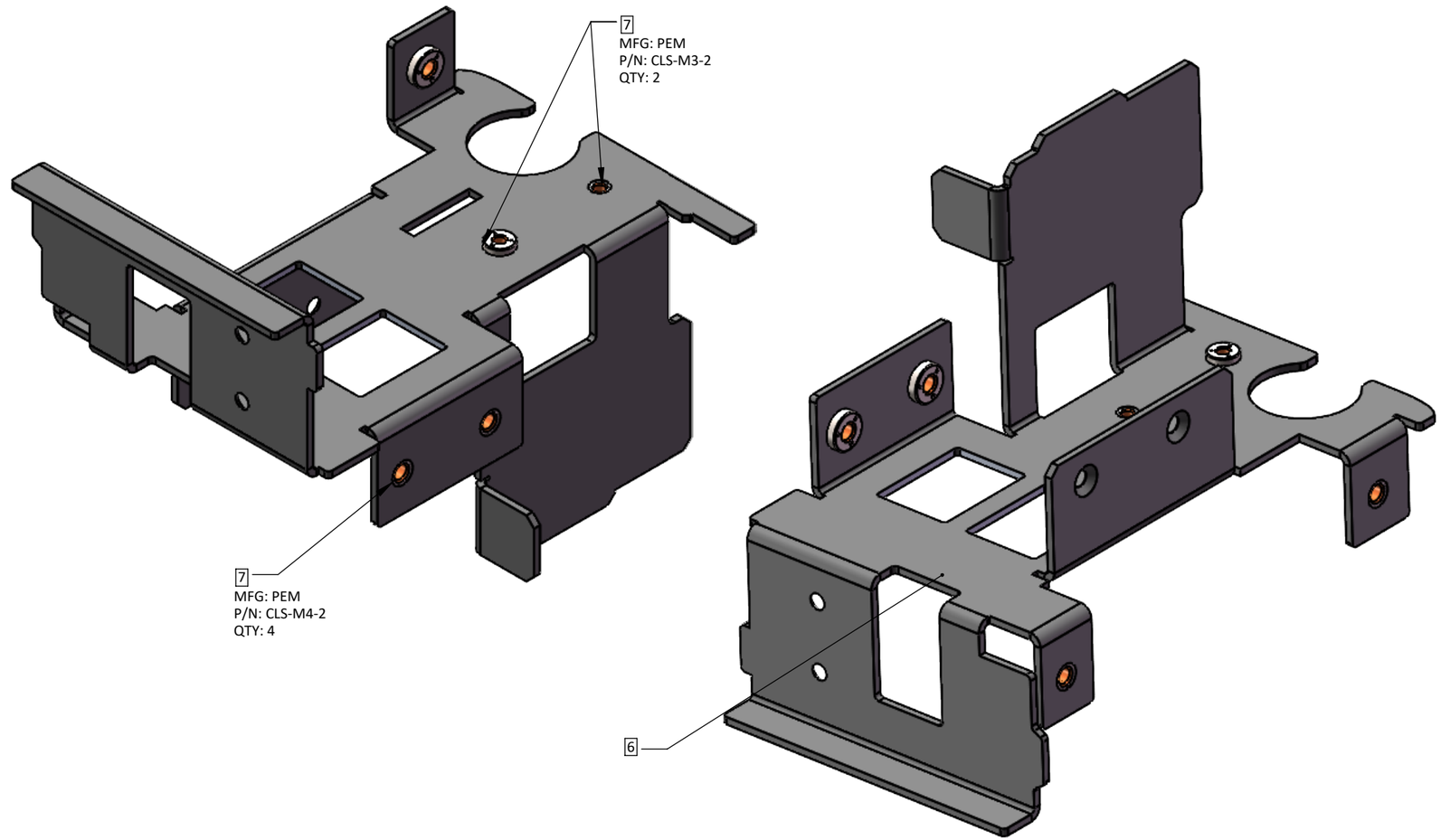

MATERIAL 5052-H32	UNLESS OTHERWISE SPECIFIED DIMENSIONS ARE IN MILLIMETERS DO NOT SCALE DRAWING	VotingWorks		
FINISH OTHER - SEE NOTES	TOLERANCES: SEE NOTES			
COLOR SEE NOTES	THIRD ANGLE PROJECTION	DESCRIPTION POLLWORKER PANEL WITH PEMS		
EST. WEIGHT 58.04	APPROVED BY			
ENGINEER JDEWALD	APPROVED DATE	PART NUMBER VX~02-00031		REV. D
RELEASE DATE 2/1/2025	CAD TYPE EMBEDDED HARDWARE ASSEMBLY	SIZE B	SCALE 1:1	SHEET 1 OF 2

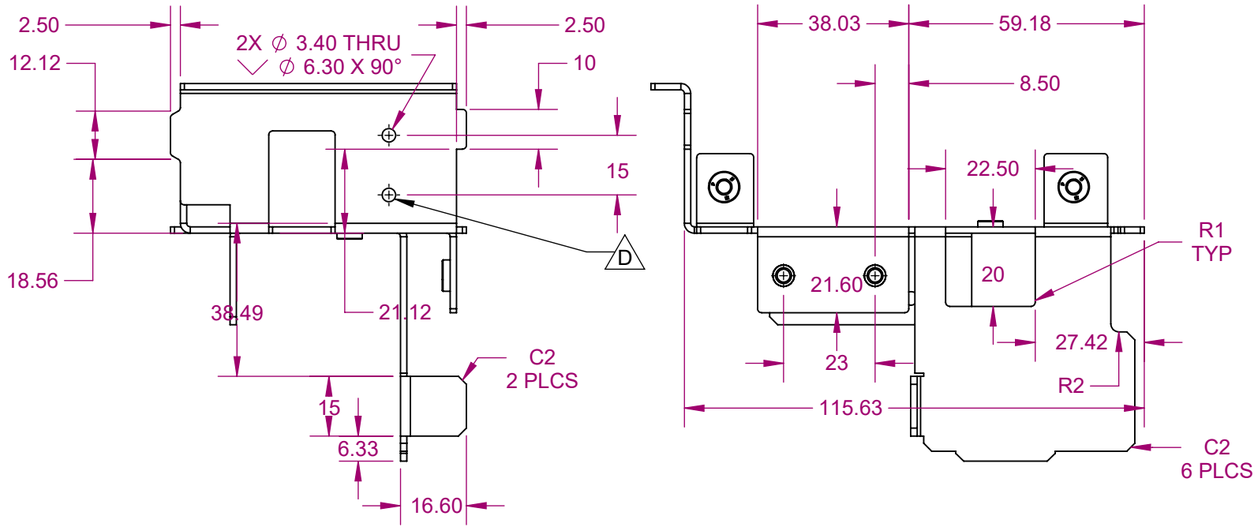

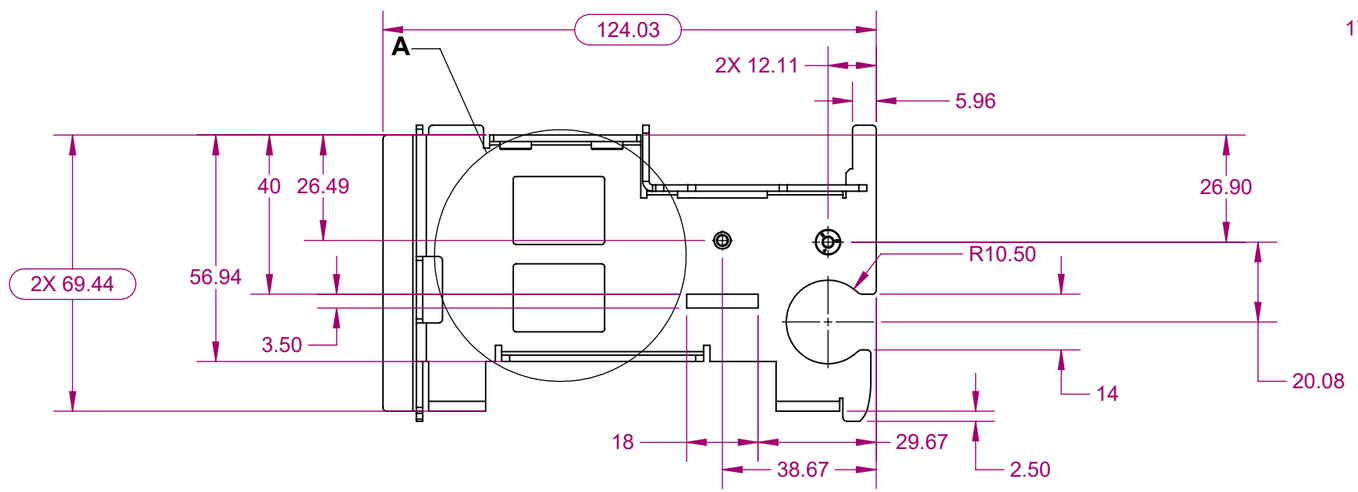

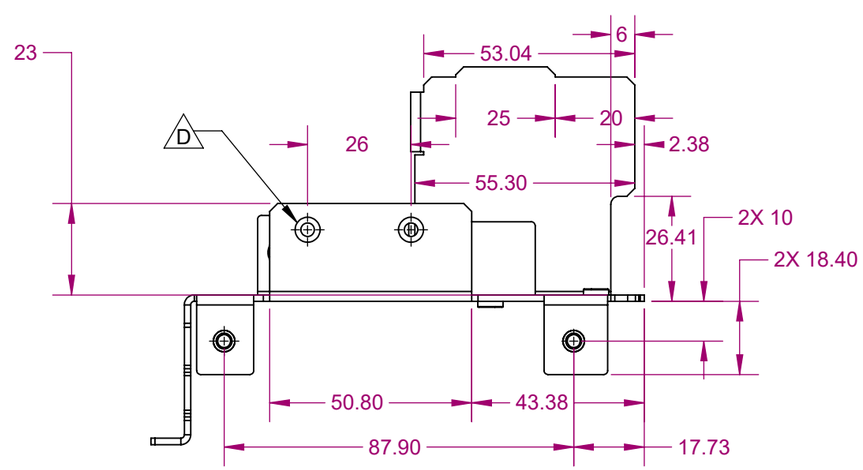

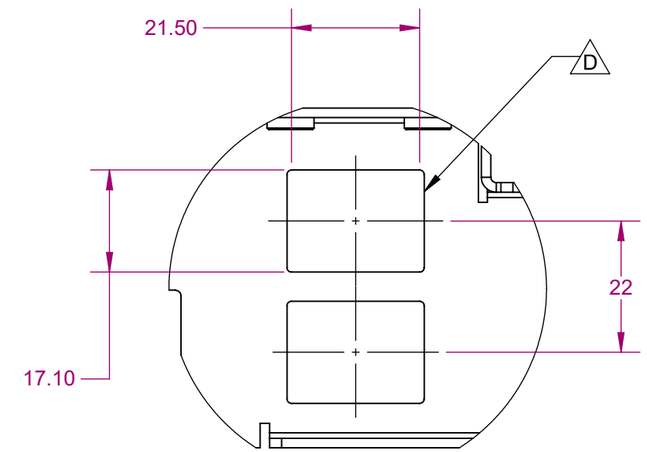

DETAIL A
SCALE 1 : 1
OCCURS 2X

MATERIAL: 5052-H32	UNLESS OTHERWISE SPECIFIED DIMENSIONS ARE IN MILLIMETERS DO NOT SCALE DRAWING	VotingWorks
FINISH: OTHER - SEE NOTES	TOLERANCES: SEE NOTES	
COLOR: SEE NOTES	THIRD ANGLE PROJECTION	DESCRIPTION: POLLWORKER PANEL WITH PEMS
EST. WEIGHT: 58.04	APPROVED BY	
ENGINEER: JDEWALD	APPROVED DATE	PART NUMBER: VX~02-00031 — REV. D
RELEASE DATE: 2/1/2025	CAD TYPE: EMBEDDED HARDWARE ASSEMBLY	SIZE: B — SCALE: 2:3 — SHEET: 2 OF 2