REVISIONS		
REV	DESCRIPTION	DATE
DVT	REFERENCE DESIGN FOR DVT	7/8/2019

NOTES: (UNLESS OTHERWISE SPECIFIED)

1. THIS DRAWING REFERENCES SUPPLIED 3D DATABASE. THE GEOMETRY IN THE DATABASE IS BASIC.

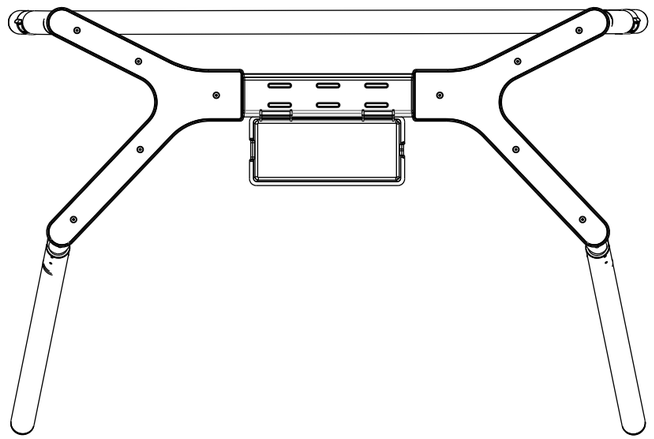

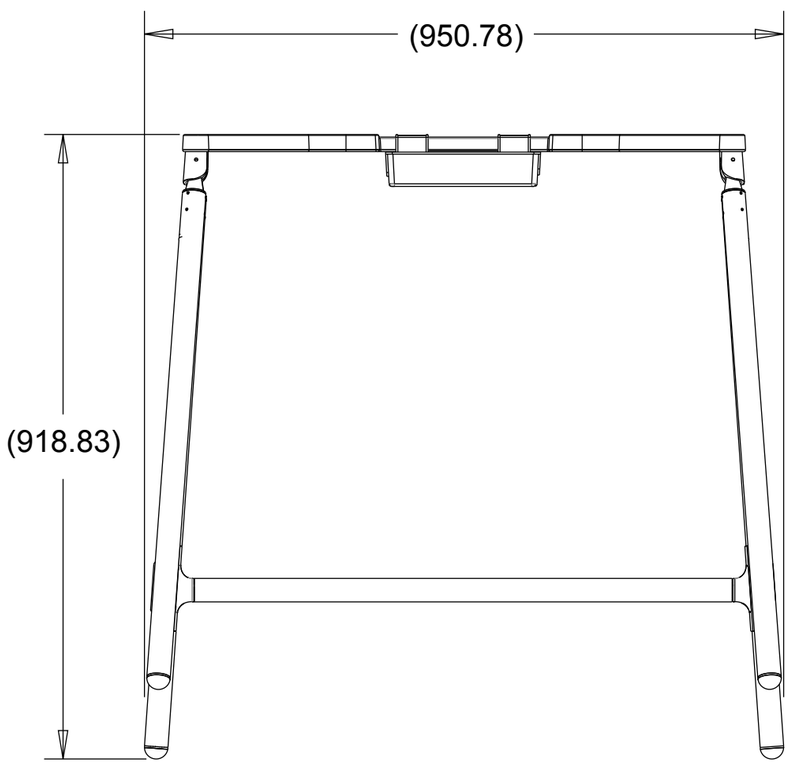

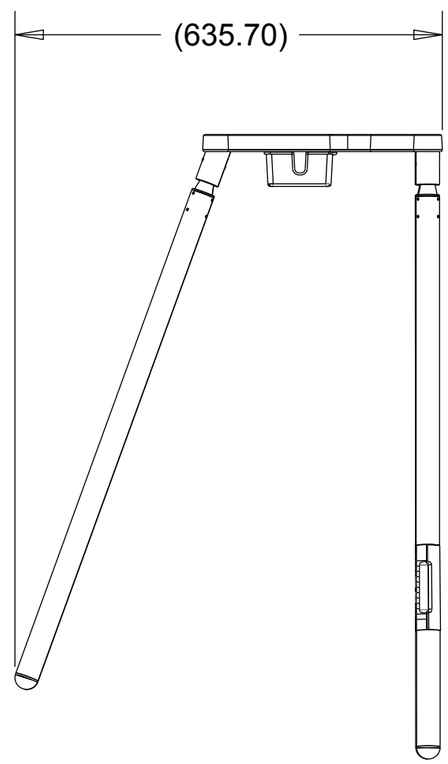

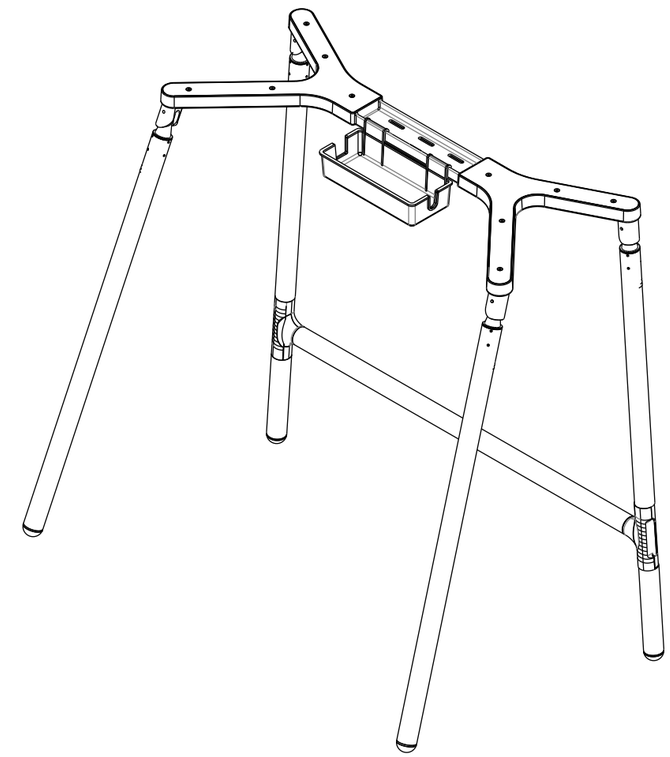

DIMENSIONS ARE IN MILLIMETERS

DO NOT SCALE DRAWING. SCALE NOTE(S) ARE SCALE REFERENCES RELATIVE TO MAIN VIEW ONLY AND MAY NOT REFLECT ACTUAL PART SIZE ON DRAWING.

THIS DOCUMENT CONTAINS INFORMATION THAT IS PROPRIETARY AND CONFIDENTIAL TO THE COUNTY OF LOS ANGELES. NO FURTHER REPRODUCTION, DISSEMINATION OR USE IS ALLOWED WITHOUT WRITTEN PERMISSION FROM THE COUNTY OF LOS ANGELES.

Registrar-Recorder / County Clerk
County of Los Angeles - California
12400 Imperial Highway
Norwalk, CA 90650
(800) 815-2666

DRAWN BY: JARLTECH	DATE: 7/8/2019	PROJECT:	VSAP
CHECKED BY: E. Chen	DATE: 7/8/2019	FILENAME:	STAND
APPROVED BY: J. Fourt (PENDING)	DATE: XX/XX/XX	SOFTWARE:	PTC CREO 5.0
THIRD ANGLE PROJECTION:		ORIGINAL DRAWING SIZE: B	SHEET: 1 OF 4 / REV: DVT

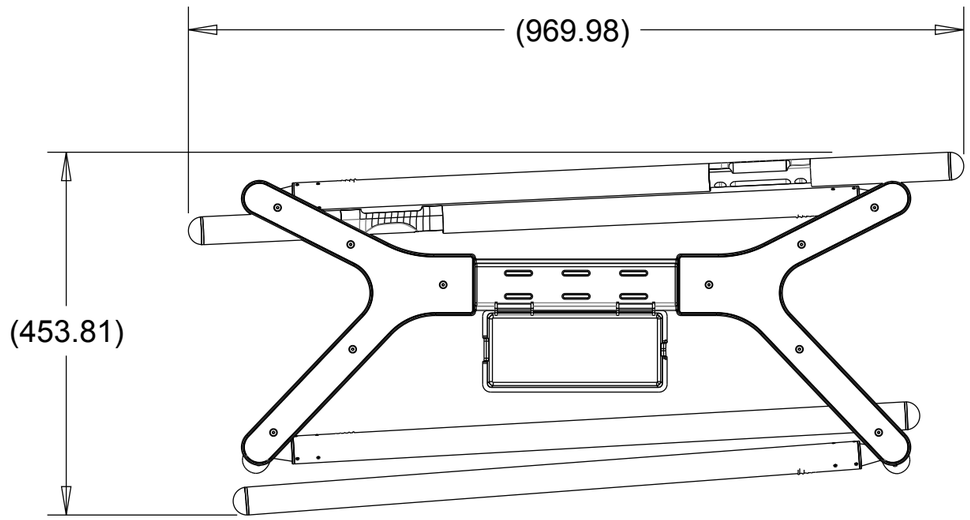

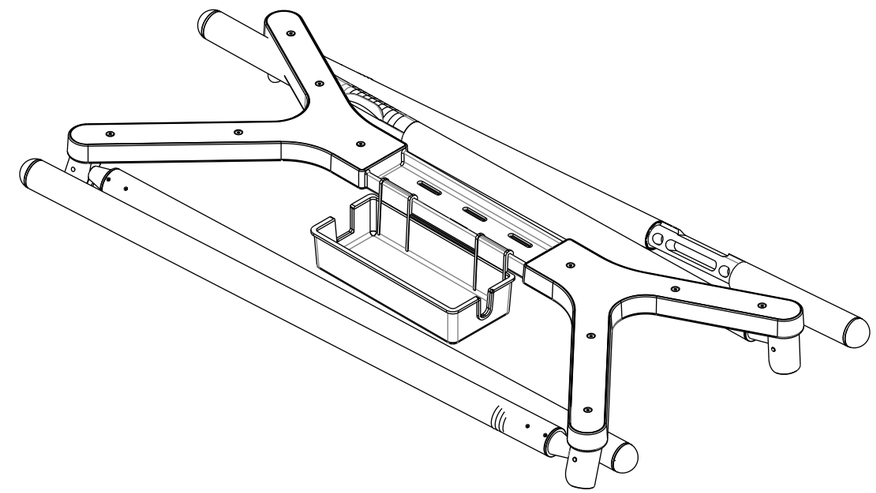

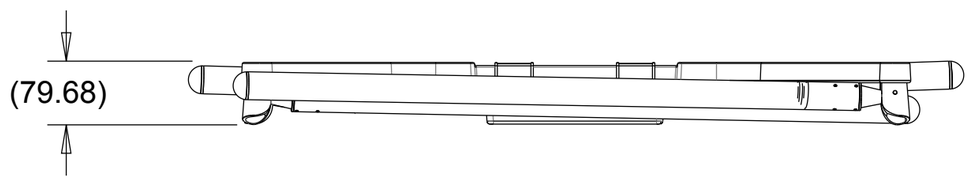

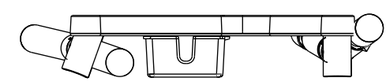

TITLE:	STAND		
ORIGINAL DRAWING SIZE:	B	SHEET: 2 OF 4	REV: DVT

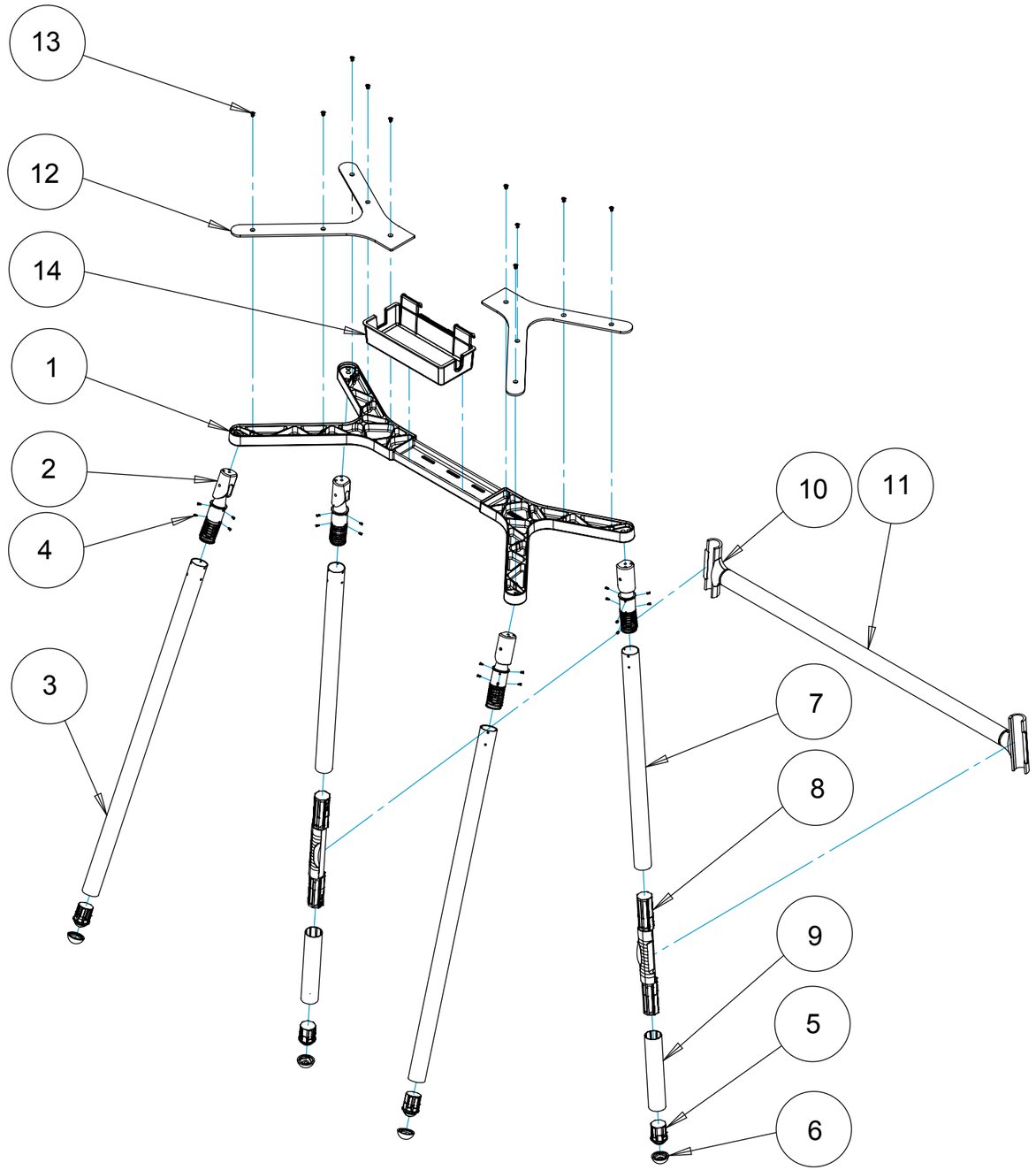

ITEM	PART NAME / FILE NAME	QTY.
1	STAND_FRAME	1
2	SPRING ASSEMBLY	4
3	STAND_FRONT_TUBE	2
4	SCREWS FLAT V HEX HEAD POSITION 85-93	24
5	STAND_FOOT	4
6	STAND_FOOT_CAP	4
7	STAND_BACK_UPPER_TUBE	2
8	STAND_BACK_TUBE_JOIN_LEFT & RIGHT	2
9	STAND_BACK_LOWER_TUBE	2
10	STAND_BRACE_HOOK_LEFT & RIGHT	2
11	STAND_BRACE_CROSS_TUBE	1
12	STAND_FRAME_COVER_LEFT & RIGHT	1
13	SCREWS FLAT V-HEX HEAD POSITION 77 - 78 X 5PCS, 77 -79 X 5PCS	10

TITLE:	STAND_ASSEMBLY		
ORIGINAL DRAWING SIZE: B		SHEET: 3 OF 4	REV: DVT

ITEM	PART NAME / FILE NAME	QTY.
14	STAND_SOCKET_KNUCKLE	1
15	STAND_SOCKET_CONE	1
16	STAND_SOCKET_CENTER_ROD	1
17	STAND_SOCKET_CENTER_ROD_PIN	1
18	STAND_SOCKET_SPRING	1
19	STAND_SOCKET_SPRING_CAP	1
20	SCREWS FLAT HEX HEAD POSITION 90-87	1
21	STAND_SOCKET_KNUCKLE_PIN	1

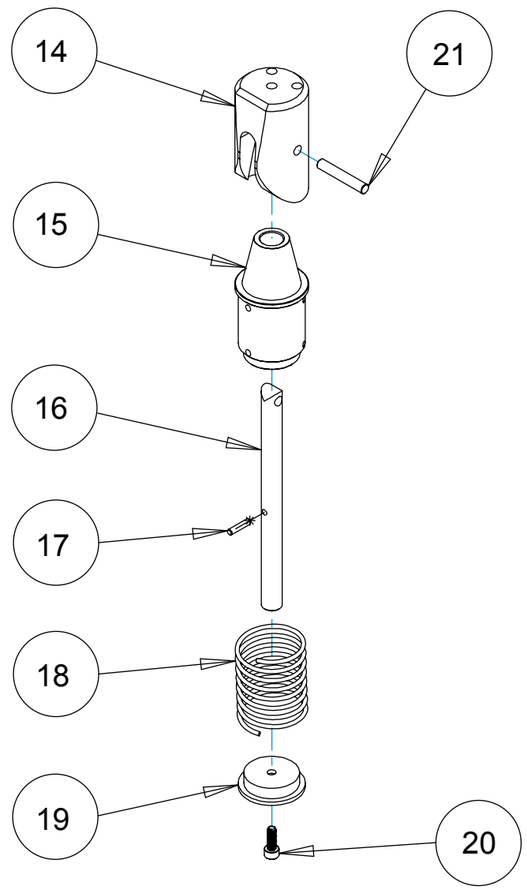

TITLE: SPRING_ASSEMBLY

ORIGINAL DRAWING SIZE: B

SHEET: 4 OF 4

REV: DVT