REVISIONS		
REV	DESCRIPTION	DATE
DVT	REFERENCE DESIGN FOR DVT	7/8/2019

NOTES: (UNLESS OTHERWISE SPECIFIED)

1. THIS DRAWING REFERENCES SUPPLIED 3D DATABASE. THE GEOMETRY IN THE DATABASE IS BASIC. ALL UNDIMENSIONED FEATURES ON PART TO MATCH THE CAD DATABASE WITHIN TOLERANCES AS SPECIFIED BY SPI STANDARDS & PRACTICES OF PLASTICS MOLDERS, COMMERCIAL STANDARD. INTERPRET DIMENSIONS AND TOLERANCES PER ASME Y14.5M-1994. ANY DIMENSIONS AND/OR TOLERANCES ON THIS DRAWING SUPERCEDE THE CAD DATABASE.

2. MATERIAL SPECIFICATION:
   A. PC/ABS; GRADE V0
   B. MATERIAL SUBSTITUTION PERMITTED WITH WRITTEN APPROVAL.
   C. COLOR TO MATCH THE CMF CHIP PROVIDED BY IDEO.
   D. REGRIND NOT PERMITTED.

[3] GATE INTO AREA INDICATED USING A DIRECT SPRUE

4. GATE VESTIGE TO BE TRIMMED FLUSH TO SURROUNDING SURFACE.

5. EJECTOR PIN MARKS TO BE FLUSH ± .005 TO SURROUNDING SURFACE.

6. UNLESS OTHERWISE SPECIFIED AND/OR ON A PARTING LINE, ALL SHARP EDGES AND CORNERS TO BE R .005.

[7] COSMETIC SURFACE: TOOLING MARKS OF ANY KIND NOT PERMITTED. COSMETIC MOLDING DEFECT LIMITS SPECIFICATION TBD.

8. SURFACE FINISH OF ALL PART SURFACES TO BE SPI B-2 (400 GRIT PAPER) OR BETTER PRIOR TO TEXTURING.

[9] INDICATED SURFACES TO BE TEXTURED TO MATCH MOLD-TECH MT-11010

10. PARTING AND/OR WITNESS LINE MISMATCH NOT TO EXCEED .003.

11. STANDING FLASH NOT TO EXCEED .005 IN ANY DIMENSION.

12. MOLDED PART TO BE FREE OF MOLD RELEASE OR OTHER SURFACE CONTAMINANTS.

13. DIMENSION(S) INSIDE ⬭ ARE KEY DESIGN FEATURE(S) AND ARE TO MEET APPLICABLE IN-PROCESS INSPECTION STANDARDS.

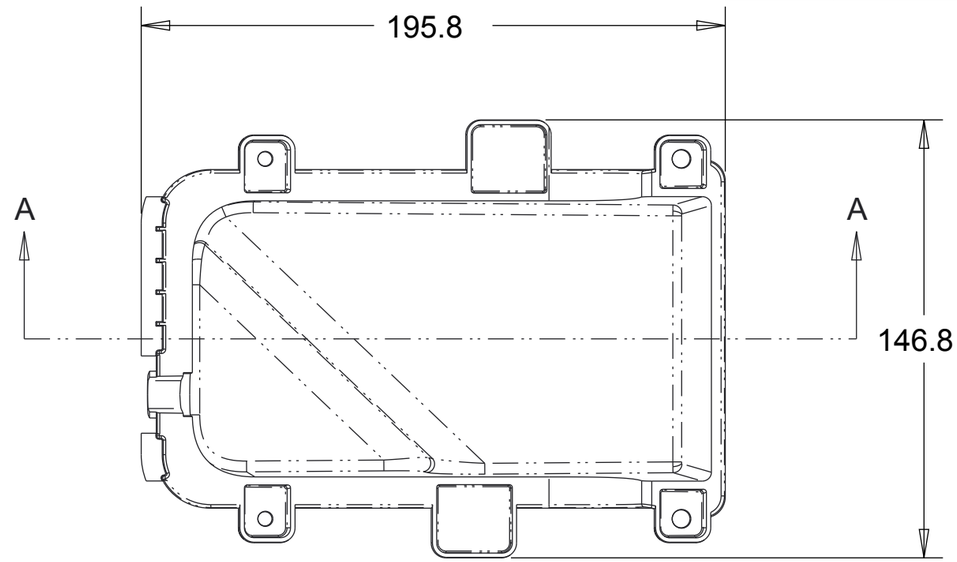

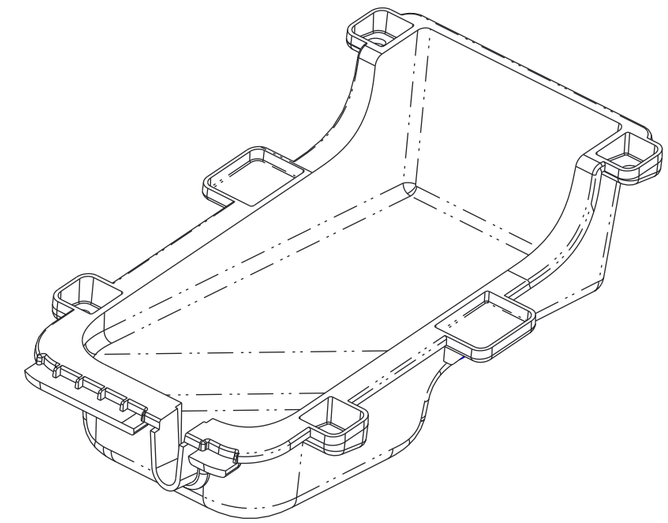

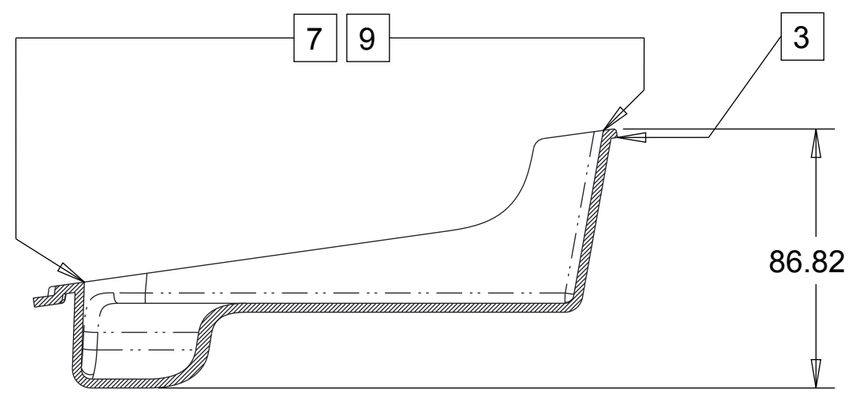

SECTION A-A

DIMENSIONS ARE IN MILLIMETERS

DO NOT SCALE DRAWING. SCALE NOTE(S) ARE SCALE REFERENCES RELATIVE TO MAIN VIEW ONLY AND MAY NOT REFLECT ACTUAL PART SIZE ON DRAWING.

THIS DOCUMENT CONTAINS INFORMATION THAT IS PROPRIETARY AND CONFIDENTIAL TO THE COUNTY OF LOS ANGELES. NO FURTHER REPRODUCTION, DISSEMINATION OR USE IS ALLOWED WITHOUT WRITTEN PERMISSION FROM THE COUNTY OF LOS ANGELES.

Registrar-Recorder / County Clerk
County of Los Angeles - California
12400 Imperial Highway
Norwalk, CA 90650
(800) 815-2666

DRAWN BY: JARLTECH	DATE: 7/8/2019	PROJECT:	VSAP
CHECKED BY: E. Chen	DATE: 7/8/2019	FILENAME:	KEYPAD_CABLE_TRAY
APPROVED BY: J. Fourt (PENDING)	DATE: XX/XX/XX	SOFTWARE:	PTC CREO 5.0
THIRD ANGLE PROJECTION:		ORIGINAL DRAWING SIZE: B	SHEET: 1 OF 1 / REV: DVT-1