REVISIONS		
REV	DESCRIPTION	DATE
DVT	REFERENCE DESIGN FOR DVT	7/8/2019

NOTES: (UNLESS OTHERWISE SPECIFIED)

1. THIS DRAWING REFERENCES SUPPLIED 3D DATABASE. THE GEOMETRY IN THE DATABASE IS BASIC. ALL UNDIMENSIONED FEATURES ON PART TO MATCH THE CAD DATABASE WITHIN TOLERANCES AS SPECIFIED BELOW. INTERPRET DIMENSIONS AND TOLERANCES PER ASME Y14.5M-1994. ANY DIMENSIONS AND/OR TOLERANCES ON THIS DRAWING SUPERCEDE THE CAD DATABASE.

   TOLERANCES:

HOLE DIAMETER	± .003
EDGE TO HOLE	± .005
HOLE TO HOLE	± .005
EDGE TO BEND	± .010
BEND TO BEND	± .010
BEND ANGLE	± 0.5º

2. MATERIAL SPECIFICATION:
   A. STEEL; SPCC
   B. MATERIAL SUBSTITUTION PERMITTED WITH WRITTEN APPROVAL.
   C. COLOR TO MATCH PURE BLACK.
3. MINIMUM INSIDE BEND RADIUS TO BE 50% OF MATERIAL THICKNESS.
4. MATERIAL GRAIN DIRECTION OPTIONAL.
5. PUNCH ENTRY DIRECTION VENDOR OPTION.
6. FINISH: ELECTRO-DEPOSITION COATING.
7. DIMENSION(S) MARKED INSIDE ⬭ ARE KEY DESIGN FEATURE(S) AND ARE TO MEET APPLICABLE IN-PROCESS INSPECTION STANDARDS.

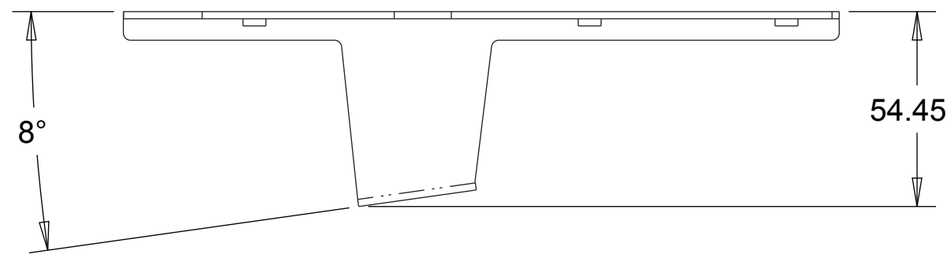

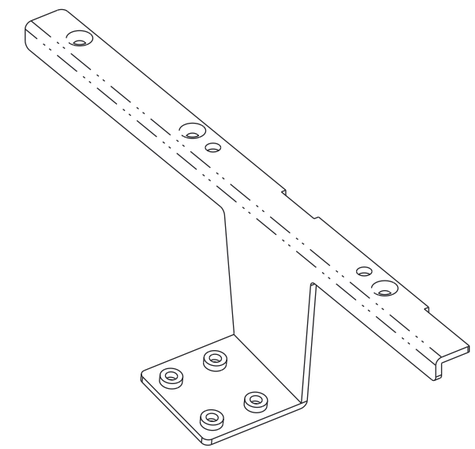

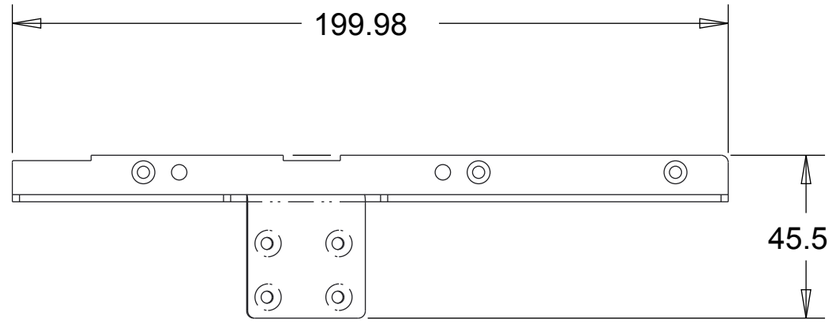

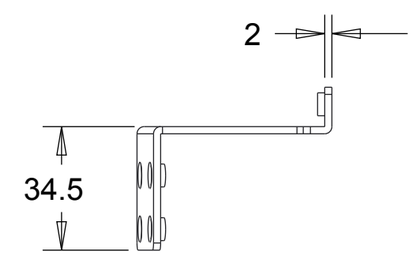

DIMENSIONS ARE IN MILLIMETERS

DO NOT SCALE DRAWING. SCALE NOTE(S) ARE SCALE REFERENCES RELATIVE TO MAIN VIEW ONLY AND MAY NOT REFLECT ACTUAL PART SIZE ON DRAWING.

THIS DOCUMENT CONTAINS INFORMATION THAT IS PROPRIETARY AND CONFIDENTIAL TO THE COUNTY OF LOS ANGELES. NO FURTHER REPRODUCTION, DISSEMINATION OR USE IS ALLOWED WITHOUT WRITTEN PERMISSION FROM THE COUNTY OF LOS ANGELES.

Registrar-Recorder / County Clerk
County of Los Angeles - California
12400 Imperial Highway
Norwalk, CA 90650
(800) 815-2666

DRAWN BY: JARLTECH	DATE: 7/8/2019	PROJECT:	VSAP
CHECKED BY: E. Chen	DATE: 7/8/2019	FILENAME:	MONITOR_FRAME_RIGHT
APPROVED BY: J. Fourt (PENDING)	DATE: XX/XX/XX	SOFTWARE:	PTC CREO 5.0
THIRD ANGLE PROJECTION:		ORIGINAL DRAWING SIZE: B	SHEET: 1 OF 1 / REV: DVT-1