NOTES (UNLESS SPECIFIED OTHERWISE):

1.0 DESCRIPTION AND APPLICATION:
1.1 ASSEMBLY TO BE USED IN A COMMERCIAL PRODUCT (INDOOR USE).

2.0 APPLICABLE DOCUMENTATION:
2.1 INTERPRET DRAWING PER ASME Y14.5-2009 DIMENSIONING AND TOLERANCING STANDARDS.

3.0 REQUIREMENTS:
3.1 DIMENSIONS ARE IN MILLIMETERS (MAXIMUM MATERIAL CONDITION)
3.2 IF PROVIDED, ALL DIMENSIONS SHOWN SHALL BE CHECKED DURING FIRST ARTICLE INSPECTION. FAI MUST BE APPROVED FOR THE SPECIFIC REVISION OF THIS ASSEMBLY PRIOR TO SHIPMENT OF PARTS.
3.3 DIMENSIONS INDICATED BY (X.XXX) ARE PROCESS CONTROL/MONITORING DIMENSIONS.
3.4 DIMENSIONS IN PARENTHESIS "(X.XXX)" OR MARKED REFERENCE "X.XX REF" ARE DIMENSIONS WITHOUT TOLERANCE AND ARE FOR INFORMATION PURPOSE ONLY.
3.5 UNLESS OTHERWISE NOTED GENERAL TOLERANCES: +/-.125 MM
3.6 PARTS MUST BE FREE OF ANY FOREIGN MATERIAL, INCLUDING BUT NOT LIMITED TO: DIRT, CHIPS, OIL, AND OTHER CONTAMINANTS.
3.7 NO CHANGES SHALL BE ALLOWED, REGARDLESS OF WHETHER SUCH CHANGE AFFECTS CHARACTERISTICS, WITHOUT PRIOR EXPLICIT APPROVAL BY PUMP STUDIOS AND/OR VOTINGWORKS.

4.0 INSPECTION & SHIPPING REQUIREMENTS:
4.1 VERIFY PART SAMPLES CONFORM TO DESIGN REQUIREMENTS USING STANDARD TEST EQUIPMENT AND VISUAL INSPECTION TECHNIQUES.
4.2 PACKAGING FOR SHIPMENT: PART SHALL BE ADEQUATELY PROTECTED TO PREVENT DAMAGE IN TRANSIT AND HANDLING.
4.3 VENDOR TO SUPPLY WITH EACH SHIPMENT: MATERIAL CERTIFICATION, SHIPPER DOCUMENTS WITH PART NUMBER, PART NAME, REVISION, LOT NUMBER, QUANTITY AND P.O. NUMBER.
4.4 PACKAGING LABELS AND MATERIAL TRACEABILITY MUST CONFORM TO UL 746D.

5.0 APPROVALS:
5.1 SUPPLIER IS RESPONSIBLE TO ENSURE THIS PART OR ASSEMBLY IS FULLY COMPLIANT WITH THE EUROPEAN UNION (EU) RESTRICTION OF HAZARDOUS SUBSTANCES (ROHS) DIRECTIVE 2002/95/EC, LATEST REVISION, AT TIME OF SHIPMENT.
5.2 SUPPLIER WILL FURNISH A CERTIFICATION OF COMPLIANCE (C OF C) WITH FIRST ARTICLES WHEN SPECIFICALLY REQUESTED.

6.0 LOCTITE 425 THREAD-LOCKING ADHESIVE SHALL BE APPLIED PER MANUFACTURER RECOMMENDATION TO ALL THREADED HARDWARE AND/OR SCREWS, UNLESS OTHERWISE SPECIFIED.

REVISIONS

REV.	DESCRIPTION	CR #	DATE	SUBMITTED BY
A	INITIAL RELEASE	-	10/03/2024	GJK
B	ADDED PAT / AUDIO ASSEMBLY	230, 231	3/31/2026	JDEWALD

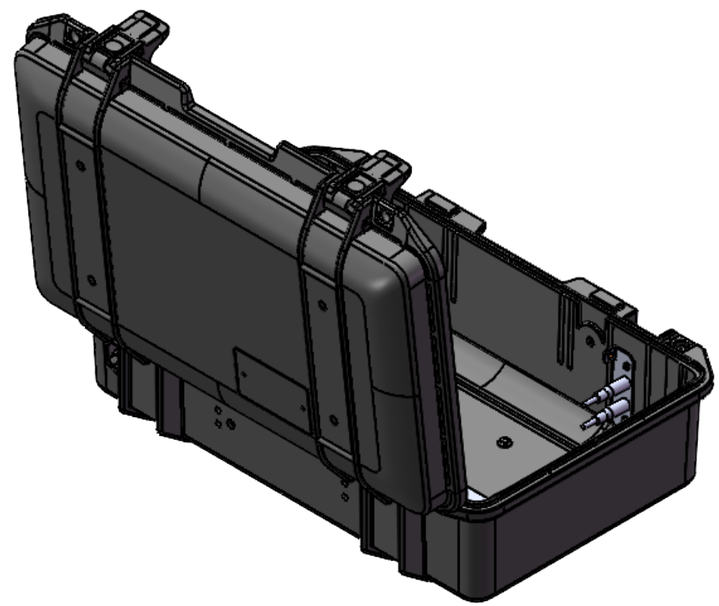

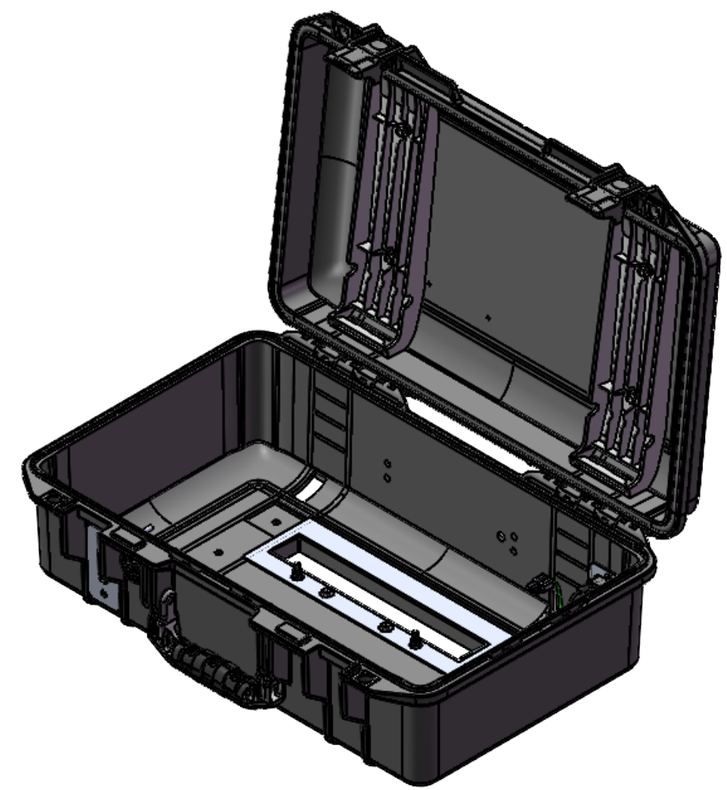

B

ITEM NO.	QTY.	PART NUMBER	DESCRIPTION
13	1	VX~01-00099	PAT + AUDIO JACK ASSEMBLY
12	1	VX~02-00101	PAT AUDIO BEZEL
11	1	VX~02-00069	CABLE, POWER ENTRY STAGE 1, MODULE JUMPER
10	1	VX~02-00097	POWER ENTRY MODULE BRACKET
9	4	VX~99-00106	M4X0.7PX6L, SHCS, ZINC-PLATED STEEL
8	4	VX~99-00119	M3X0.5PX10L, FHCS, 90°, BLACK-OXIDE STEEL
7	8	VX~99-00112	WASHER, OVERSIZED, M4, 4.4MM ID, 11.7MM OD, ZINC-PLATED STEEL
6	4	VX~99-00110	M4X0.7PX10L, SHCS, LOW-PROFILE, ZINC-PLATED STEEL
5	1	VX~02-00056	LOCKOUT SLIDER FRAME
4	1	VX~02-00019	MCM FOOT WITH BRASS INSERTS
3	2	VX~02-00063	TOP TUB ATTACHMENT PLATE WITH PEMS
2	2	VX~02-00064	DISPLAY BRACKET MOUNT, LID
1	1	VX~02-00068	PELICAN 1485 WITH MODIFICATIONS

MATERIAL: N/A	UNLESS OTHERWISE SPECIFIED DIMENSIONS ARE IN MILLIMETERS DO NOT SCALE DRAWING	VotingWorks			
FINISH: NONE / AS FABRICATED	TOLERANCES: SEE NOTES				
COLOR: SEE BOM	THIRD ANGLE PROJECTION	DESCRIPTION: ASSEMBLY, VXSCAN EXTERIOR			
EST. WEIGHT: 5398.75	APPROVED BY: EER				
ENGINEER: DBC	APPROVED DATE: 11/18/2024	PART NUMBER: VX~01-00018			REV. B
RELEASE DATE: 10/31/2024	CAD TYPE: MULTI PART ASSEMBLY	SIZE: B	SCALE: 1:5	SHEET: 1 OF 2	

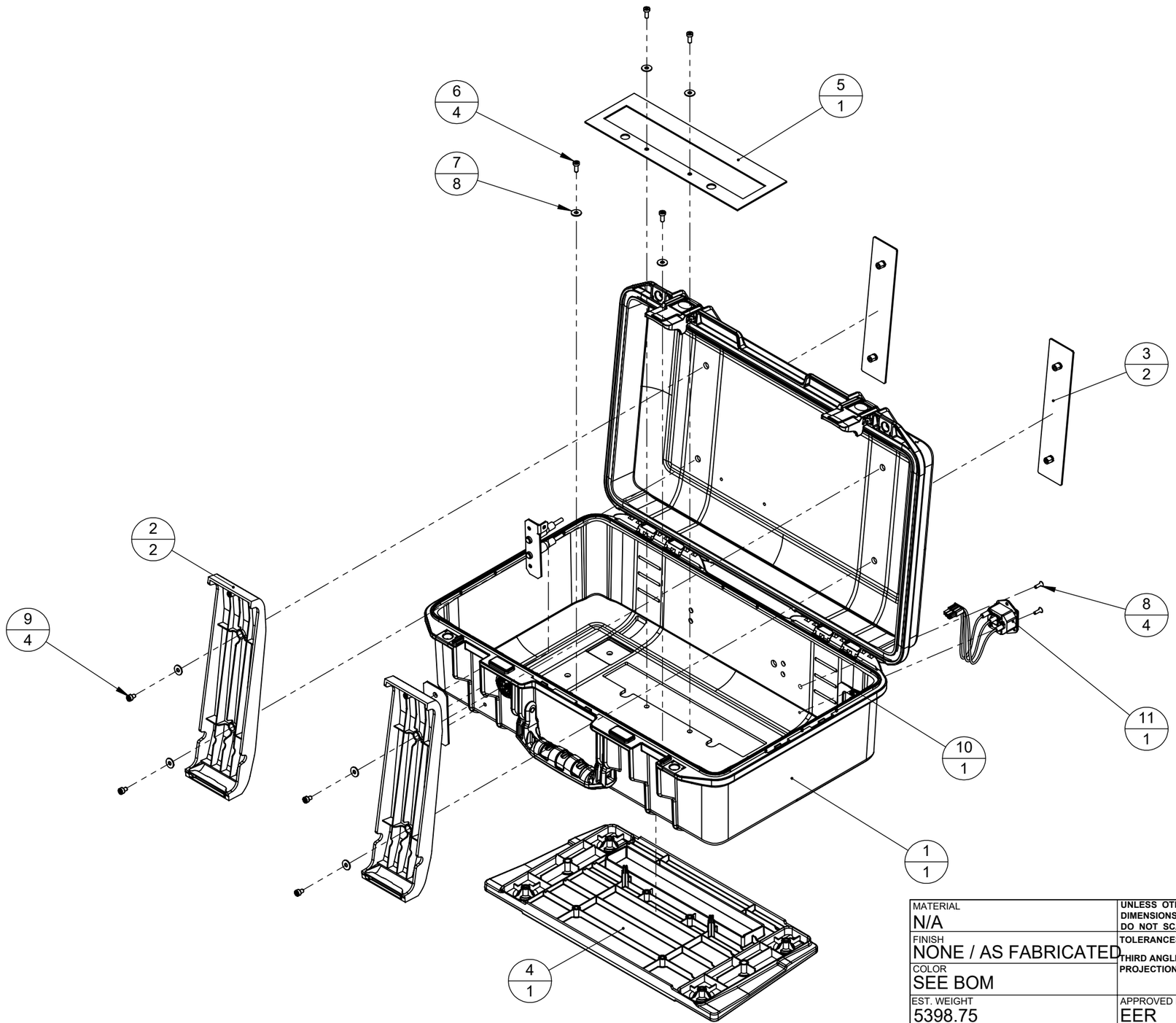

MATERIAL N/A	UNLESS OTHERWISE SPECIFIED DIMENSIONS ARE IN MILLIMETERS DO NOT SCALE DRAWING	VotingWorks
FINISH NONE / AS FABRICATED	TOLERANCES: SEE NOTES THIRD ANGLE PROJECTION	
COLOR SEE BOM		DESCRIPTION ASSEMBLY, VXSCAN EXTERIOR
EST. WEIGHT 5398.75	APPROVED BY EER	
ENGINEER DBC	APPROVED DATE 11/18/2024	PART NUMBER VX~01-00018 — REV. B
RELEASE DATE 10/31/2024	CAD TYPE MULTI PART ASSEMBLY	SIZE B — SCALE 1:5 — SHEET 2 OF 2