NOTES (UNLESS SPECIFIED OTHERWISE):

1.0 DESCRIPTION AND APPLICATION:
1.1 ASSEMBLY TO BE USED IN A COMMERCIAL PRODUCT (INDOOR USE).

2.0 APPLICABLE DOCUMENTATION:
2.1 INTERPRET DRAWING PER ASME Y14.5-2009 DIMENSIONING AND TOLERANCING STANDARDS.

3.0 REQUIREMENTS:
3.1 DIMENSIONS ARE IN MILLIMETERS (MAXIMUM MATERIAL CONDITION)
3.2 IF PROVIDED, ALL DIMENSIONS SHOWN SHALL BE CHECKED DURING FIRST ARTICLE INSPECTION. FAI MUST BE APPROVED FOR THE SPECIFIC REVISION OF THIS ASSEMBLY PRIOR TO SHIPMENT OF PARTS.
3.3 DIMENSIONS INDICATED BY (X.XXX) ARE PROCESS CONTROL/MONITORING DIMENSIONS.
3.4 DIMENSIONS IN PARENTHESIS "(X.XXX)" OR MARKED REFERENCE "X.XX REF" ARE DIMENSIONS WITHOUT TOLERANCE AND ARE FOR INFORMATION PURPOSE ONLY.
3.5 UNLESS OTHERWISE NOTED GENERAL TOLERANCES: +/-.125 MM
3.6 PARTS MUST BE FREE OF ANY FOREIGN MATERIAL, INCLUDING BUT NOT LIMITED TO: DIRT, CHIPS, OIL, AND OTHER CONTAMINANTS.
3.7 NO CHANGES SHALL BE ALLOWED, REGARDLESS OF WHETHER SUCH CHANGE AFFECTS CHARACTERISTICS, WITHOUT PRIOR EXPLICIT APPROVAL BY PUMP STUDIOS AND/OR VOTINGWORKS.

4.0 INSPECTION & SHIPPING REQUIREMENTS:
4.1 VERIFY PART SAMPLES CONFORM TO DESIGN REQUIREMENTS USING STANDARD TEST EQUIPMENT AND VISUAL INSPECTION TECHNIQUES.
4.2 PACKAGING FOR SHIPMENT: PART SHALL BE ADEQUATELY PROTECTED TO PREVENT DAMAGE IN TRANSIT AND HANDLING.
4.3 VENDOR TO SUPPLY WITH EACH SHIPMENT: MATERIAL CERTIFICATION, SHIPPER DOCUMENTS WITH PART NUMBER, PART NAME, REVISION, LOT NUMBER, QUANTITY AND P.O. NUMBER.
4.4 PACKAGING LABELS AND MATERIAL TRACEABILITY MUST CONFORM TO UL 746D.

5.0 APPROVALS:
5.1 SUPPLIER IS RESPONSIBLE TO ENSURE THIS PART OR ASSEMBLY IS FULLY COMPLIANT WITH THE EUROPEAN UNION (EU) RESTRICTION OF HAZARDOUS SUBSTANCES (ROHS) DIRECTIVE 2002/95/EC, LATEST REVISION, AT TIME OF SHIPMENT.
5.2 SUPPLIER WILL FURNISH A CERTIFICATION OF COMPLIANCE (C OF C) WITH FIRST ARTICLES WHEN SPECIFICALLY REQUESTED.

6.0 LOCTITE 425 THREAD-LOCKING ADHESIVE SHALL BE APPLIED PER MANUFACTURER RECOMMENDATION TO ALL THREADED HARDWARE AND/OR SCREWS, UNLESS OTHERWISE SPECIFIED.

REVISIONS

REV.	DESCRIPTION	CR #	DATE	SUBMITTED BY
A	INITIAL RELEASE	-	10/03/2024	LPE
B	UPDATED POLL WORKER ASSEMBLY	230	3/31/2026	JDEWALD

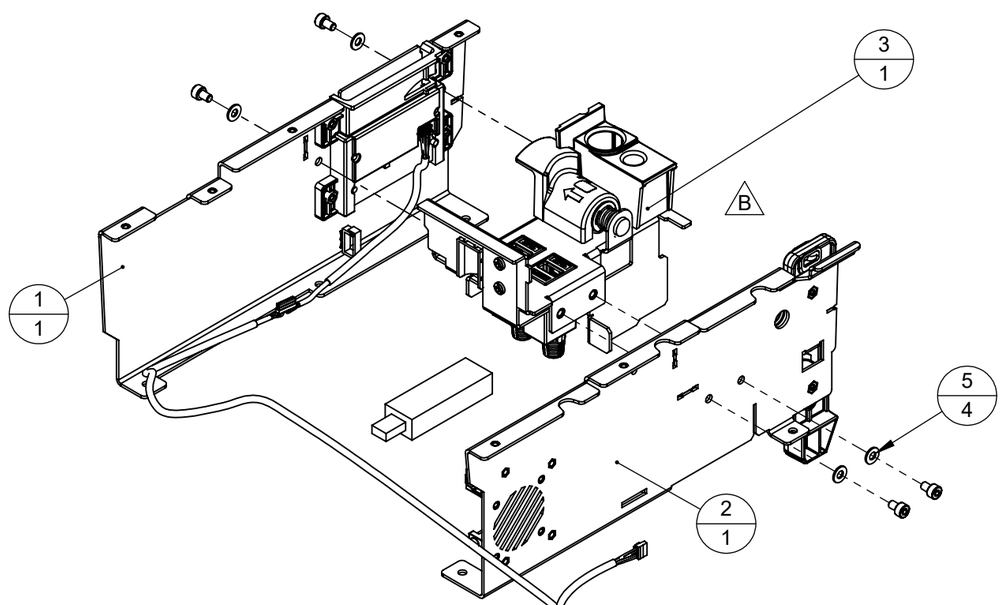

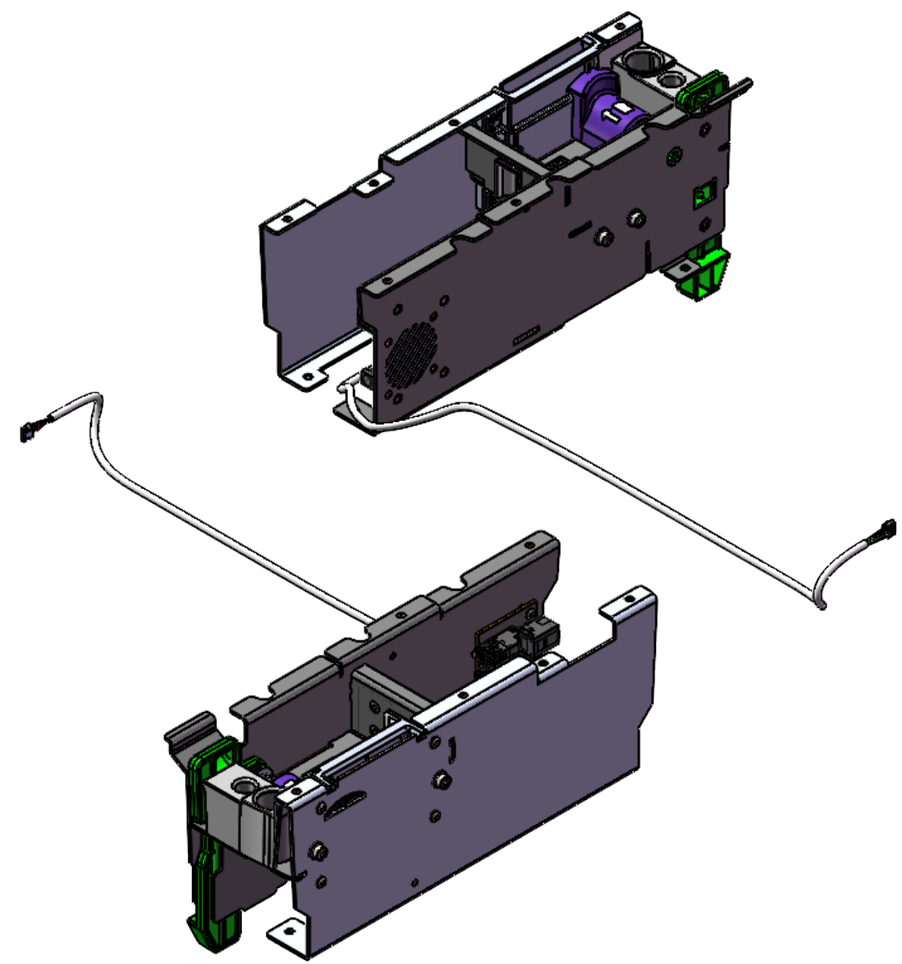

ITEM NO.	QTY.	PART NUMBER	DESCRIPTION
7	1	MYCABLEMART~FE-3MMPM-01MF	1.5FT 3.5mm MINI-STEREO TRS MALE TO FEMALE PANEL-MOUNT EXTENSION CABLE
6	1	P.I.ENGINEERING~XK-1283-UJS3-R	USB 3 SWITCH INTERFACE
5	4	VX~99-00113	WASHER, M4, ZINC-PLATED STEEL
4	4	VX~99-00106	M4X0.7PX6L, SHCS, ZINC-PLATED STEEL
3	1	VX~01-00007	ASSEMBLY, PANEL, POLLWORKER WITH BOLT
2	1	VX~01-00005	ASSEMBLY, SUBPANEL BRACKET, LEFT WITH LATCH
1	1	VX~01-00003	ASSEMBLY, SUBPANEL BRACKET, LEFT WITH CARD READER

MATERIAL: SEE BOM	UNLESS OTHERWISE SPECIFIED DIMENSIONS ARE IN MILLIMETERS DO NOT SCALE DRAWING	VotingWorks	
FINISH: NONE / AS FABRICATED	TOLERANCES: SEE NOTES		
COLOR: SEE BOM	THIRD ANGLE PROJECTION	DESCRIPTION: ASSEMBLY, SUBFRAME, USB LATCH CARD	
EST. WEIGHT: 500.90	APPROVED BY: EER		
ENGINEER: LPE	APPROVED DATE: 11/18/2024	PART NUMBER: VX~01-00087	REV. B
RELEASE DATE: 10/31/2024	CAD TYPE: MULTI PART ASSEMBLY	SIZE B / SCALE 1:3	SHEET 1 OF 1