**NOTES (UNLESS OTHERWISE SPECIFIED)**

1. INTERPRET PER ASME Y14.5-2009. DIMENSIONS IN mm.
2. MODEL & DRAWING REPRESENT FINISHED PART.
3. FOR GEOMETRY NOT EXPLICITLY DESCRIBED IN DRAWING REFER TO 3D DATABASE.
4. GENERAL TOLERANCES: ISO 2768-mK (SEE TABLE).
5. INSIDE CORNER RADII ≥ ½ MATL THK. BREAK SHARP EDGES 0.2–0.4 mm.
6. LASER-ETCH P/N, REV & MATL ID (3 mm H) APPROX. WHERE SHOWN.
7. INSTALL HARDWARE PER MANUFACTURER SPEC.
8. MATERIAL: AL 5052-H38, 1.52 mm THK PER ASTM B209.
9. FINISH: ANODIZE PER MIL-A-8625, TYPE II, CLASS 2 (**BLACK**), 8–12 µm THK. BREAK SHARP EDGES 0.2–0.4 mm BEFORE ANODIZE. (RoHS COMPLIANT)
10. NO-FINISH (MASK): MASK ALL SURFACES SHOWN IN RED BEFORE ANODIZE; NO RESIDUE

REVISIONS

| REV. | DESCRIPTION | CR # | DATE | SUBMITTED BY |
|---|---|---|---|---|
| A | INITIAL RELEASE | - | 10/08/2024 | GJK |
| B | ADJUST SCREWS FOR EASE OF ASSY. | - | 11/15/2024 | PAK |
| C | REMOVED FAN CUTOUT; DECREASE FLANGE LENGTH; ADD TAB SLOT; CHANGE PEM TO CLEARANCE | 26, 33, 81, 127 | 6/5/2025 | J.DEWALD |
| D | EDITED HARDWARE PN TO ZINC PLATED STEEL | 152 | 6/30/2025 | D.CHU |
| E | SHIFTED SHROUD TAB SLOT | 229 | 3/31/2026 | JDEWALD |

| ISO 2768 GENERAL TOLERANCES (mK) | |
|---|---|
| LINEAR DIMENSIONS – ISO 2768-1, CLASS m (mm) | |
| NOMINAL SIZE RANGE, L (mm) | PERMISSIBLE ± (mm) |
| 0.5 ≤ L ≤ 6 | 0.10 |
| 6 < L ≤ 30 | 0.20 |
| 30 < L ≤ 120 | 0.30 |
| 120 < L ≤ 400 | 0.50 |
| 400 < L ≤ 1000 | 0.80 |
| 1000 < L ≤ 2000 | 1.20 |
| 2000 < L ≤ 4000 | 2.00 |

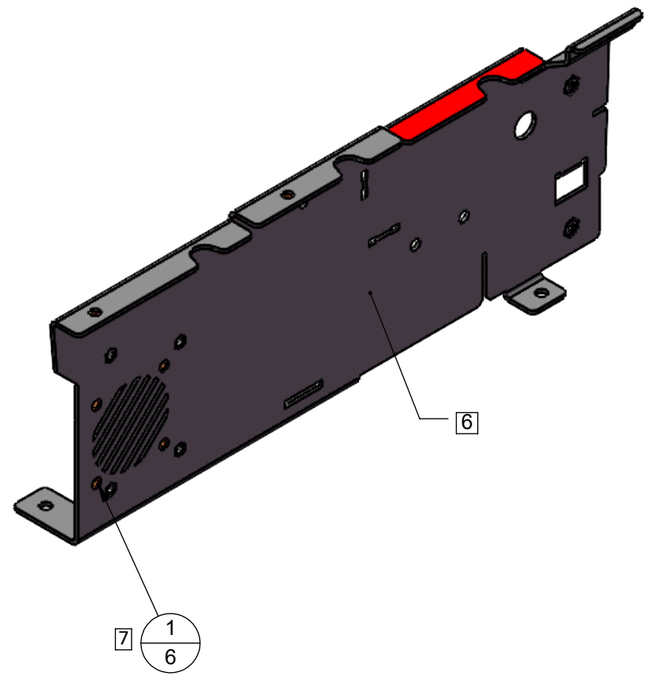


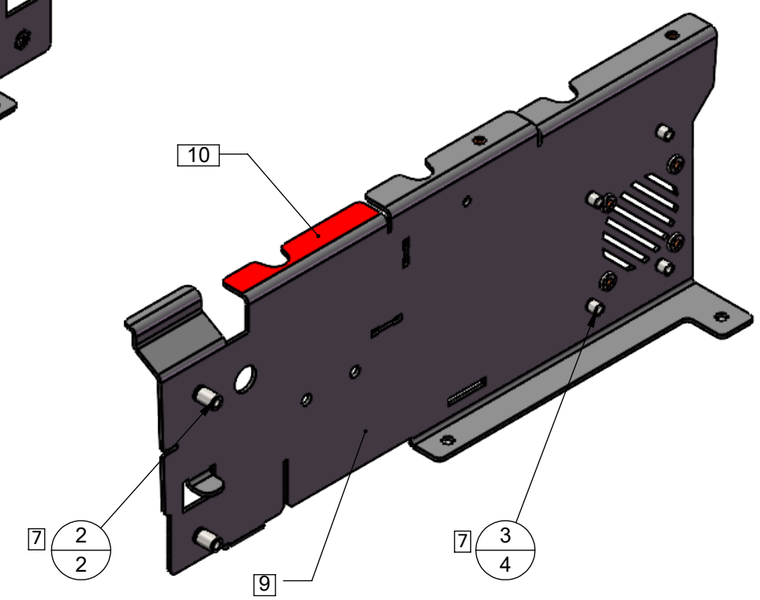


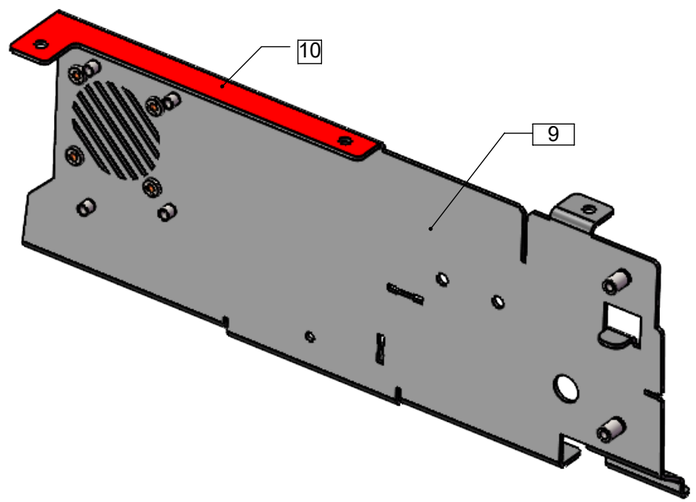


| ITEM NO. | VENDOR | VENDOR PN | DESCRIPTION | QTY. |
|---|---|---|---|---|
| 1 | PENNENGINEERING | S-M3-2ZI | M3X0.5P, NUT, SELF-CLINCHING | 6 |
| 2 | PENNENGINEERING | SO-3.5M3-10ZI | M3X0.5PX10L, THREADED STANDOFF | 2 |
| 3 | PENNENGINEERING | SO-M3-6ZI | M3X0.5PX6L, THREADED STANDOFF | 4 |

| | | | | |
|---|---|---|---|---|
| MATERIAL: SEE NOTES | UNLESS OTHERWISE SPECIFIED DIMENSIONS ARE IN MILLIMETERS DO NOT SCALE DRAWING | VotingWorks | | |
| FINISH: OTHER - SEE NOTES | TOLERANCES: SEE NOTES | | | |
| COLOR: SEE NOTES | THIRD ANGLE PROJECTION | DESCRIPTION: SUBPANEL BRACKET, LEFT, INTERIOR | | |
| EST. WEIGHT: 122.76 | APPROVED BY: PAK | | | |
| ENGINEER: GJK | APPROVED DATE: 11/15/2024 | PART NUMBER: VX~02-00027 | | REV. E |
| RELEASE DATE: 10/31/2024 | CAD TYPE: EMBEDDED HARDWARE ASSEMBLY | SIZE: B | SCALE: 1:2 | SHEET: 1 OF 3 |

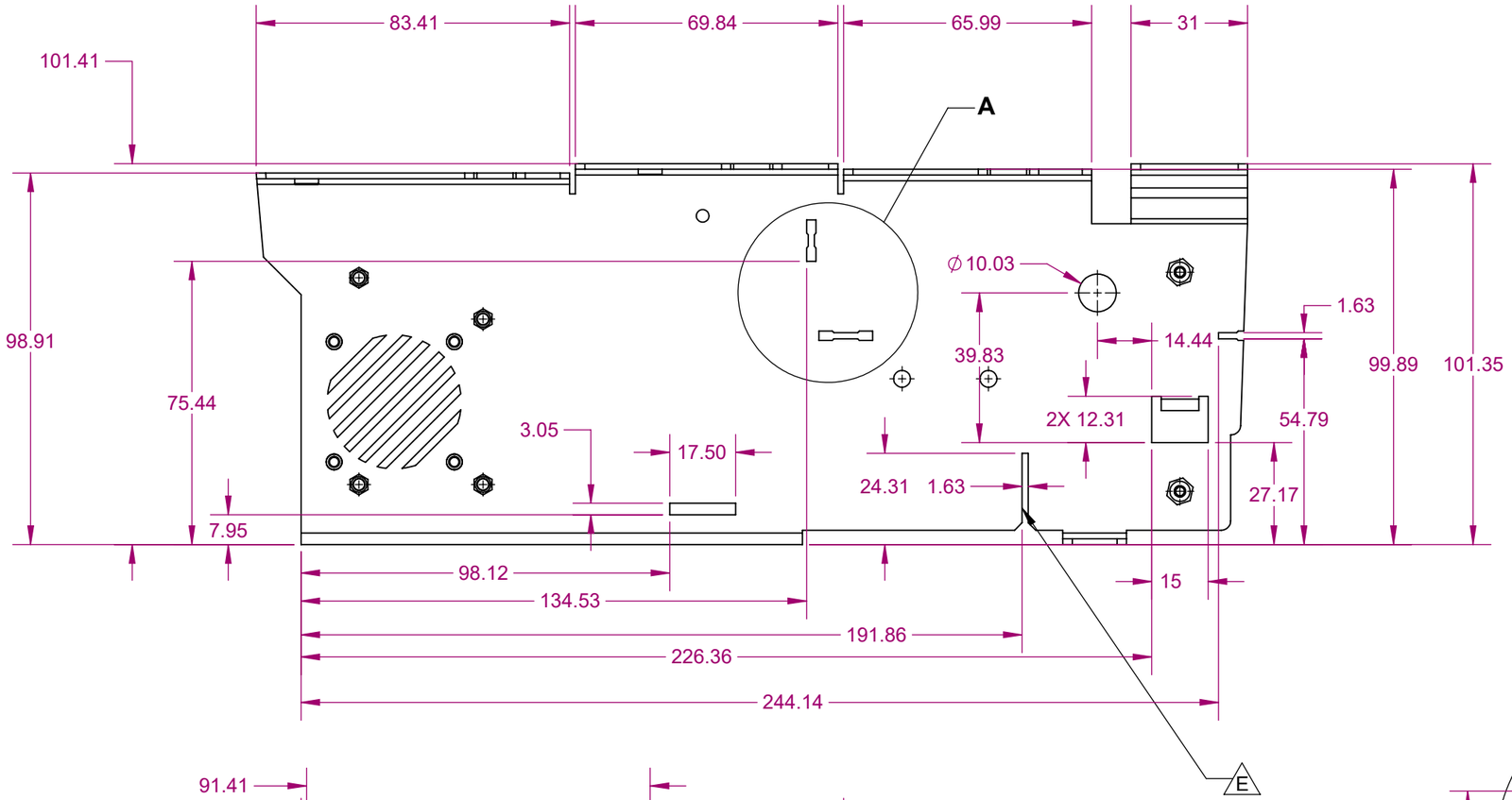


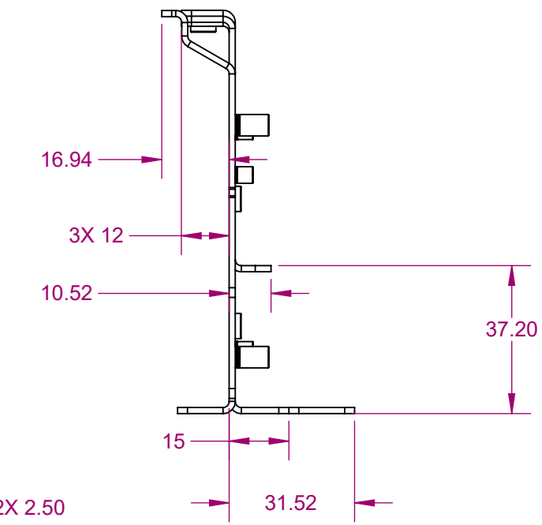


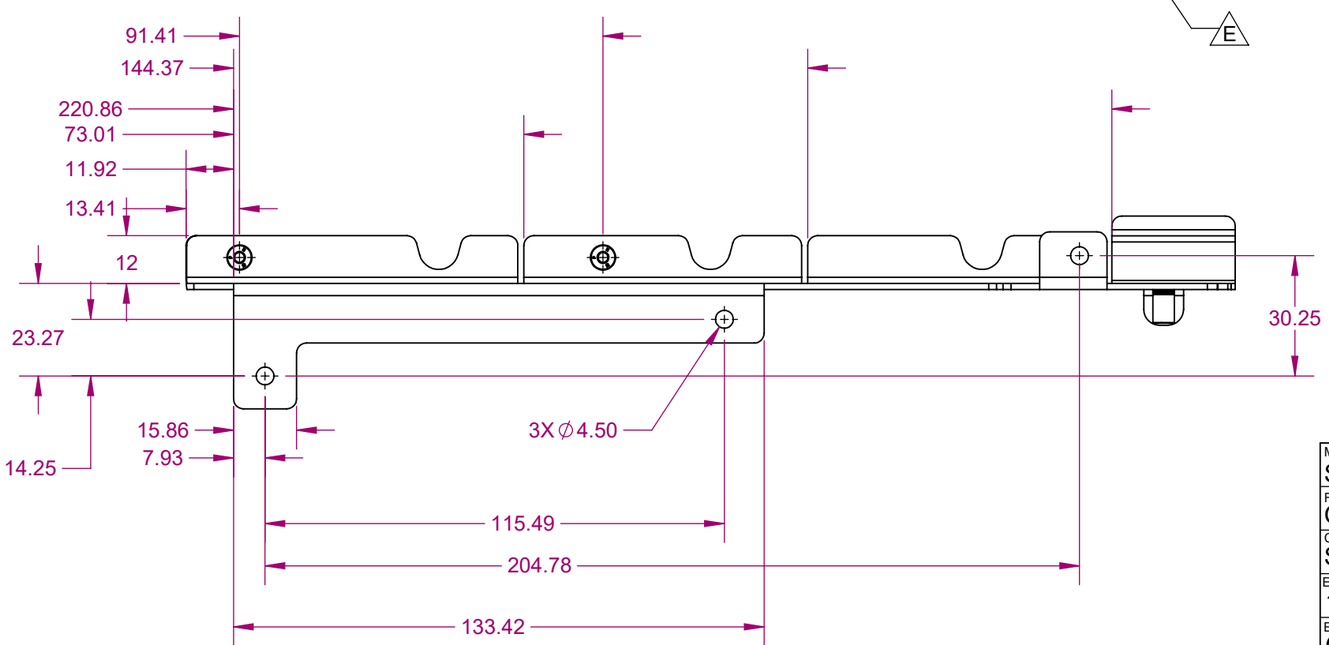


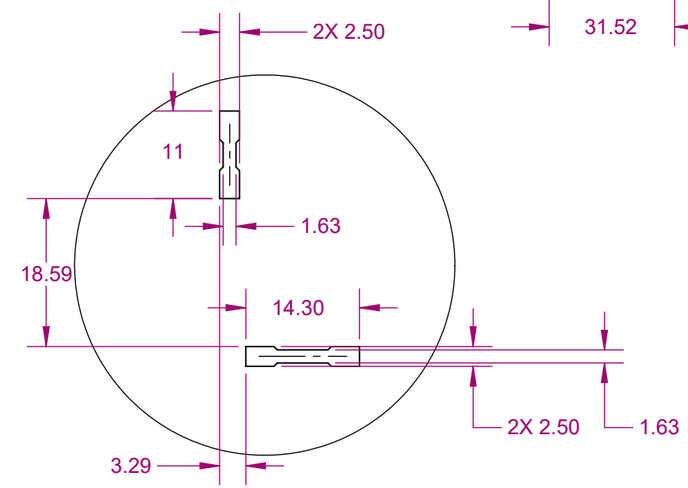


**DETAIL A**
**SCALE 4 : 3**

| | | |
|---|---|---|
| MATERIAL: SEE NOTES | UNLESS OTHERWISE SPECIFIED DIMENSIONS ARE IN MILLIMETERS DO NOT SCALE DRAWING | VotingWorks |
| FINISH: OTHER - SEE NOTES | TOLERANCES: SEE NOTES | |
| COLOR: SEE NOTES | THIRD ANGLE PROJECTION | DESCRIPTION: SUBPANEL BRACKET, LEFT, INTERIOR |
| EST. WEIGHT: 122.76 | APPROVED BY: PAK | |
| ENGINEER: GJK | APPROVED DATE: 11/15/2024 | PART NUMBER: VX~02-00027 — REV.: E |
| RELEASE DATE: 10/31/2024 | CAD TYPE: EMBEDDED HARDWARE ASSEMBLY — SIZE: B — SCALE: 2:3 | SHEET: 2 OF 3 |

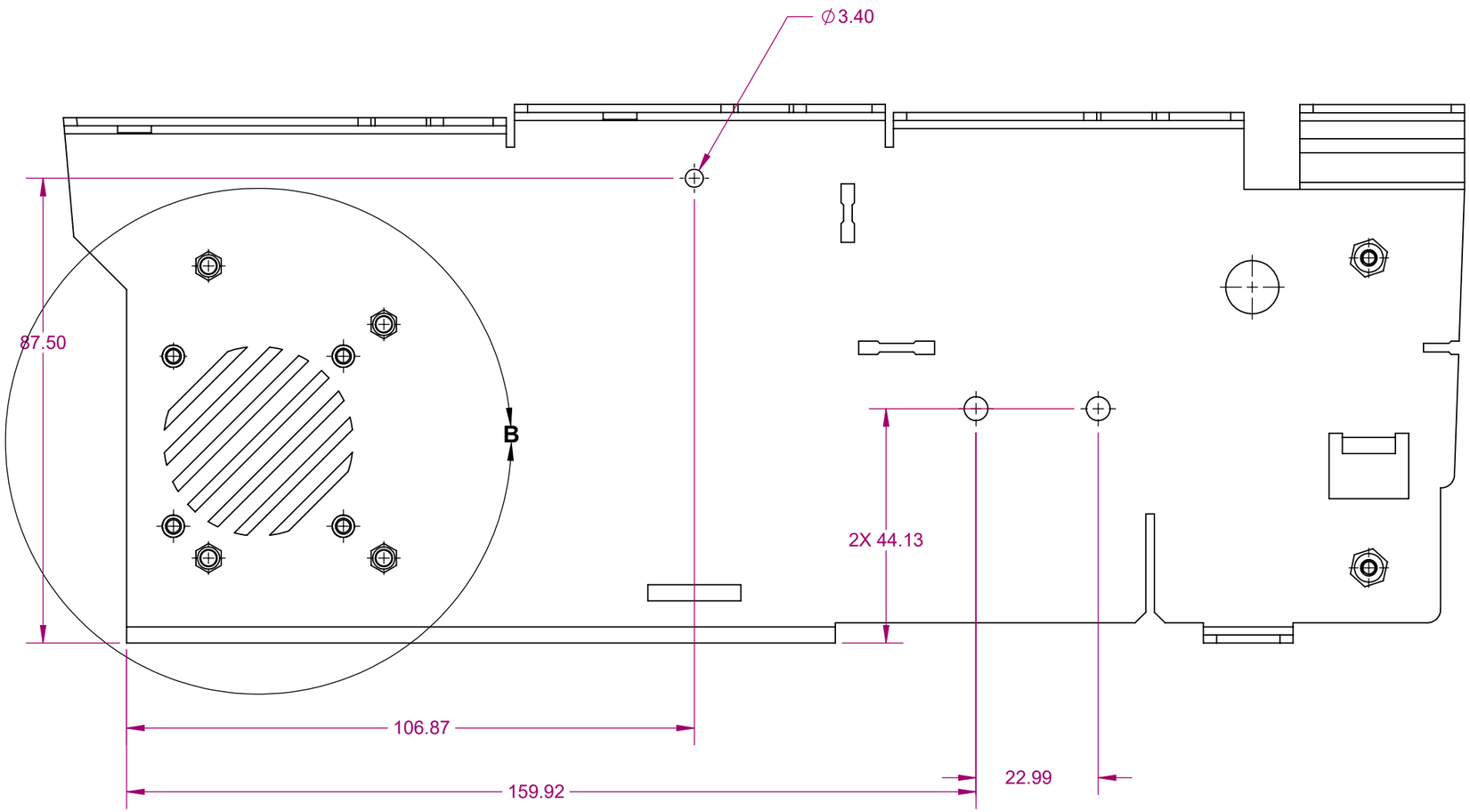


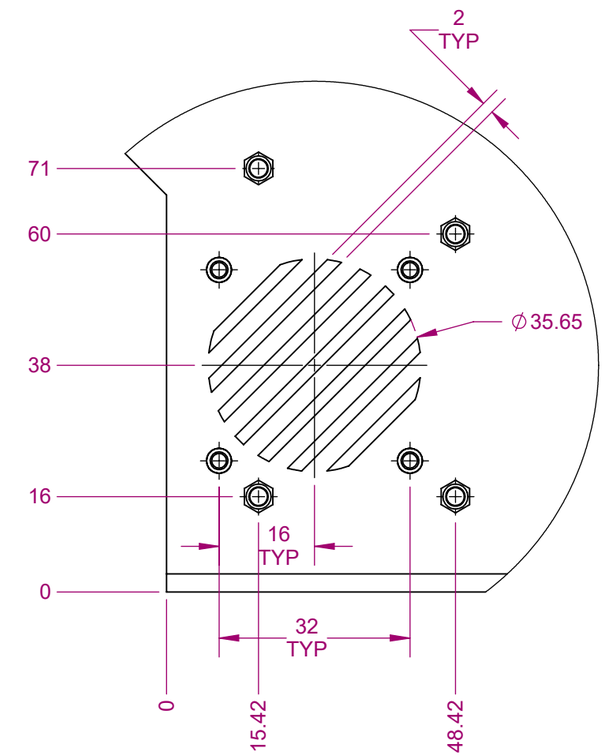


**DETAIL B**

| | | |
|---|---|---|
| MATERIAL<br>SEE NOTES | UNLESS OTHERWISE SPECIFIED DIMENSIONS ARE IN MILLIMETERS DO NOT SCALE DRAWING | VotingWorks |
| FINISH<br>OTHER - SEE NOTES | TOLERANCES: SEE NOTES | |
| COLOR<br>SEE NOTES | THIRD ANGLE PROJECTION | DESCRIPTION<br>SUBPANEL BRACKET, LEFT, INTERIOR |
| EST. WEIGHT<br>122.76 | APPROVED BY<br>PAK | |
| ENGINEER<br>GJK | APPROVED DATE<br>11/15/2024 | PART NUMBER<br>VX~02-00027 — REV. E |
| RELEASE DATE<br>10/31/2024 | CAD TYPE<br>EMBEDDED HARDWARE ASSEMBLY — SIZE B — SCALE 2:2 | SHEET 3 OF 3 |