UCTRONICS®

Smart Bluetooth Robot Car Kit for Arduino

User Guide

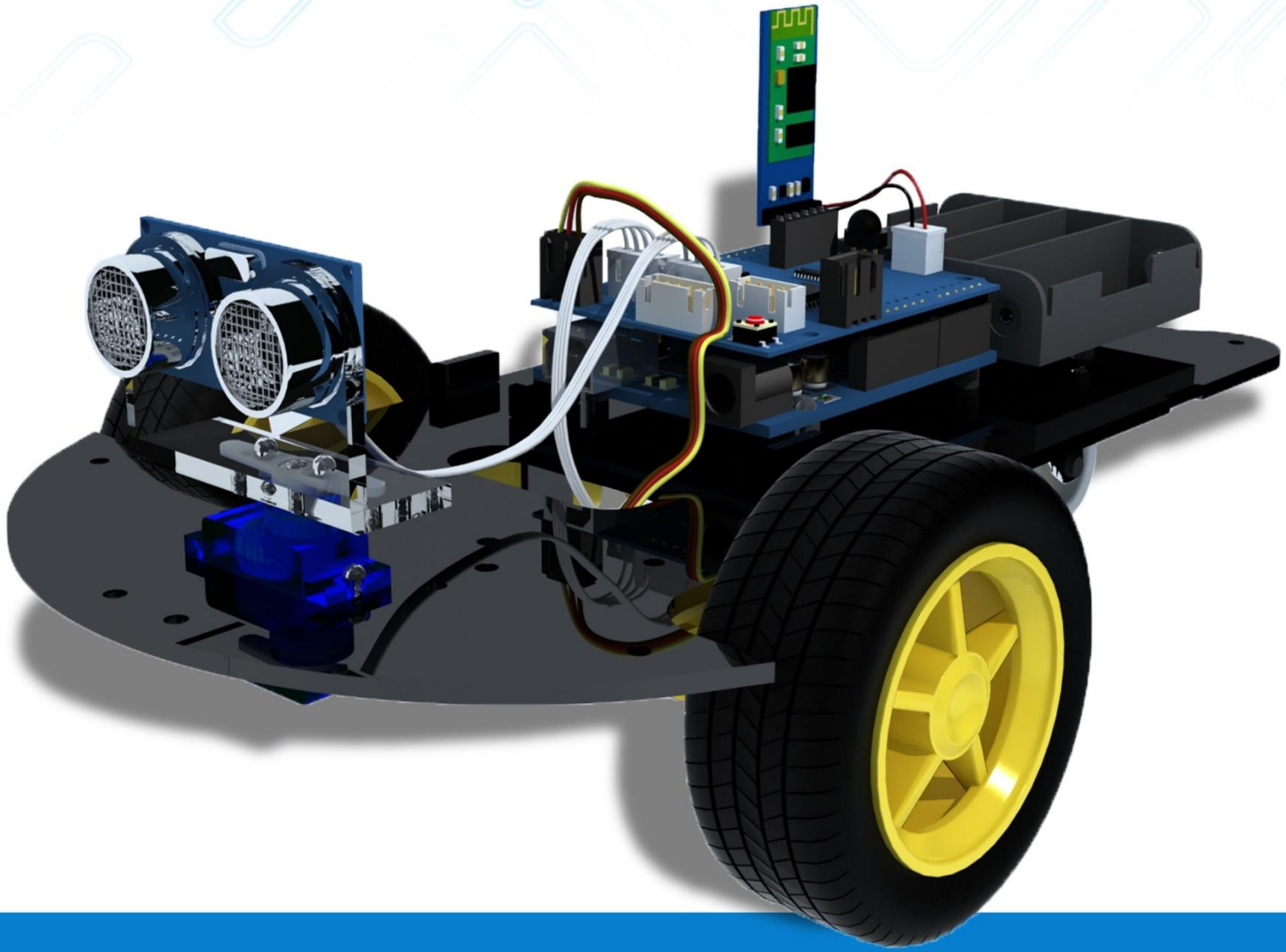

UCTRONICS

Table of Contents

1. Introduction 4
1.1 Packing list 5
2. Parts Introduction 6
2.1 Uno R3 Board for Arduino 6
2.1.1 Specifications 6
2.2 HC-SR04 Ultrasonic Sensor Module with Bracket / Holder 7
2.2.1 Working Principle 7
2.2.2 Specification 8
2.2.3 Wiring diagram: 9
2.3 L293D Motor Drive Expansion Board for Arduino 9
2.3.1 Specification 9
2.4 SG90 9g micro small servo motor 10
2.4.1 Specification 10
2.5 2WD Driver Motor Robot Smart Car Chassis Kits 11
2.5.1 Specification 12
2.6 HC-05 Bluetooth Serial transmission Wireless Module 12
2.6.1 Specification 12
2.6.2 Pin definition 13
2.6.3 Application: 13
2.7 Infrared IR Wireless Remote Control Sensor Module Kits 14
2.7.1 Specification 14
2.7.2 Dimension 15
3. Pin Definition 16
4. Wiring 17
5. Installation 18
5.1 Installation of the Car 18
5.2 Wire Connection 27
6. Key Value for Remote Controller 31

7. Start Programing.....32
7.1 Install Arduino IDE.....32
7.2 Add Libraries.....36
8. Bluetooth App for Android.....39
Step 1: Download and Install App.....39
Step 2: Open UCTRONICS_Car_Controller software, the default is Bluetooth Mode.....40
Step 3: Click the top right and choose 'Connected device'.....40
Step 4: Select 'CAR CONTROL MODE'.....41
Step 5: Search Bluetooth Device.....41
Step 6: Enter control menu.....42

1. Introduction

The UCTRONICS Smart Bluetooth Robot Car Kit is a flexible vehicular kit particularly designed for education, competition and entertainment.

The kit has an intelligence built in so that it guides itself whenever an obstacle comes ahead of it. An Arduino development is used to achieve the desired operation. With the help of a small servo motor, it scans the area left and right in order to find the best way to turn. An ultrasonic sensor unit is used to detect any obstacle ahead of it that sends a command to the Arduino Board. Depending on the input signal received, the Arduino microcontroller redirects the robot to move in an alternate direction by appropriately actuating the motors interfaced to it through a motor driver IC.

When all the necessary components are getting together, a robot car comes up!

A robot is a machine that can perform some task automatically or with guidance. Robotics is generally a combination of computational intelligence and physical machines (motors). Due to their high level of performance and reliability, the robot gets the splendid popularity in our daily life.

Come up; let's go into a Robot World!

1.1 Packing list

- 1pcs UNO R3 Board for Arduino
- 1pcs HC-SR04 Ultrasonic Sensor Module
- 1pcs Holder for HC-SR04
- 1pcs L293D Motor Drive Expansion Board
- 1pcs 9g micro servo motor
- 1pcs Infrared IR Wireless Remote Control Sensor Module Kits
- 1pcs HC-05 Bluetooth Serial transmission Wireless Module
- 1pcs cable
- 1set Car Chassis Kits:
  - 2pcs 65mm tire Wheels
  - 2pcs Geared Motors (1:48)
  - 1pcs Universal Wheel
  - 1pcs Battery Container
  - 1pcs Car Chassis
  - Screws+ Nuts

2. Parts Introduction

2.1 Uno R3 Board for Arduino

This is the new Uno R3 board for Arduino. In addition to all the features of the previous board, the Uno now uses an ATmega 16U2 instead of the 8U2 found on the Uno (or the FTDI found on previous generations). This allows for faster transfer rates and more memory. No drivers needed for Linux or Mac (.inf file for Windows is needed and included in the Arduino IDE), and the ability to have the Uno show up as a keyboard, mouse, joystick, etc.

The Uno R3 also adds SDA and SCL pins next to the AREF. In addition, there are two new pins placed near the RESET pin. One is the IOREF that allow the shields to adapt to the voltage provided from the board. The other is a not connected and is reserved for future purposes. The Uno R3 works with all existing shields but can adapt to new shields which use these additional pins.

Note: The Uno R3 requires the Arduino 1.0 drivers folder in order to install properly on some computers. We have tested and confirmed that the R3 can be programmed in older versions of the IDE. However, the first time using the R3 on a new computer, you will need to have Arduino 1.0 installed on that machine. If you are interested in reading more about the changes to the IDE, check out the official Arduino 1.0 Release notes!

2.1.1 Specifications

- Microcontroller: ATmega328
- Operating Voltage: 5V

- Input Voltage (recommended): 7V-12V
- Input Voltage (limits): 6V-20V
- Digital I/O Pins: 14 (of which 6 provide PWM output)
- Analog Input Pins: 6
- DC Current per I/O Pin: 40 mA
- DC Current for 3.3V Pin: 50 mA
- Flash Memory: 32 KB (ATmega328) of which 0.5 KB used by bootloader
- SRAM: 2 KB (ATmega328)
- EEPROM: 1 KB (ATmega328)
- Clock Speed: 16 MHz

2.2 HC-SR04 Ultrasonic Sensor Module with Bracket / Holder

The HC-SR04 ultrasonic sensor module for Arduino is used for obstacle detection. Ultrasonic sensor transmits the ultrasonic waves from its sensor head and again receives the ultrasonic waves reflected from an object.

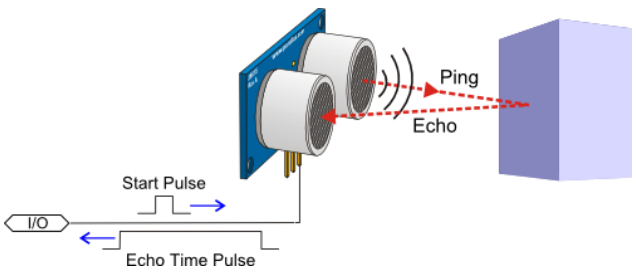

Ultrasonic sensor general diagram

2.2.1 Working Principle

The ultrasonic sensor emits the short and high frequency signal. These propagate in the air at the velocity of sound. If they hit any object, then they reflect back echo signal to the sensor. The ultrasonic sensor consists of a multi vibrator, fixed to the base. The multi vibrator is combination of a resonator and vibrator. The resonator delivers ultrasonic wave generated by the vibration. The ultrasonic sensor actually consists of two parts; the emitter which produces a 40 kHz sound wave and the detector detects 40 kHz sound wave and sends electrical signal back to the microcontroller.

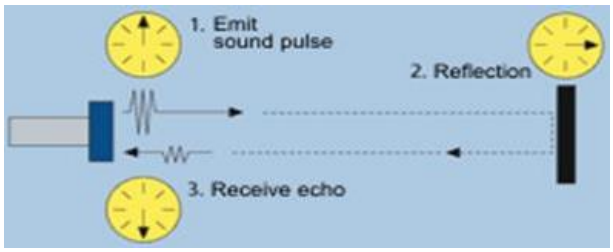

Ultrasonic working principle

The ultrasonic sensor enables the robot to virtually see and recognize object, avoid obstacles, measure distance. The operating range of ultrasonic sensor is 2 cm to 450 cm.

2.2.2 Specification

- Working Voltage: 5V DC
- Static current: < 2mA
- Output signal: Electric frequency signal
- Output Voltage: 0V-5V
- Sensor angle: <= 15°
- Detection distance: 2-450cm
- High precision: Up to 0.3cm
- Input trigger signal: 10us TTL impulse
- Echo signal: output TTL PWL signal
- Mode of connection: VCC, trig (T), echo, GND
- Using method:

  (1) Supply module with 5V

  (2) Output will be 5V while obstacle in range, otherwise it will be 0V
- Item size: 44x20x15mm

2.2.3 Wiring diagram:

HC-SR04 Ultrasonic Sensor Module	Arduino
VCC	5V
Trig	A2
Echo	A3
GND	GND

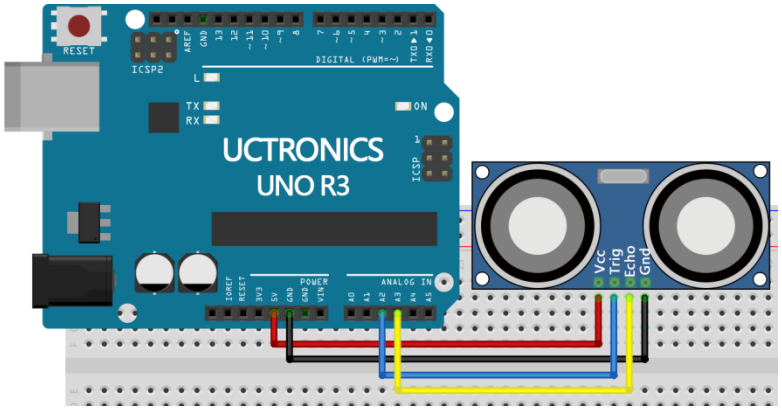

2.3 L293D Motor Drive Expansion Board for Arduino

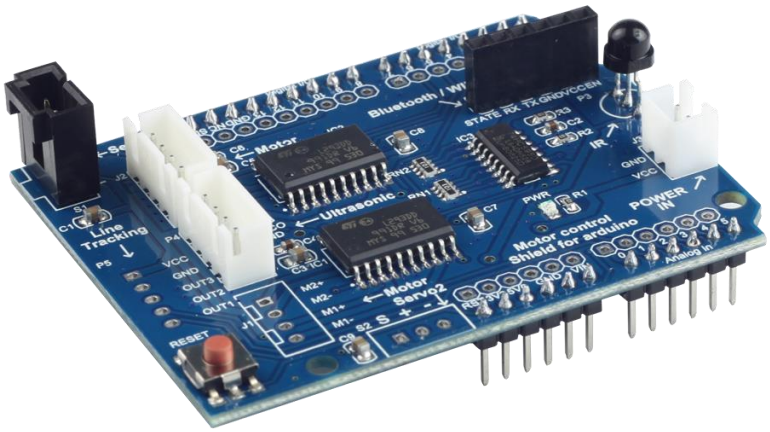

This is a commonly used DC motor drive module, using L293D chip with small current DC motor driver. The pins are made compatible with Arduino which is easy to use.

2.3.1 Specification

- 2 connections for 5V servos connected to the Arduino's high-resolution dedicated timer

- Up to 4 bi-directional DC motors with 4 PWM speed regulation
- Up to 2 stepper motor control, single / double step control, staggered or microstepping and rotation angle control
- 4 H-Bridges: L293D chipset provides 0.6A per bridge (1.2A peak) with thermal shutdown protection, 4.5V to 36V
- Pull down resistors to keep motors in the state of rest during power-up
- All module interfaces have been modified with XH2.54 ports as to make it much easier and convenient to assemble the car.
- With Arduino reset button

Voltage	DC 3V	DC 5V	DC 6V
Current	100MA	100MA	120MA
Reduction rate	48:1		
RPM (with tire)	100	190	240
Tire Diameter	66mm		
Car Speed (M/minute)	20	39	48
Motor Weight (g)	50		
Motor Size (mm)	70x22x18mm		
Noise	<65dB		

2.4 SG90 9g micro small servo motor

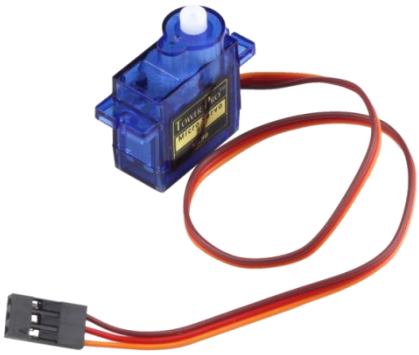

SG90 9g micro small servo motor is the main source of controlling action of the remote-control model. The module is widely applied in the field of fixed wing, helicopter, gliding, small robot, manipulator model.

2.4.1 Specification

- Size: 23x12.2x29 mm

- Torsional moment: 1.5kg/cm
- Working voltage: 4.2V-6V
- Temperature range: 0℃-55℃
- Operating speed: 0.1 seconds /60°
- Dead band width: 10 microseconds

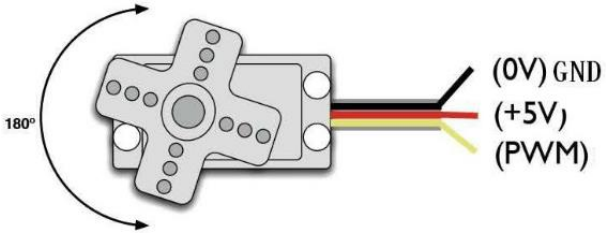

2.5 2WD Driver Motor Robot Smart Car Chassis Kits

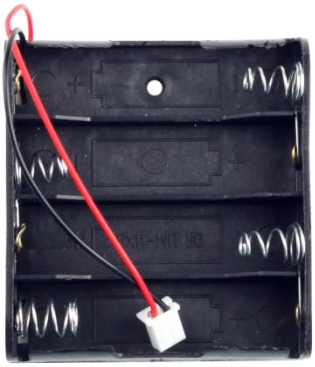

With the car platform, adding micro-controller (such as Arduino) and sensor modules, then program it, a robot car comes up.

All the module interfaces have been modified with XH2.54 ports as to make it much easier and convenient to assemble the car.

2.5.1 Specification

- With battery container
- Gear Motor reduction radio: 48:1
- Apply in distance measurement, velocity

2.6 HC-05 Bluetooth Serial transmission Wireless Module

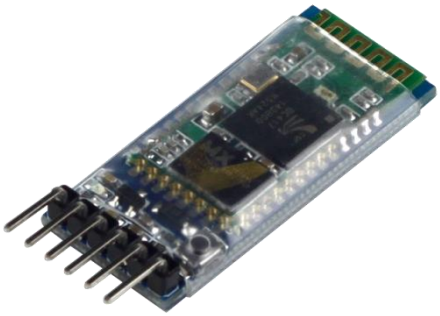

This module is mainly used in the field of wireless transmission of data over short distances. It can be easily connected to PC Bluetooth device and also can exchange data between two modules. Direct serial cable replacement avoids the cumbersome cable connections.

2.6.1 Specification

- Interface: VCC, GND, TXD, RXD, KEY, STATE (Note: The Pin for STATE, low output when unconnected, high out when after the connection)
- LED indicates the connection state of the Bluetooth, quick flash indicates no connection, slow flash indicates the module enter into the AT mode, double flash indicates the successfully connection of the Bluetooth and the open port
- The bottom plate is set to an anti-reverse diode with 3.3V LDO, the input voltage 3.6-6V, unpaired current is 30mA, 10mA after pairing, the input voltage is prohibited more than 7V

- Interface level 3.3V which can be directly connected to a variety of single-chip (51, AVR, PIC, ARM, MSP430, etc.), 5V microcontrollers can also be directly connected which cannot pass through MAX232 chip
- Available to pull the 34 feet into the AT command mode setting parameters and searching information
- Available to use AT command to switch to the host or slave mode and connect to the specified device
- Baud rate: 4800bps ~ 1382400bps
- Size: 3.57x1.52cm

2.6.2 Pin definition

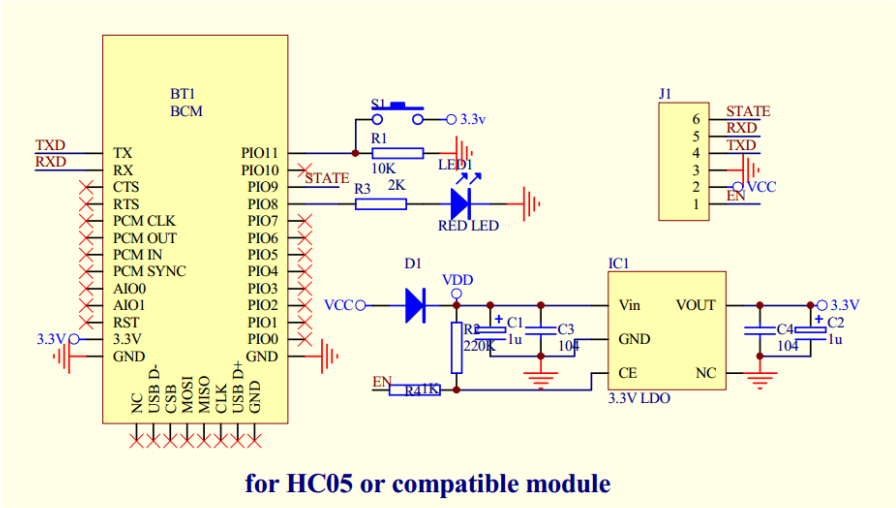

for HC05 or compatible module

2.6.3 Application:

- Bluetooth printers, wireless data collection, Bluetooth remote control toys, automotive testing equipment, industrial control, telemetry, Bluetooth wireless data transmission traffic, underground location, alarm
- POS systems, wireless keyboard, mouse, automation, data acquisition systems, wireless data transmission, the banking system, the government lights energy-saving equipment, interactive television program, voting equipment, wireless LED display system
- Bluetooth joystick, Bluetooth game controller, intelligent home, industrial control, building automation, security, wireless monitoring and control room equipment, access control systems

2.7 Infrared IR Wireless Remote Control Sensor Module Kits

The wireless infrared remote controlling kits by mini ultra-thin infrared remote controller and LF0038M infrared receiving module, mini slim infrared remote control with 17 function keys and launch the farthest distance up to 8 meters, it is suitable for the indoor control a variety of devices. The infrared receiving module can receive the remote control signal which is modulated by the standard 38 KHz and the decoding operation of the remote control signal can be realized by programming the remote control signal.

Note: The LF0038M infrared receiving module was soldered in the L293D motor drive expansion board.

2.7.1 Specification

Remote control:

- 8 address bit, 8 order bit
- Carrier frequency: 38kHz
- Transmission Distance: up to 8m
- Sticking material: 0.125mmPET
- Lift cycle: 20,000 times

LF0038M infrared receiver:

- Operating voltage: 2.7V-5.5V
- Receiving distance: 15m-18m
- Output: TTL, CMOS level, active low
- Anti-dry ability
- Epoxy plastic encapsulation

2.7.2 Dimension

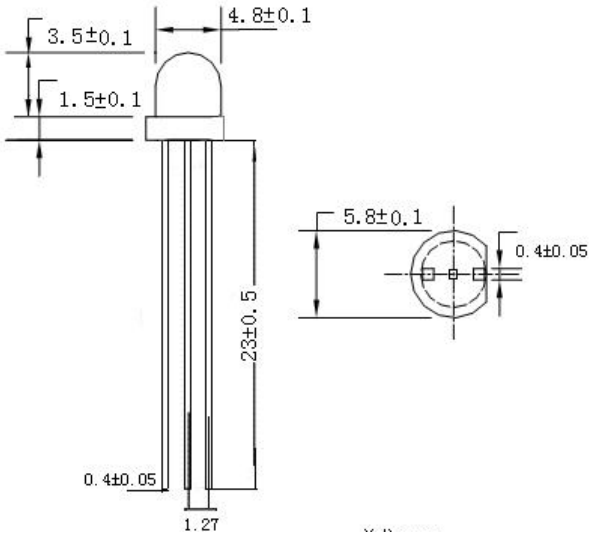

Infrared receiver

3. Pin Definition

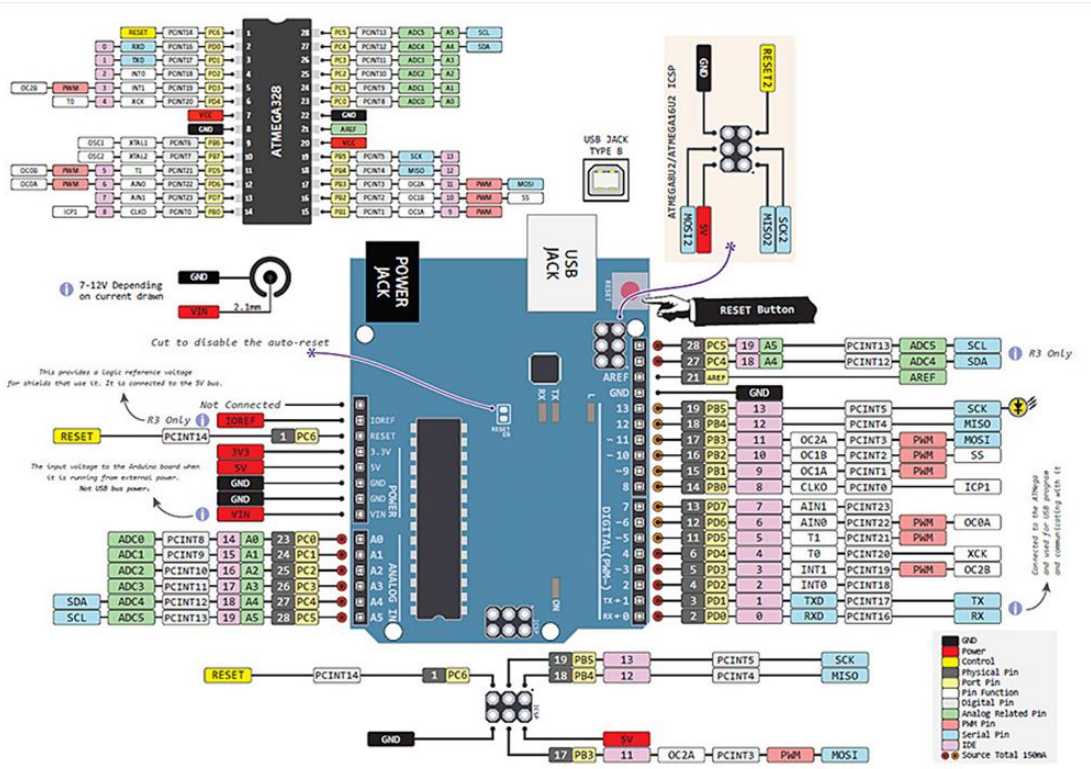

Arduino UNO R3 Board

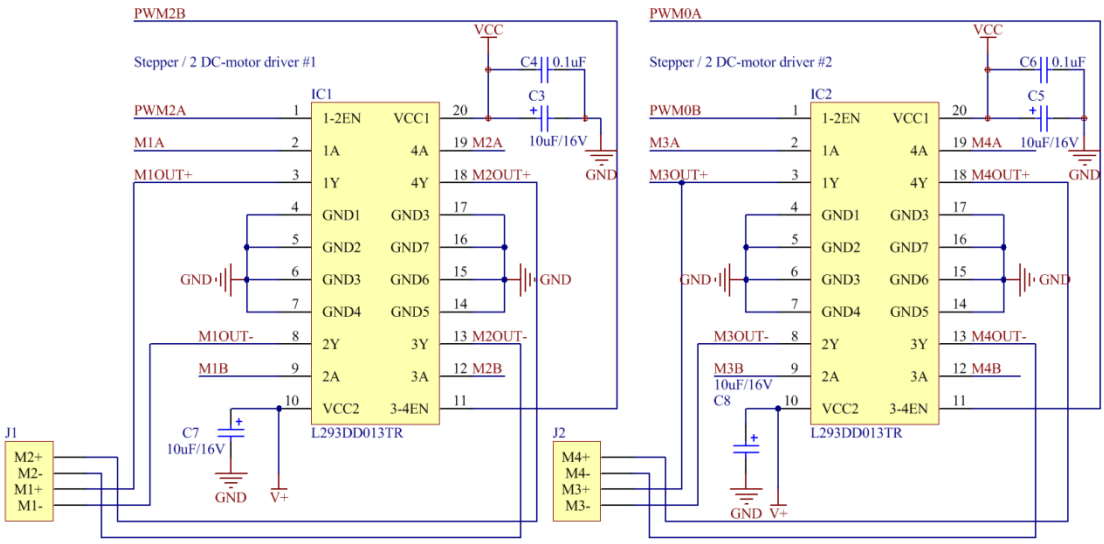

L293D Motor Drive Expansion Board

4. Wiring

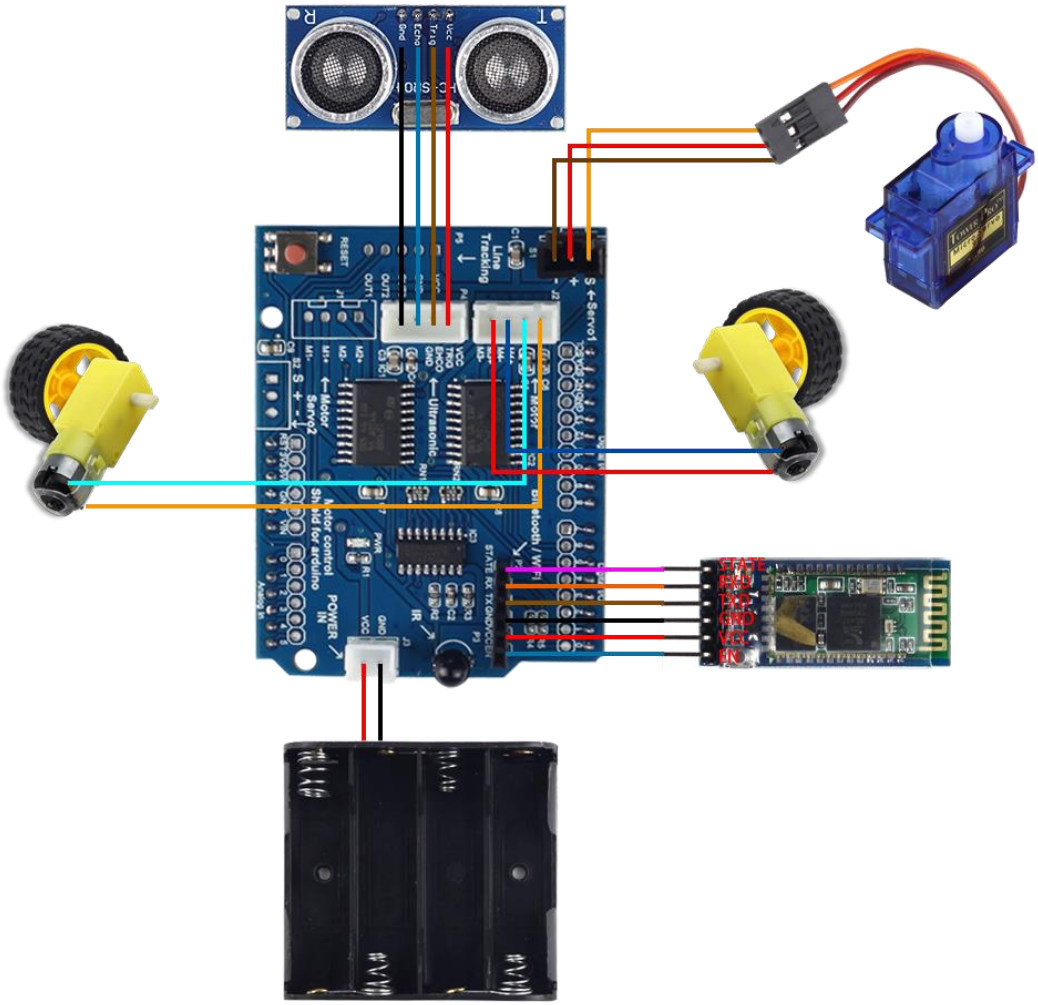

5. Installation

5.1 Installation of the Car

Step 1: Install the deceleration DC motor

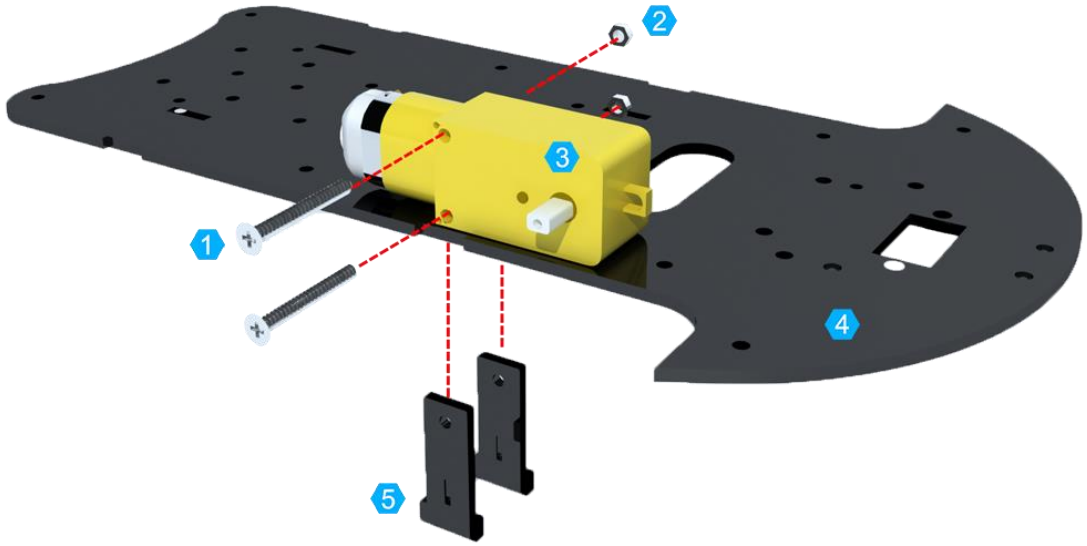

1 4 X M3*30 round head screws
2 4 X M3 nuts
3 2 X DC motor
4 1 X Chassis
5 4 X T-type fastener
Note: Make sure each motor is installed in the correct direction

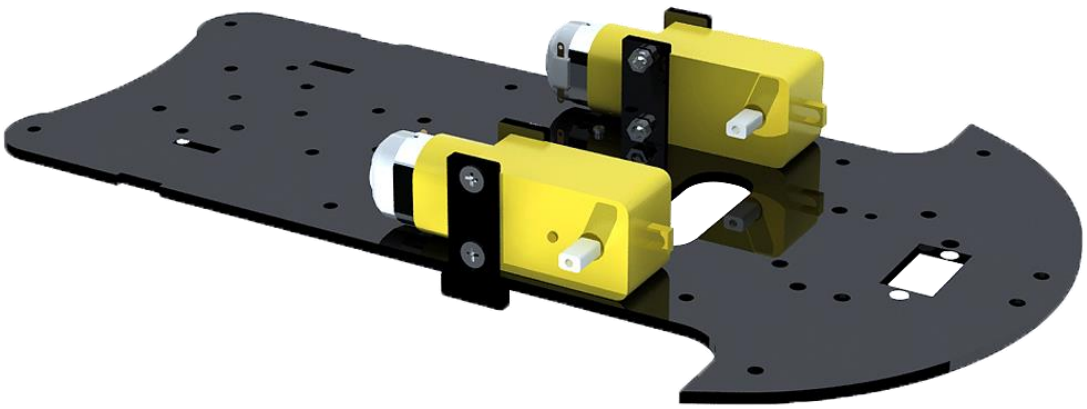

Step 2: Fix the wheel

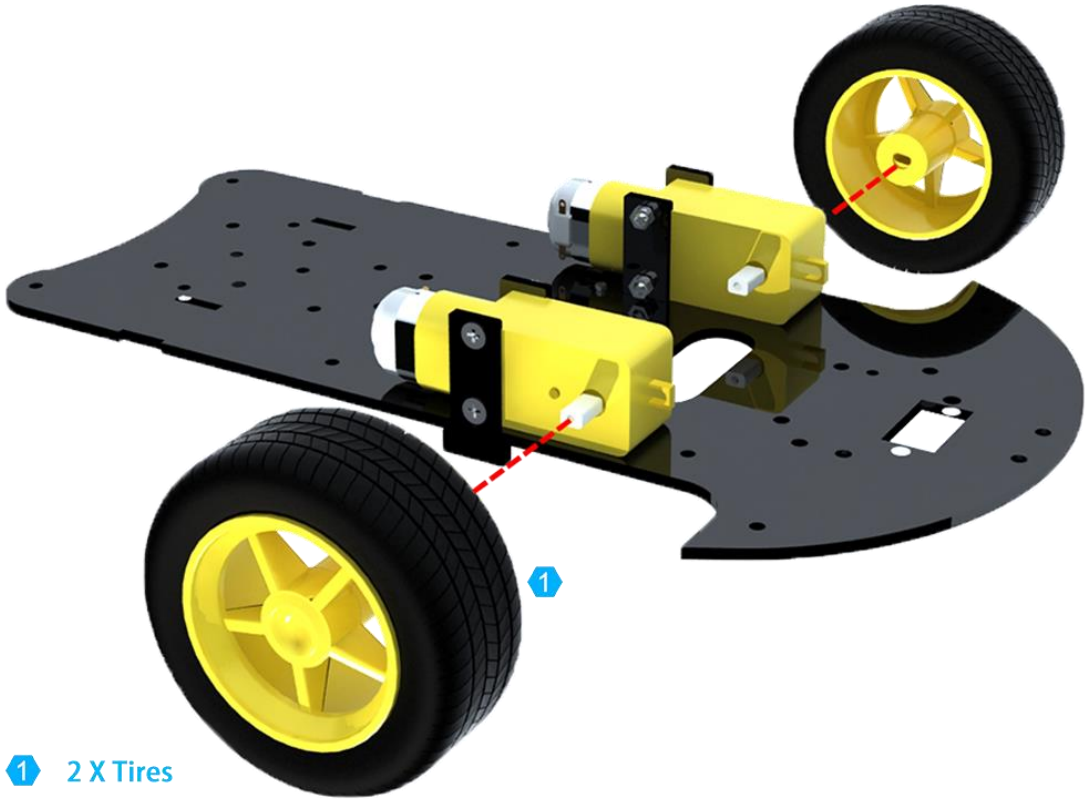

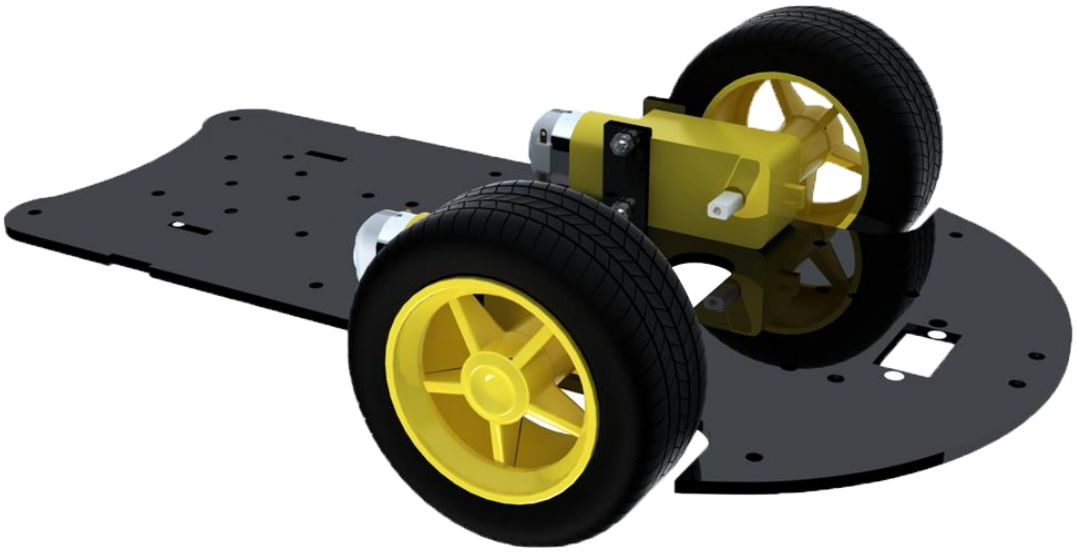

Step 3: Install the hammer caster

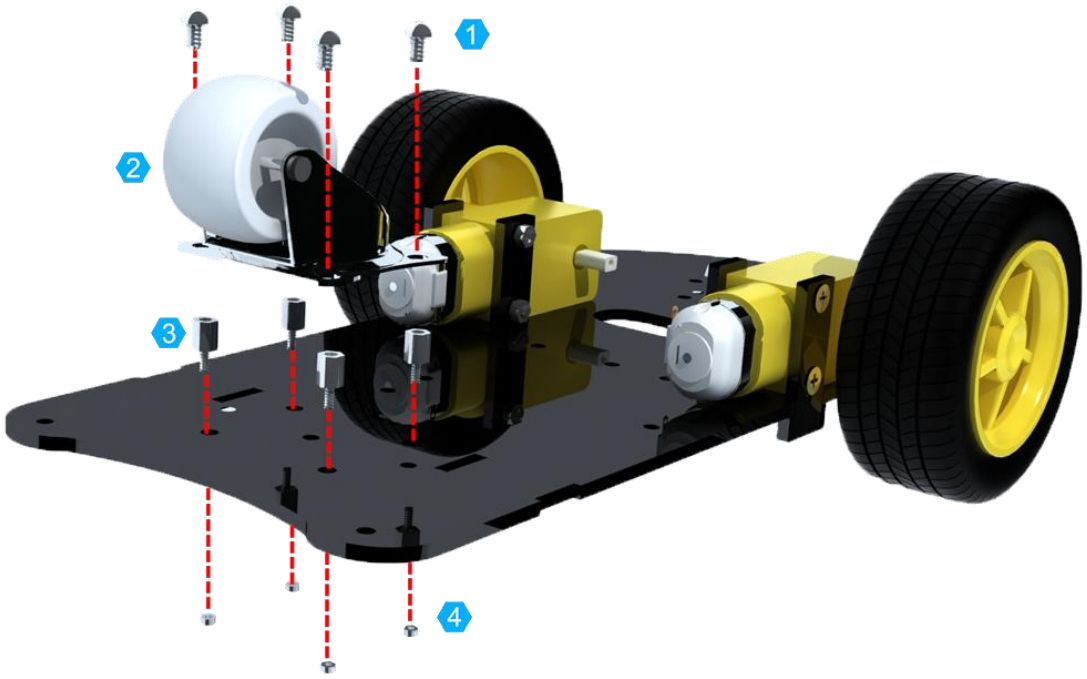

1 4 X M3*6 round head screws
2 1 X Hammer caster
3 4 X M3*6 socket screws
4 4 X M3 nuts

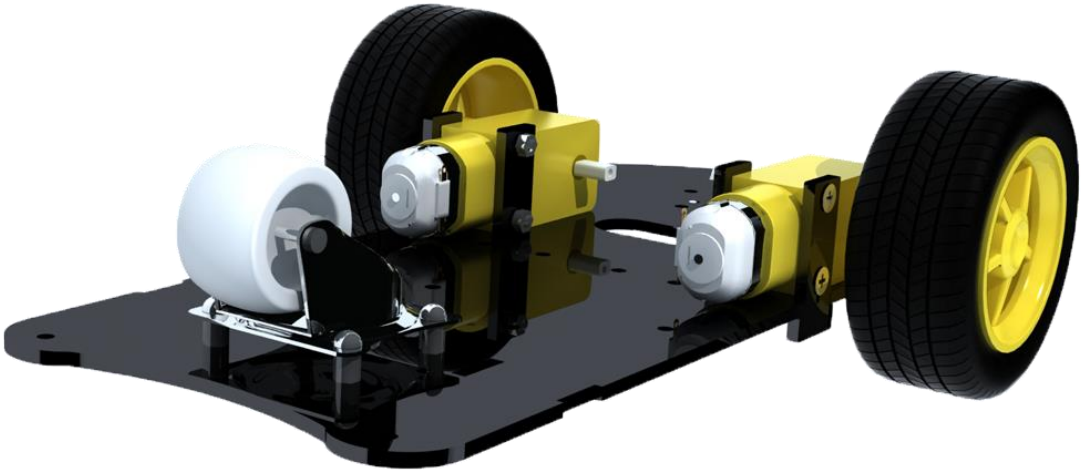

Step 4: Install the battery container

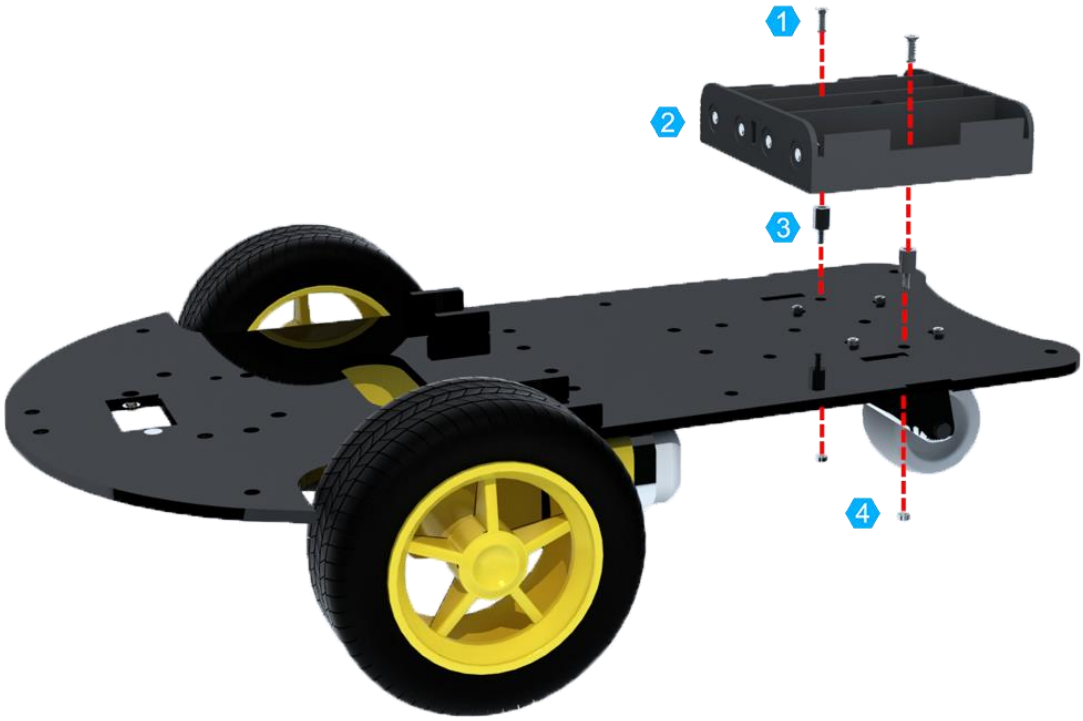

1. 2 X M3*6*4 countersunk head screws
2. 1 X Battery container
3. 2 X M3*6 socket screws
4. 2 X M3 nuts

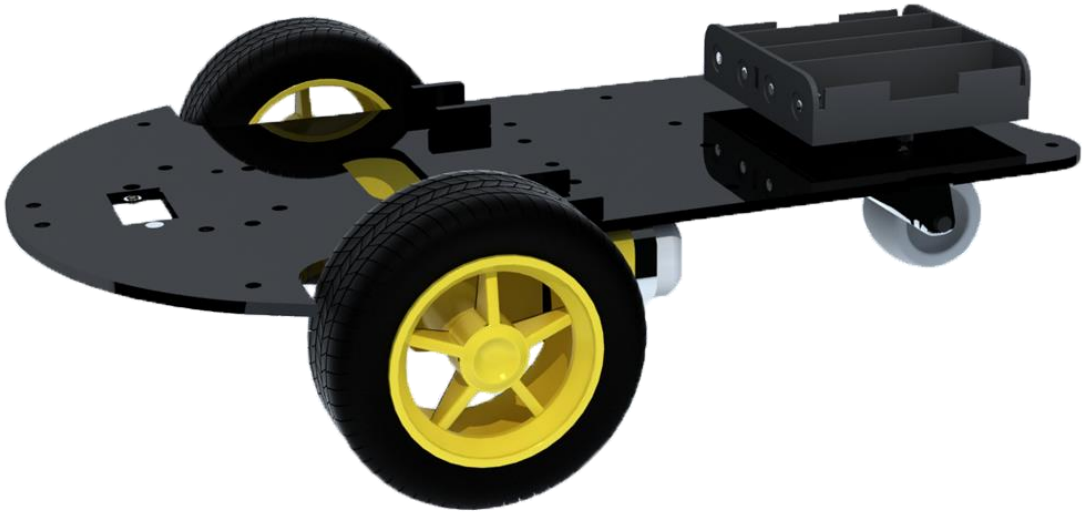

Step 5: Install the micro servo motor

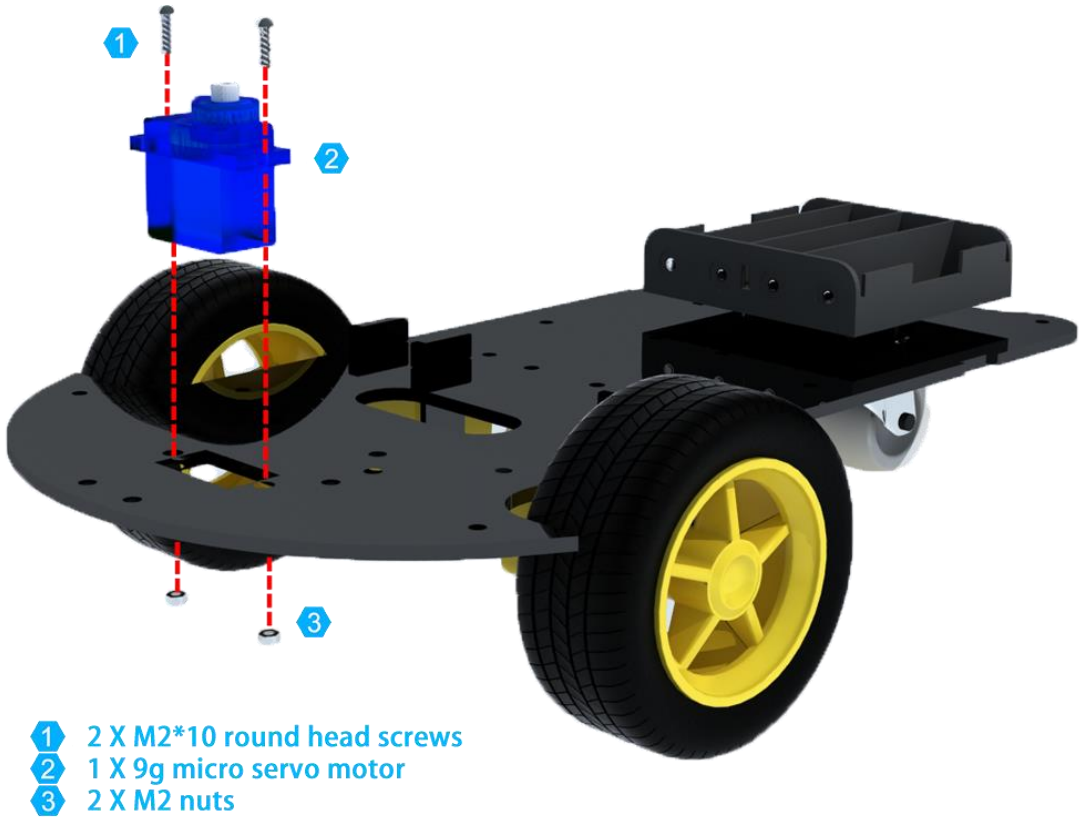

1 2 X M2*10 round head screws
2 1 X 9g micro servo motor
3 2 X M2 nuts

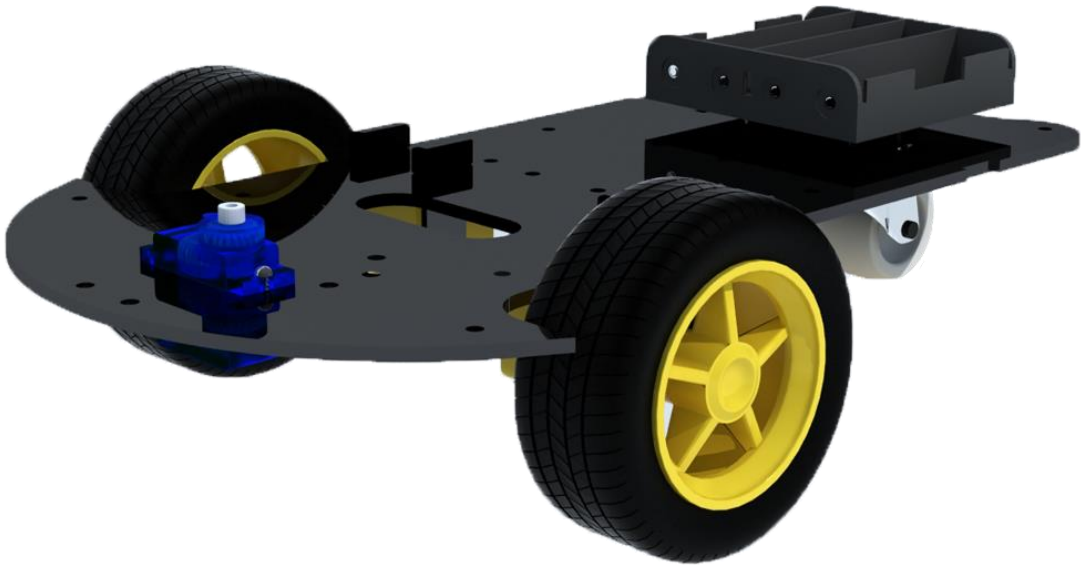

Step 6: Install the ultrasonic module

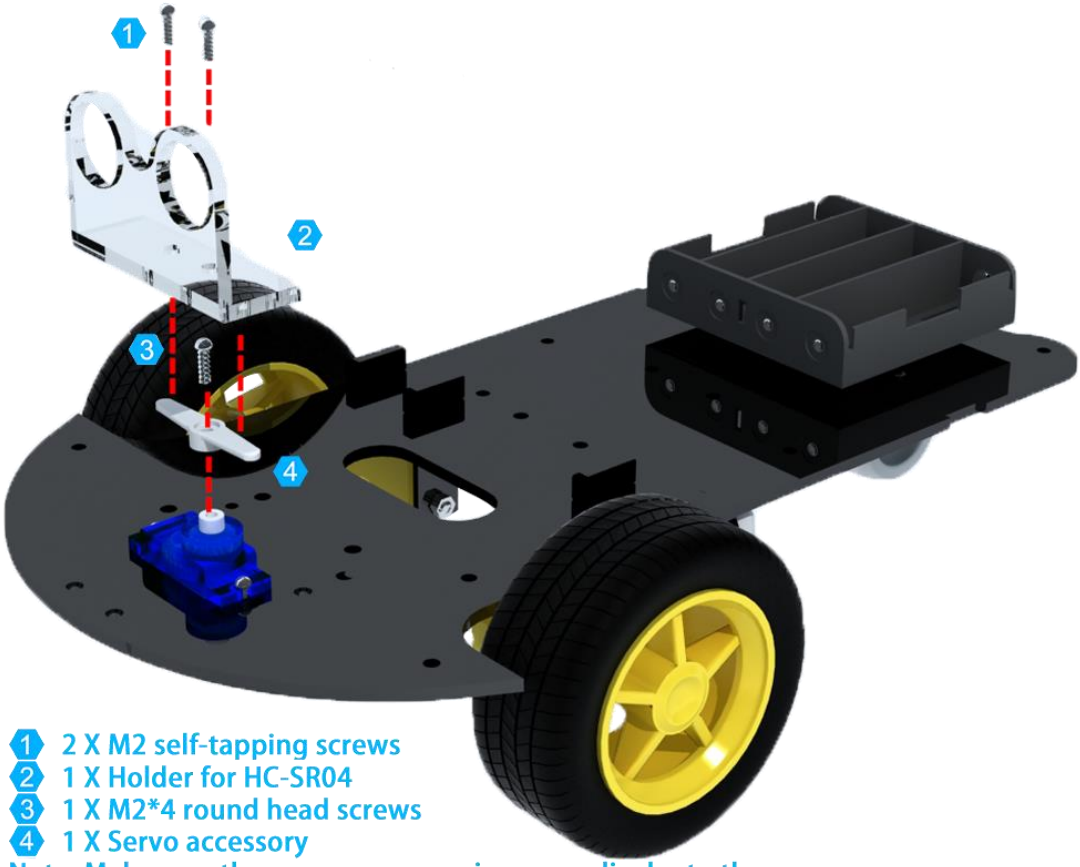

1 2 X M2 self-tapping screws
2 1 X Holder for HC-SR04
3 1 X M2*4 round head screws
4 1 X Servo accessory

Note: Make sure the servo accessory is perpendicular to the forward direction and the maximum right rotation angle and left rotation angle are around the same. Then fix the servo accessory.

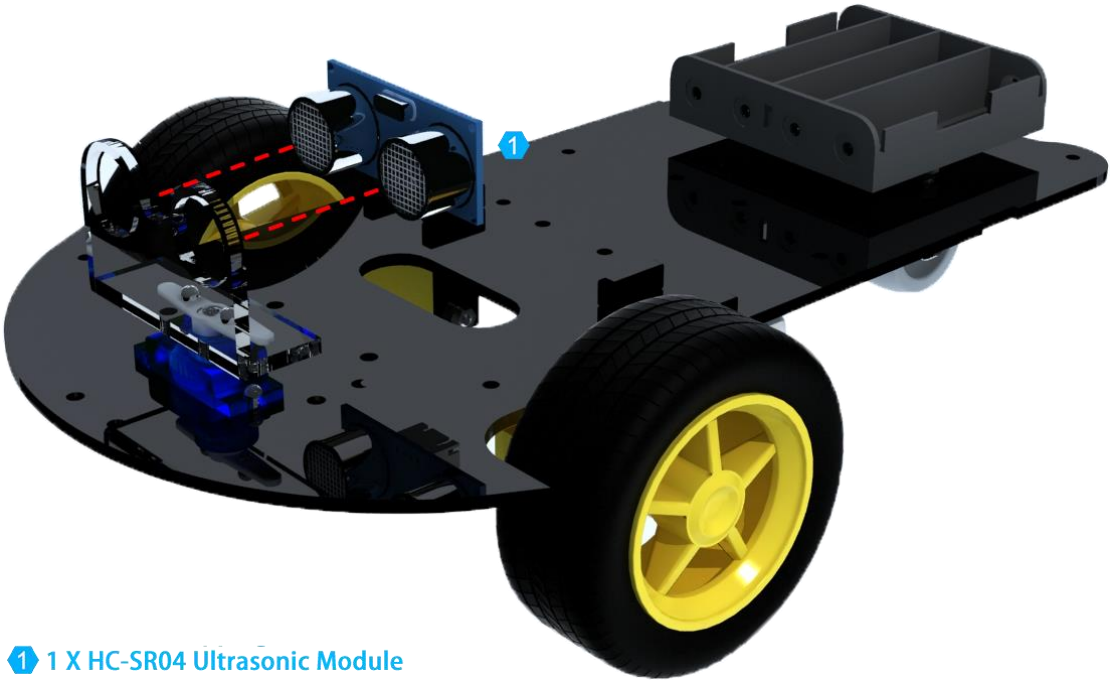

1 1 X HC-SR04 Ultrasonic Module

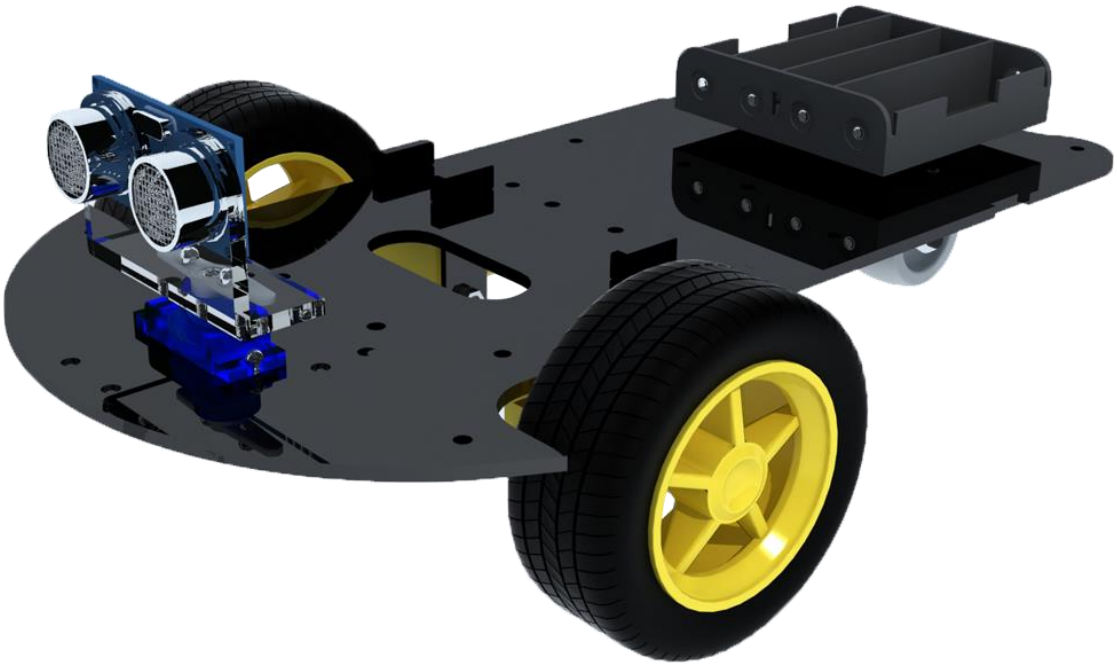

Step 7: Install the UNO R3 board

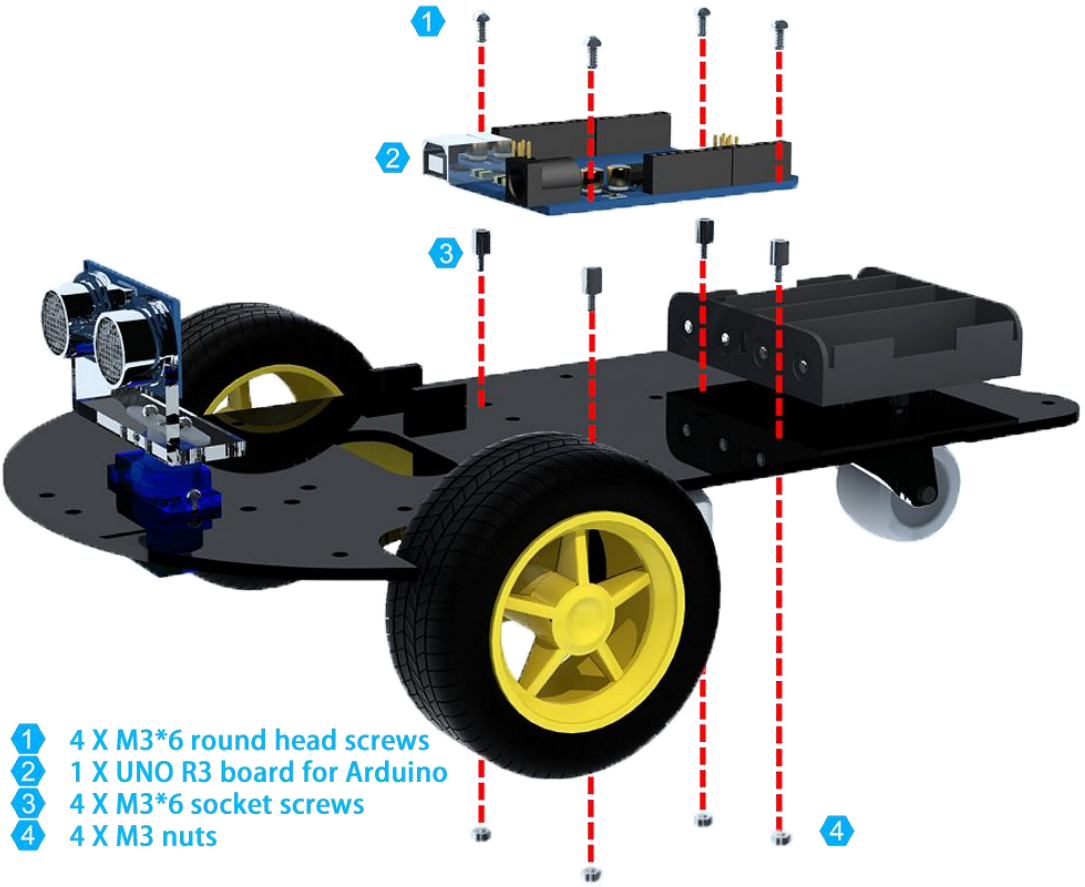

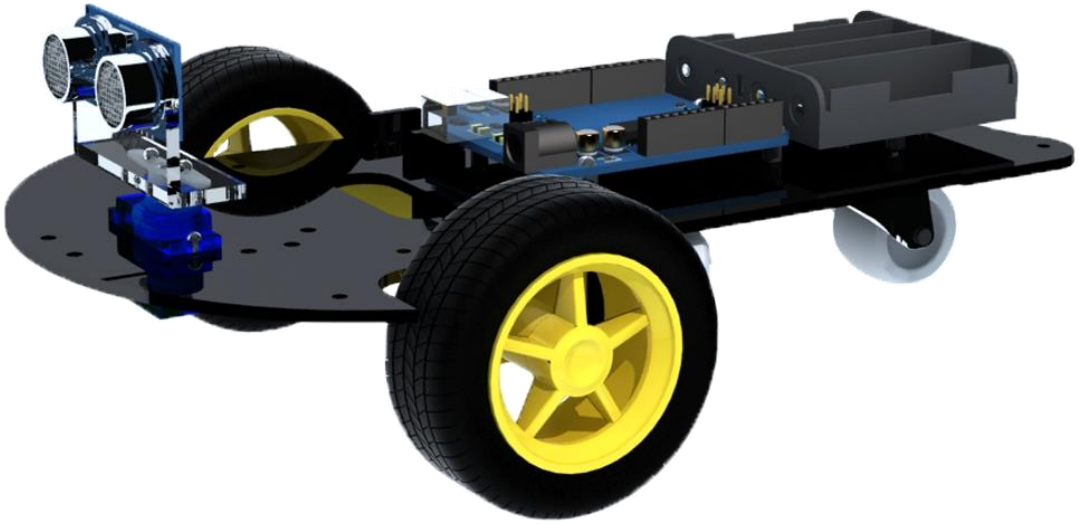

Step 8: Install the L293D motor drive expansion board and the HC-05 Bluetooth module

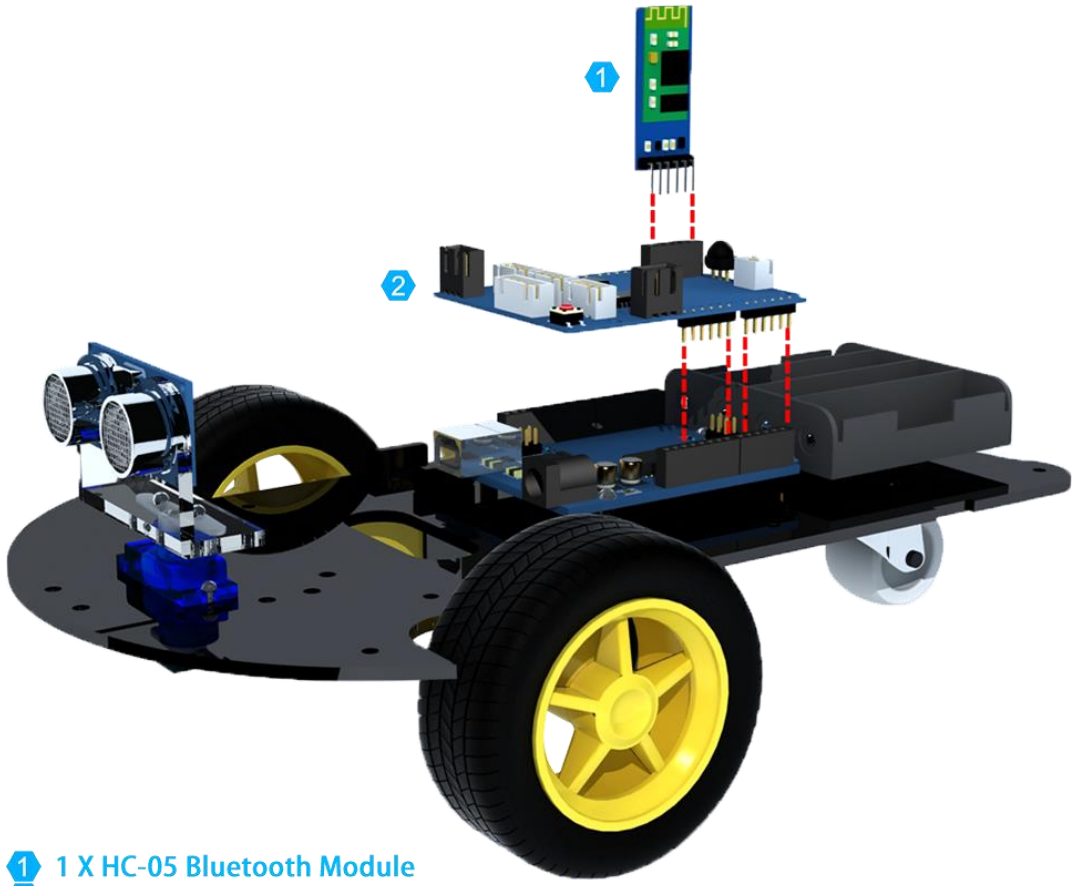

1 X HC-05 Bluetooth Module
2 1 X L293D Motor Drive Expansion Board

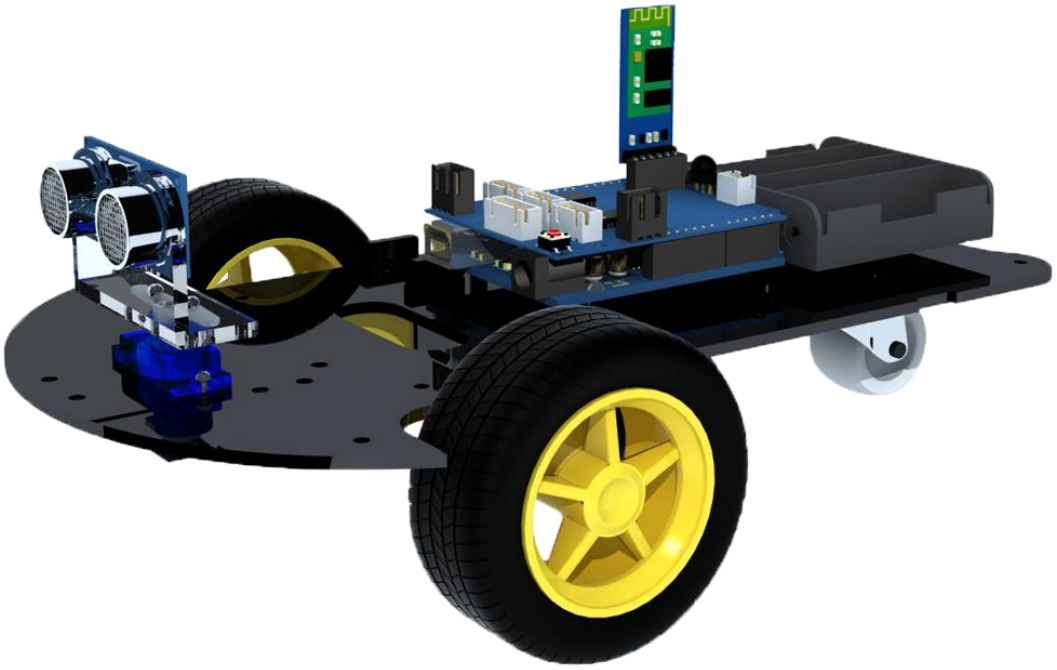

5.2 Wire Connection

- Connect the micro servo motor to the L293D motor drive expansion board

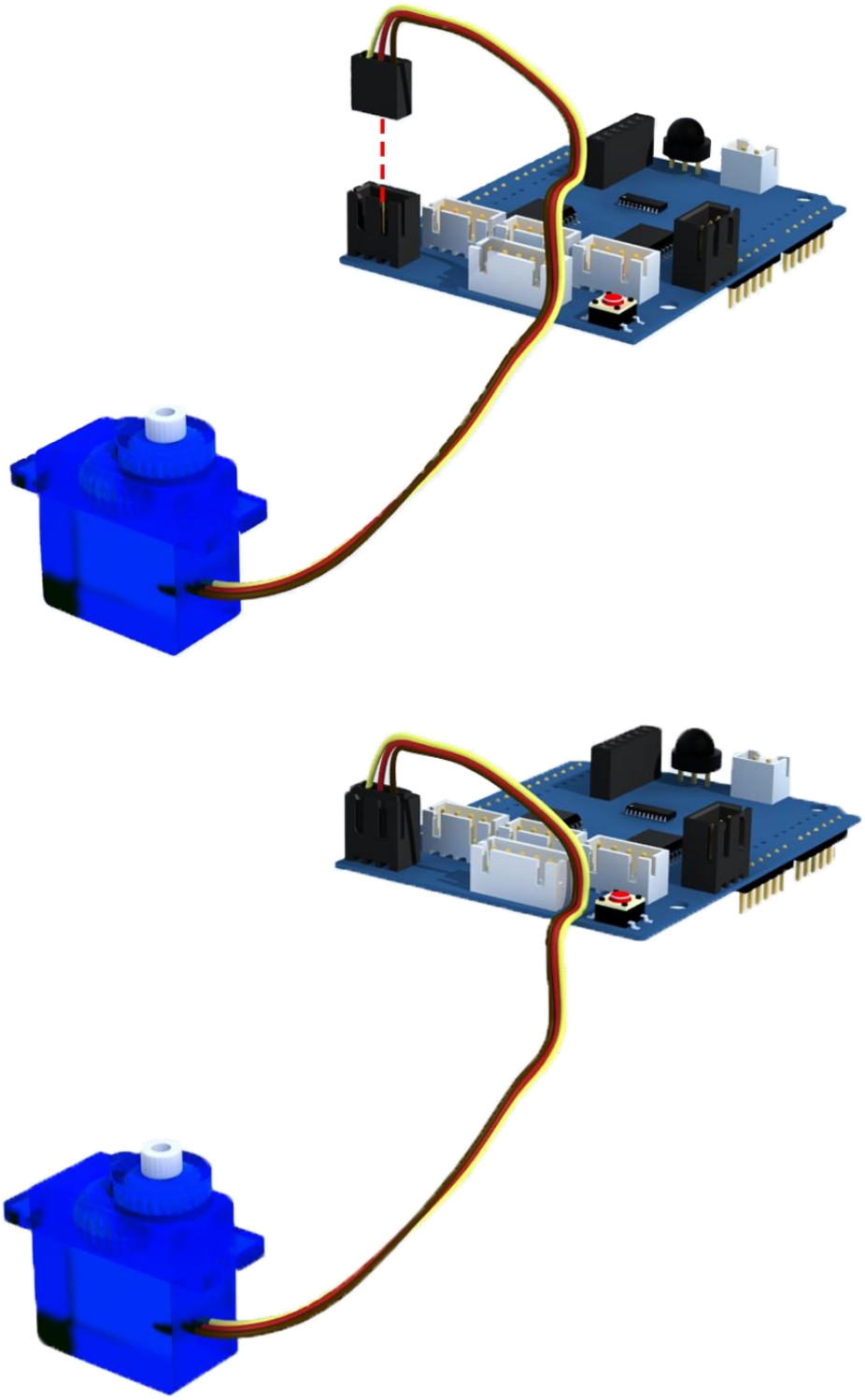

- Connect the battery container to the L293D motor drive expansion board

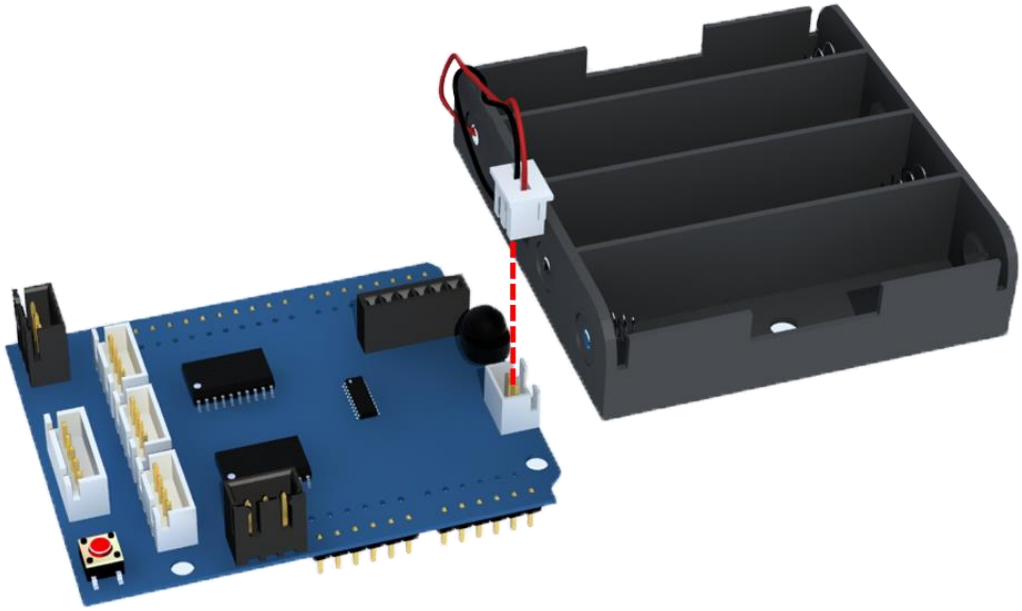

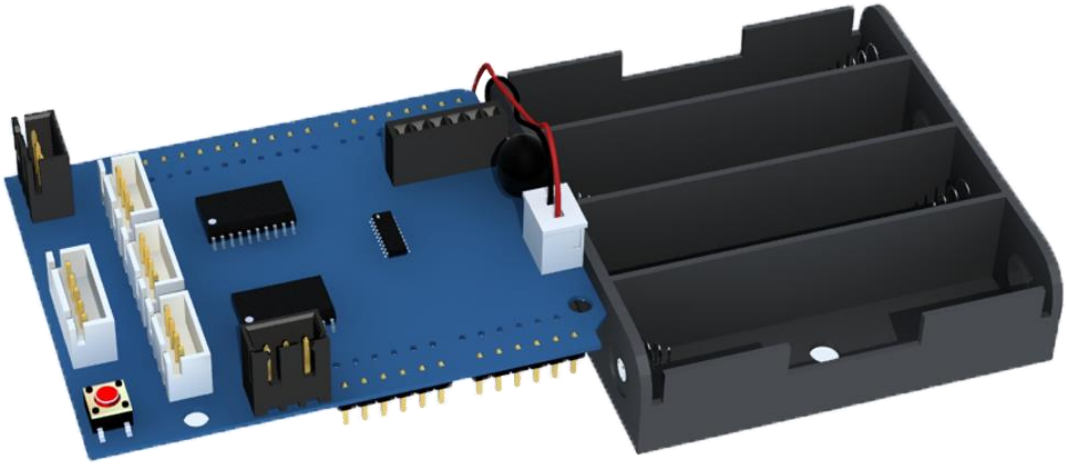

- Connect the ultrasonic sensor module to the L293D motor drive expansion board

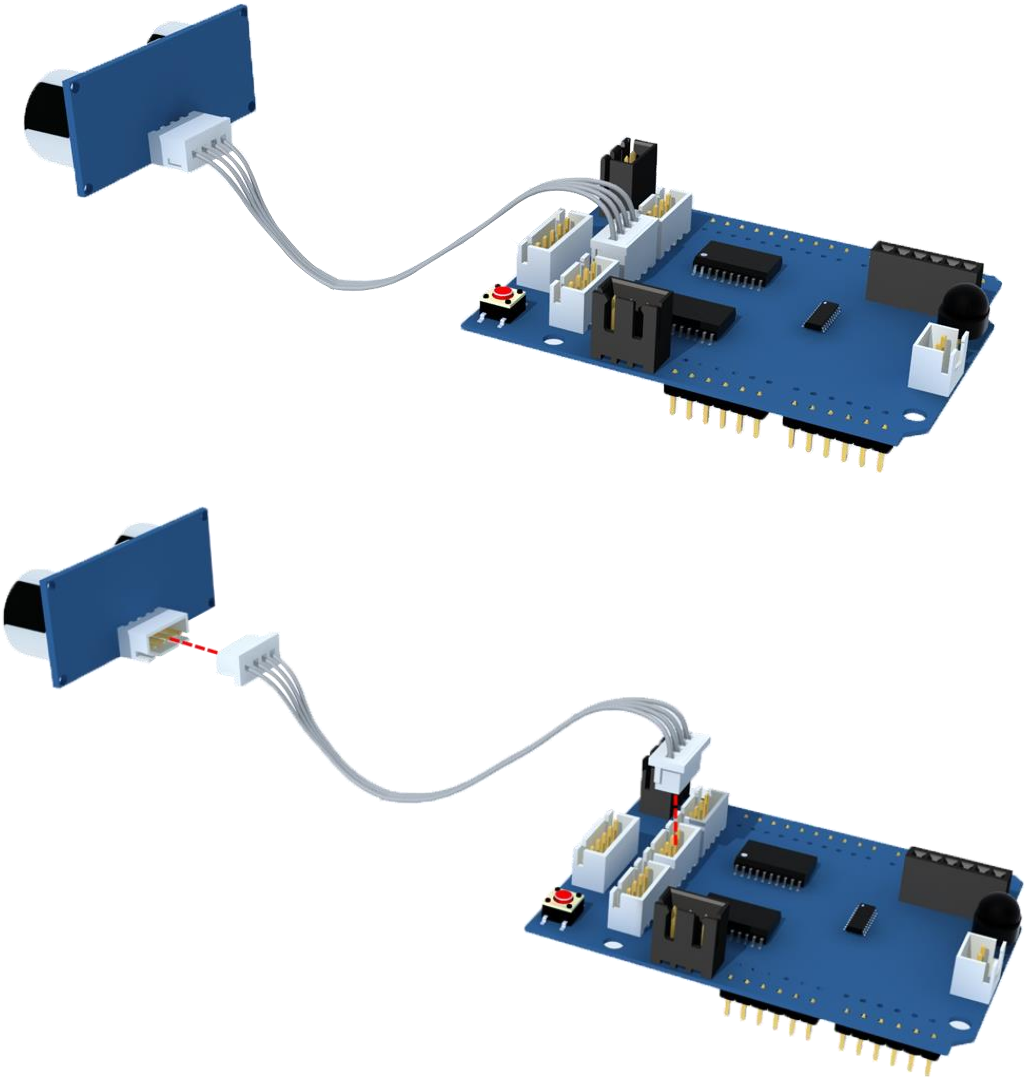

- Connect the deceleration DC motor to the L293D motor drive expansion board

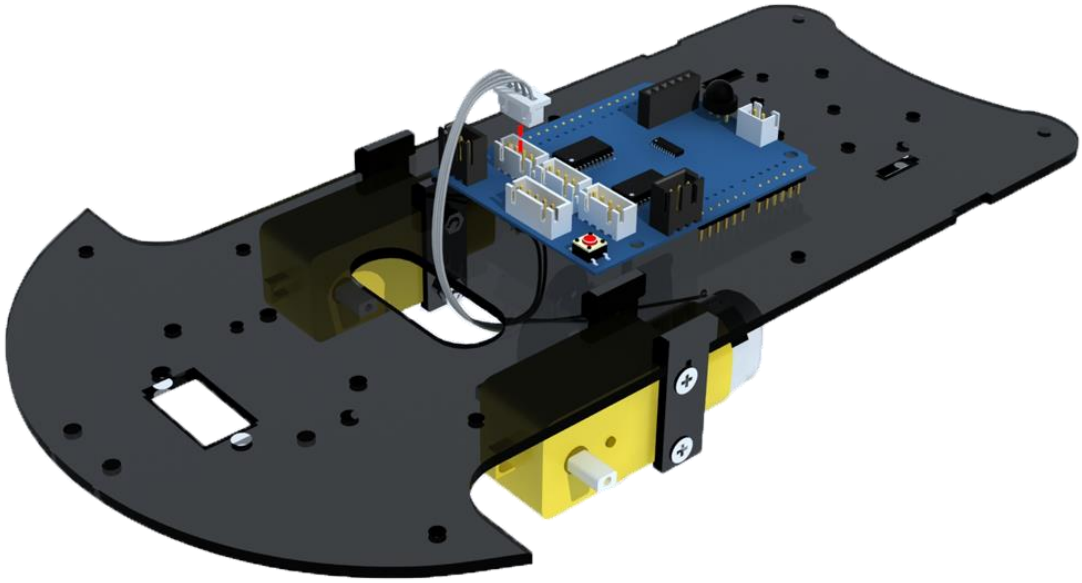

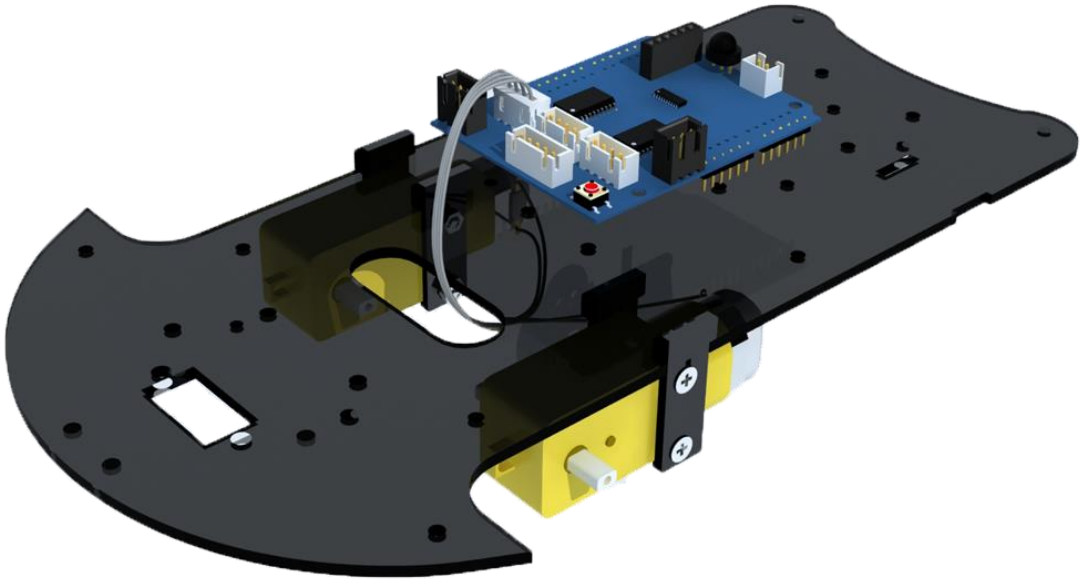

6. Key Value for Remote Controller

7. Start Programing

7.1 Install Arduino IDE

Step 1: Go to the arduino.cc website and click Software. On the page, check the software list on the right side under Download the Arduino Software

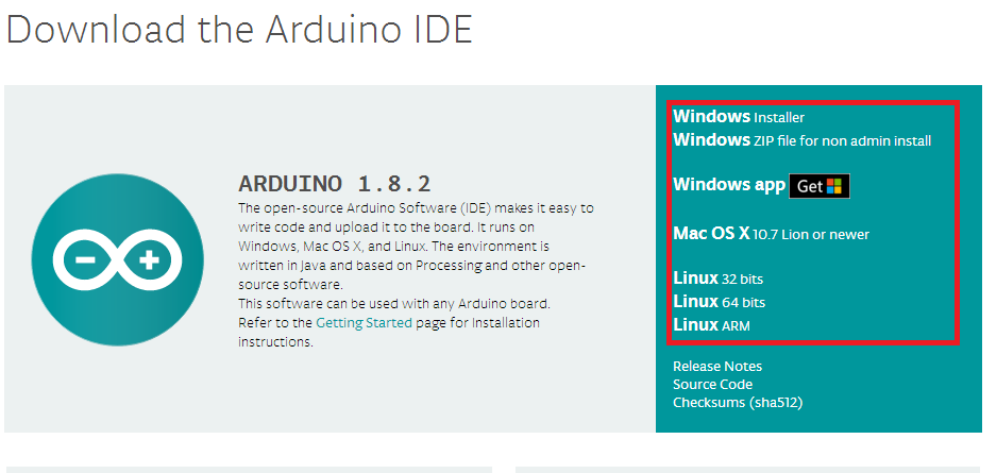

Find the one that suits your operation system and click to download. There are two versions of Arduino for Windows: Installer or ZIP file. You're recommended to download the former

Step 2: Press the button “JUST DOWNLOAD” to download the software

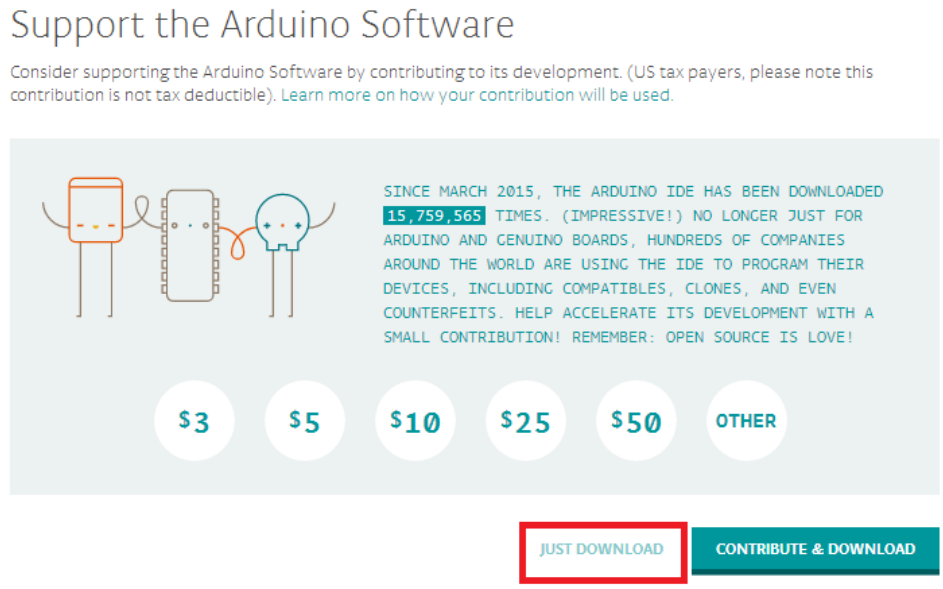

Step 3: Double click the .exe file and the following window will show up. Click "I Agree"

Next

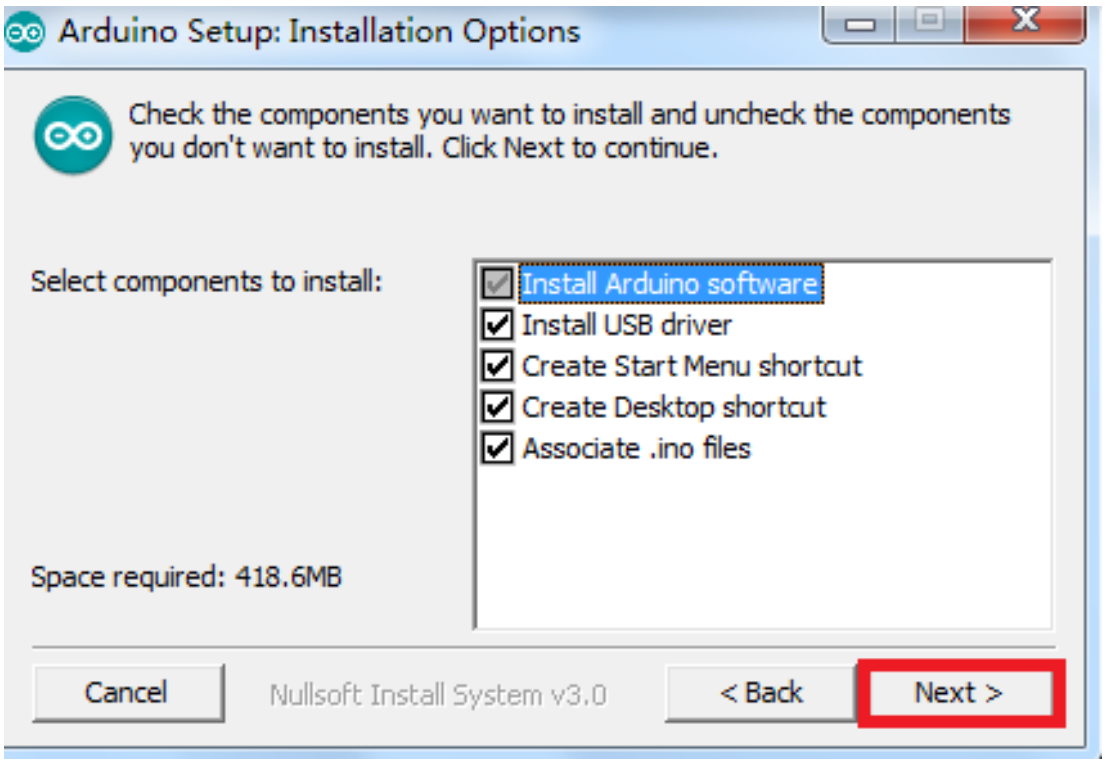

Step 4: Click "Browse" to choose the installation path or enter a directory at the Destination Folder. Click "Install" to initiate installation

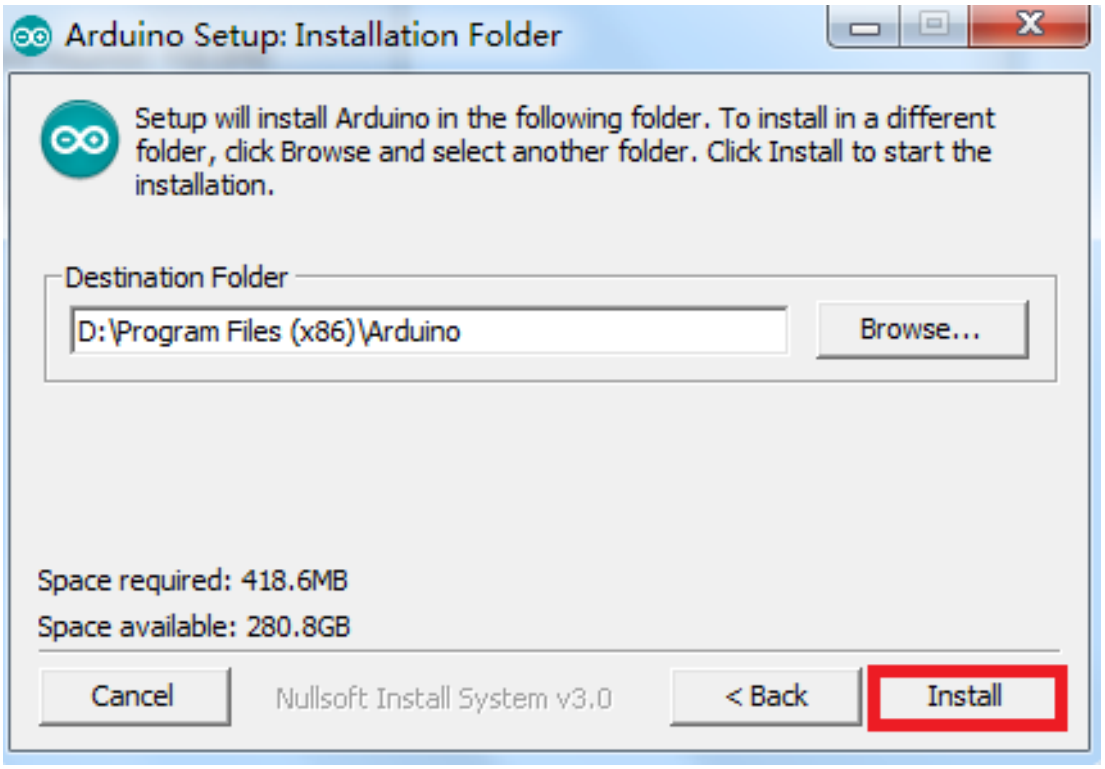

Step 5: After the installing progress bar goes to the end, the "Close button" may be enabled for some PC. Just click it to complete the installation

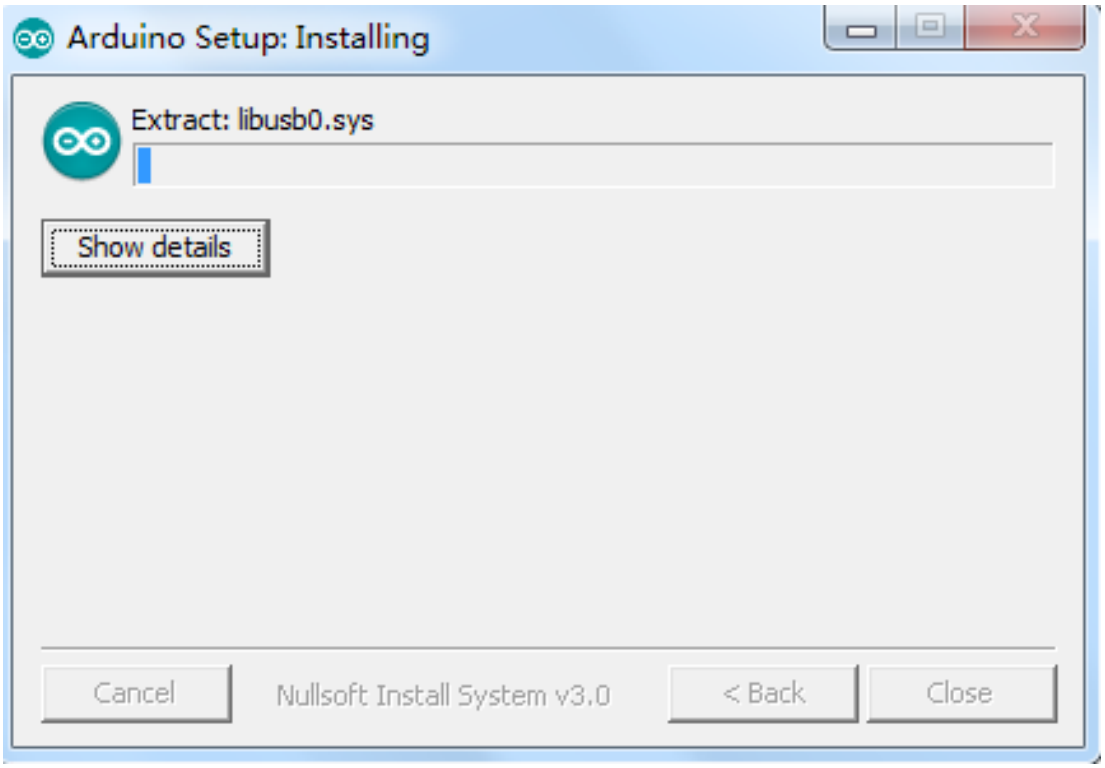

Step 6: Then a prompt appears. Select Always trust software for "Adafruit Industries" and click “Install”

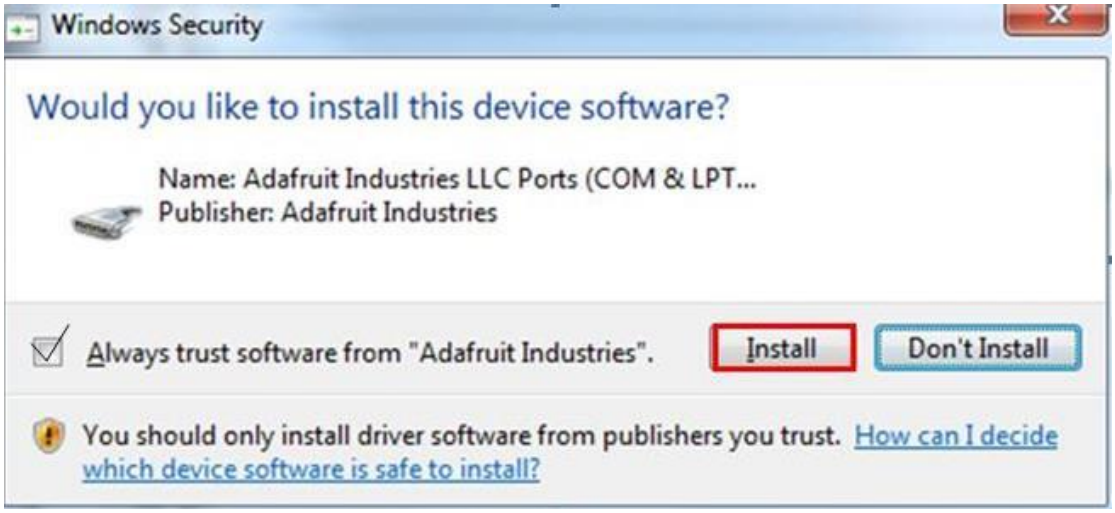

Step 7: After the installation is done, click Close. Then an Arduino icon will appear on the desktop:

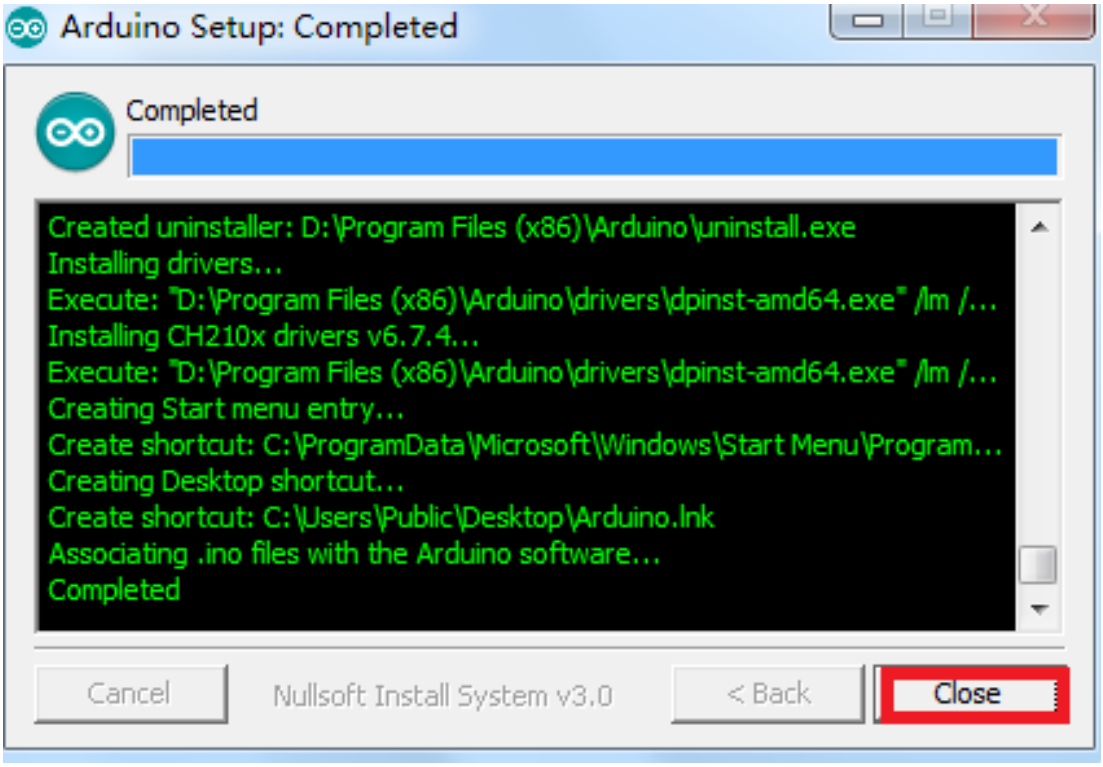

7.2 Add Libraries

Step 1: Download and unzip the file

https://github.com/UCTRONICS/Smart-Robot-Car-Arduino.git

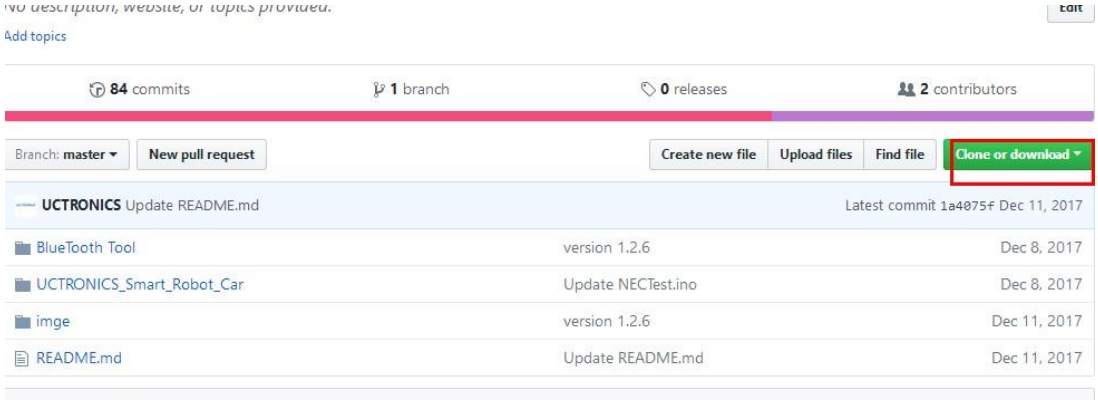

Step 2: Unzip the Smart-Robot-Car-Arduino and copy the UCTRONICS_Smart_Robot_Car library to ..\Arduino\libraries path

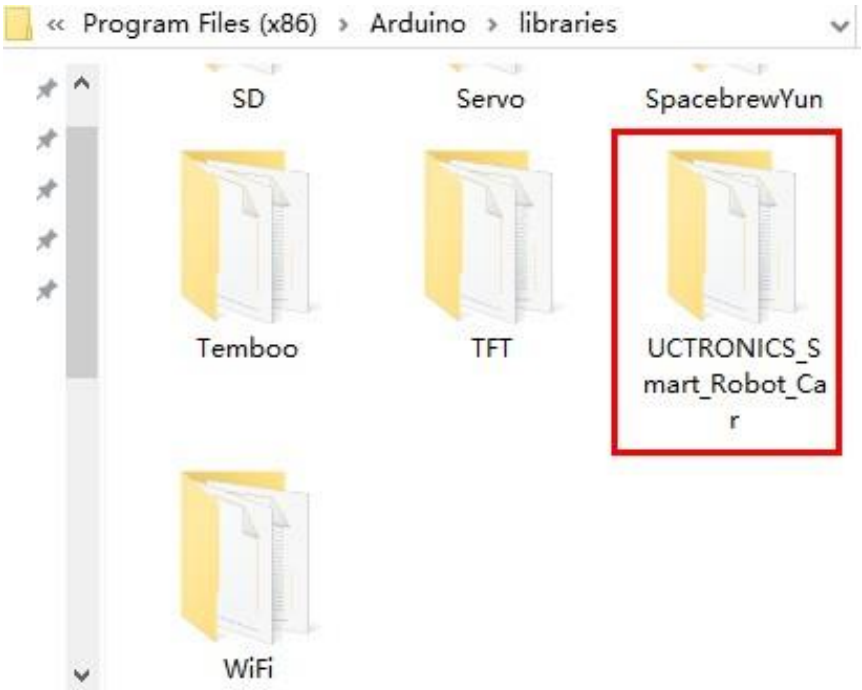

Step 3: Open Arduino IDE, click "Tools" -> " Board: Arduino/Genuino Uno" -> "Arduino/Genuino Uno"

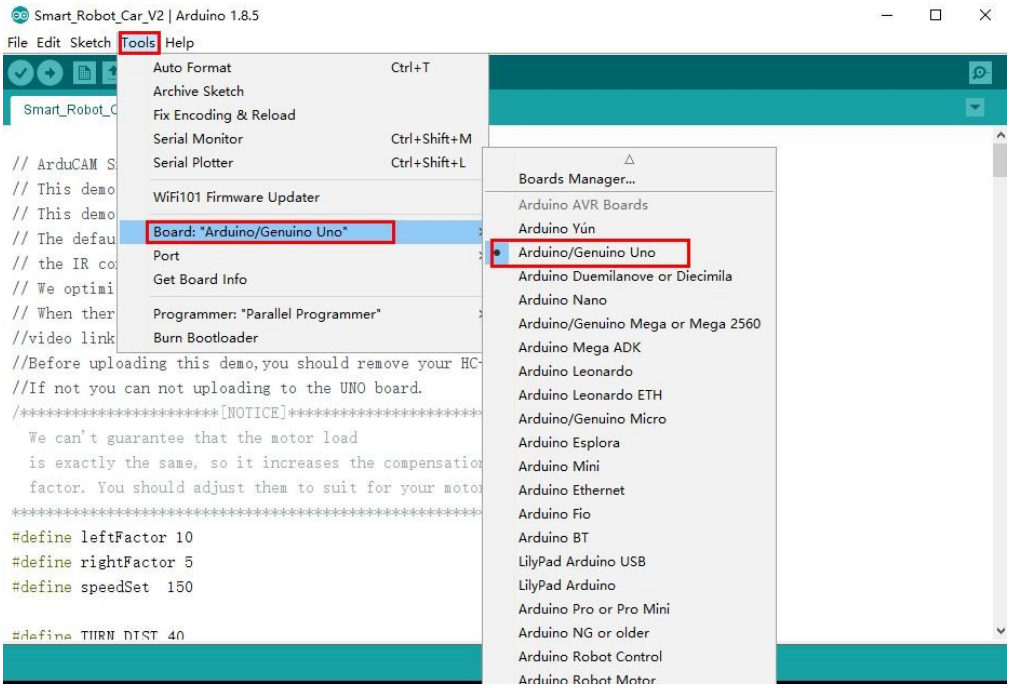

Step 4: Click "Tools" to select the serial port

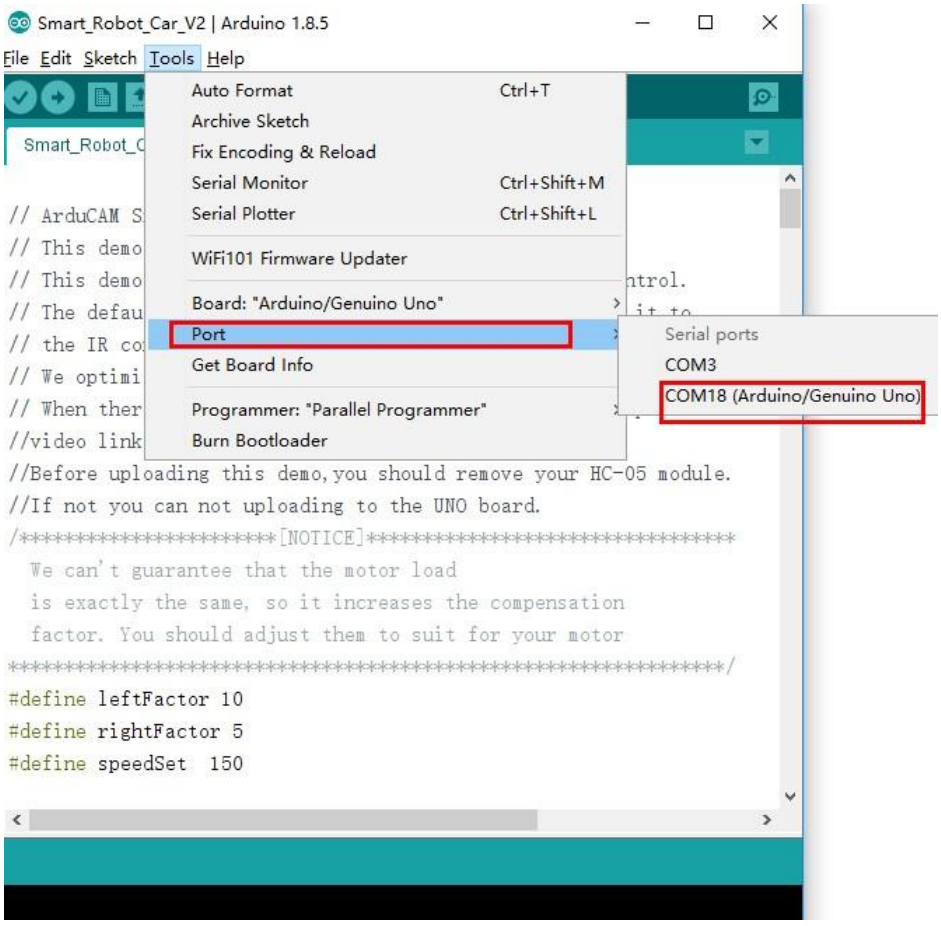

Step 5: Click "File" to select the library

Please note that the UCTRONICS smart robot car V1 supports smart mode, UCTRONICS smart robot car V2 supports Bluetooth control and IR control. So you should choose V2.

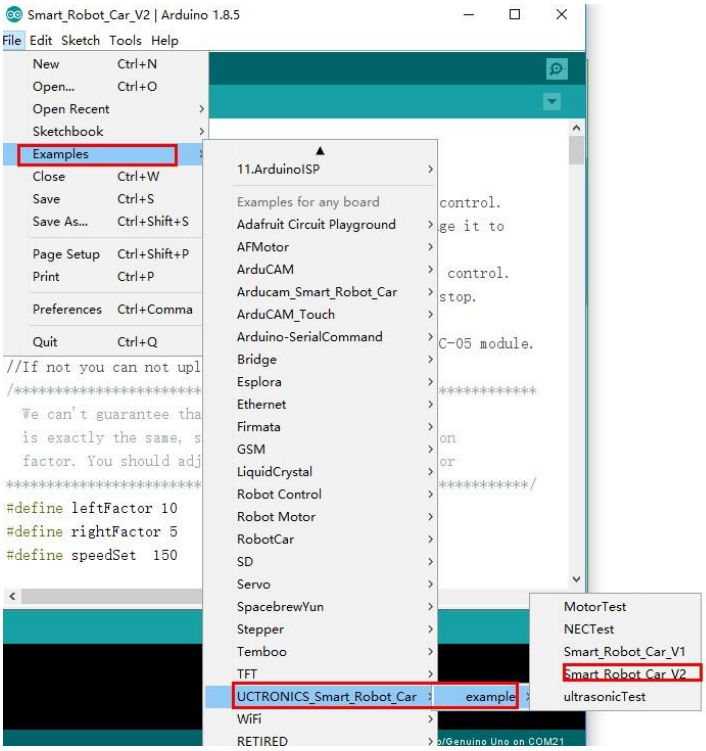

Step 6: Compile and upload

Please note that before compiling, you should remove the HC-05 Bluetooth module

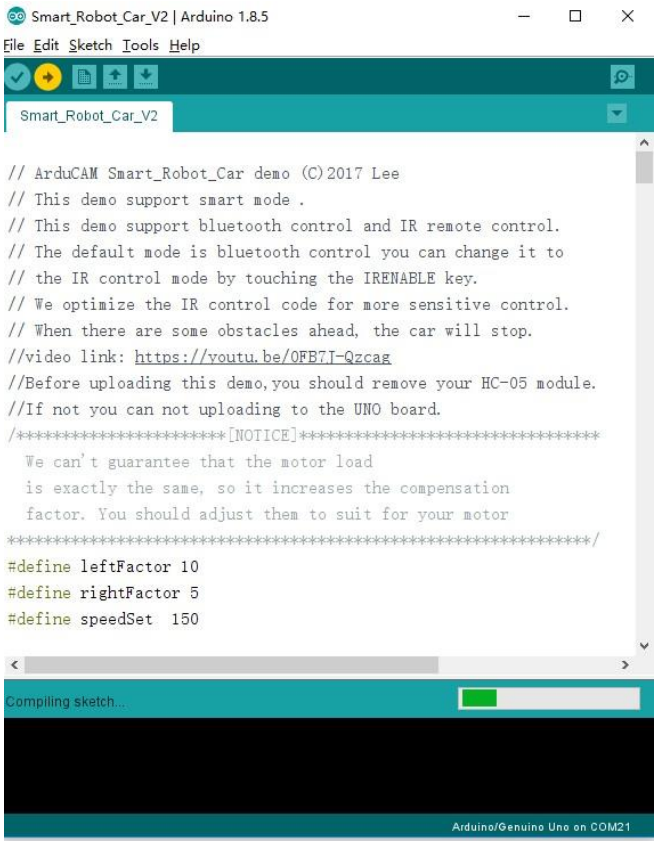

8. Bluetooth App for Android

Step 1: Download and Install App

https://github.com/UCTRONICS/Smart-Robot-Car-Arduino/tree/master/BlueTooth%20Tool

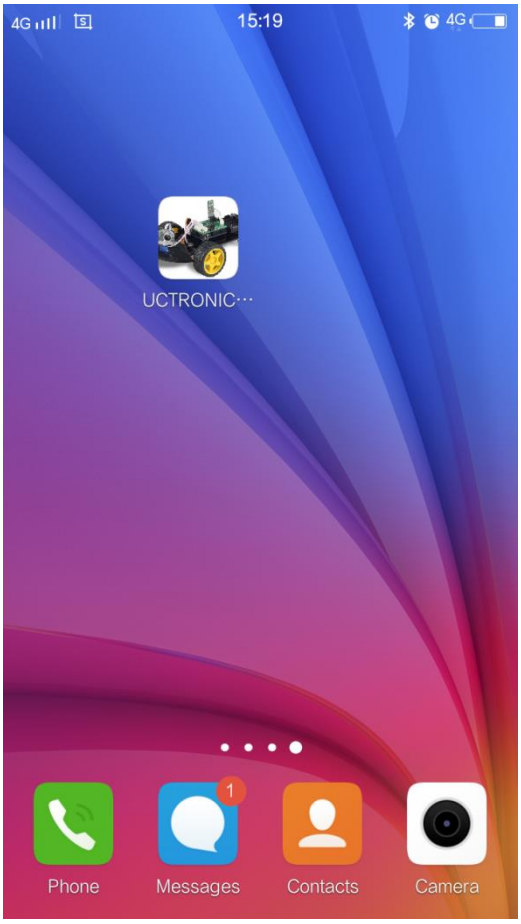

Step 2: Open UCTRONICS_Car_Controller software, the default is Bluetooth Mode

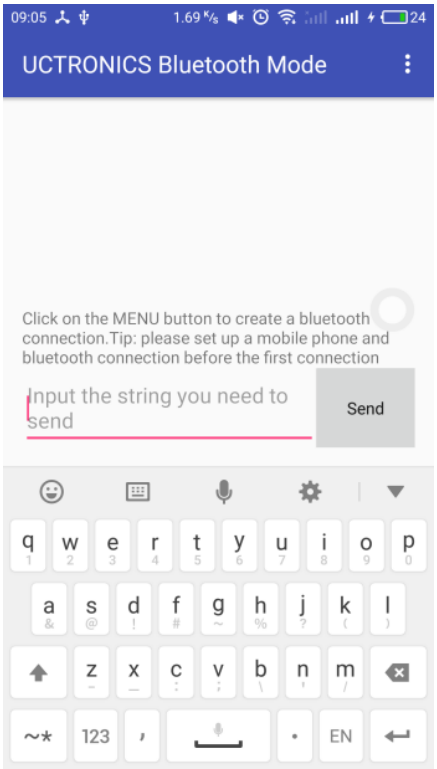

Step 3: Click the top right and choose 'Connected device'

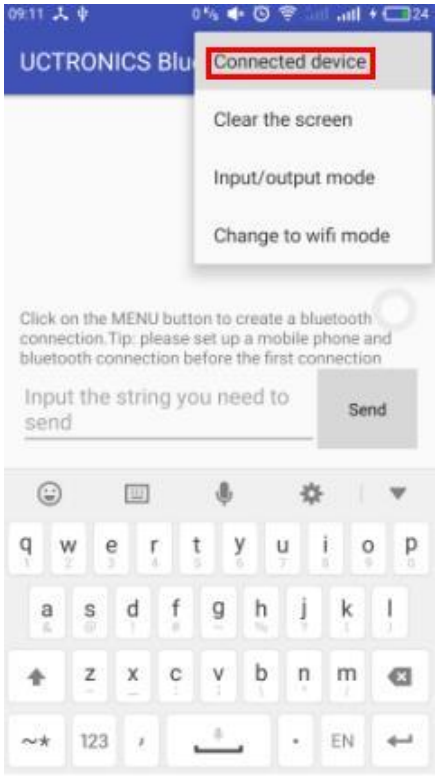

Step 4: Select ‘CAR CONTROL MODE’

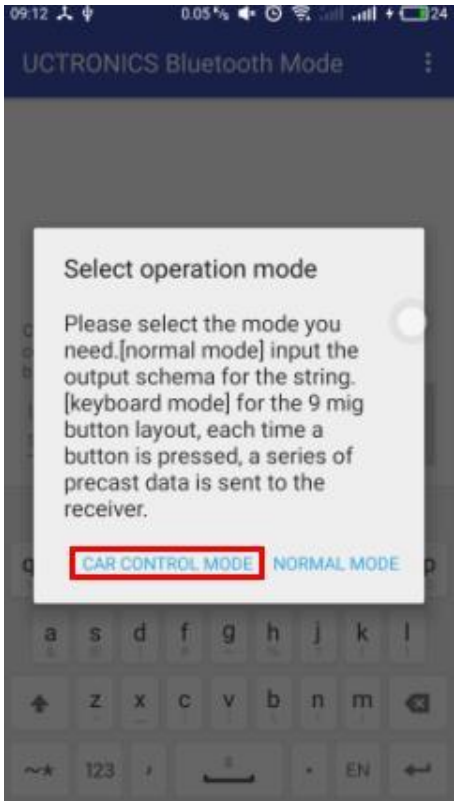

Step 5: Search Bluetooth Device

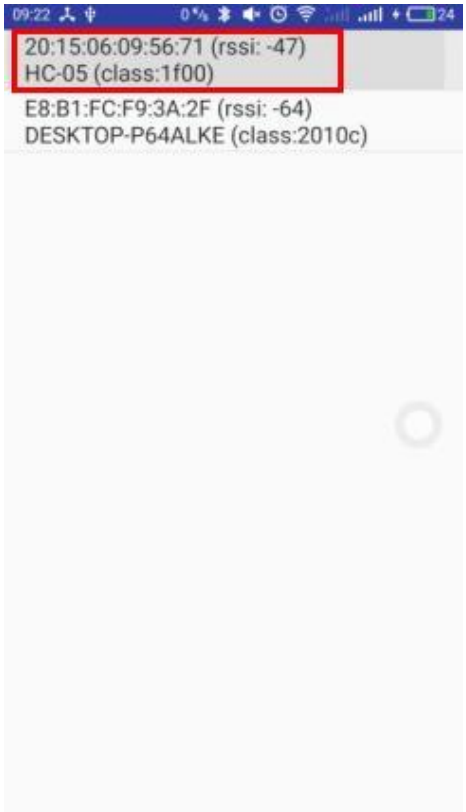

Step 6: Enter control menu

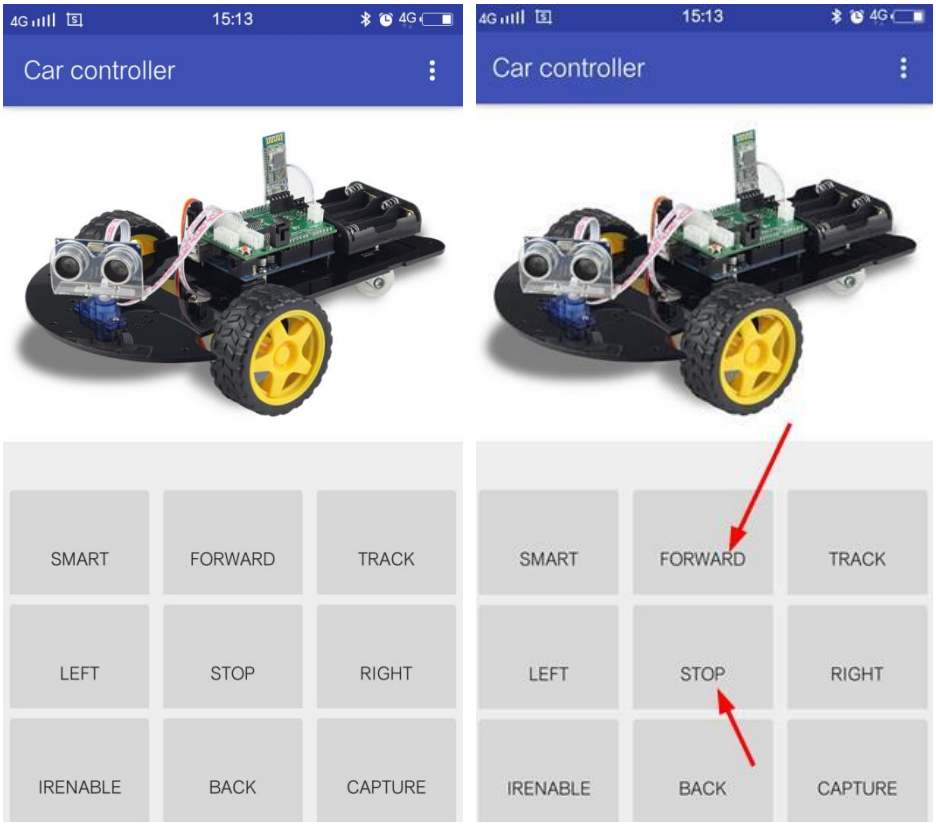

For examples and documentation, please visit:

https://github.com/UCTRONICS/Smart-Robot-Car-Arduino.git

If any problems or suggestions for the tutorial or the robot car please feel free to contact us by following ways:

Website: www.uctronics.com

Email: support@uctronics.com

Tel: +86 025 84271192

Skype: fpga4u