Duender
V-wheels AB & X axis

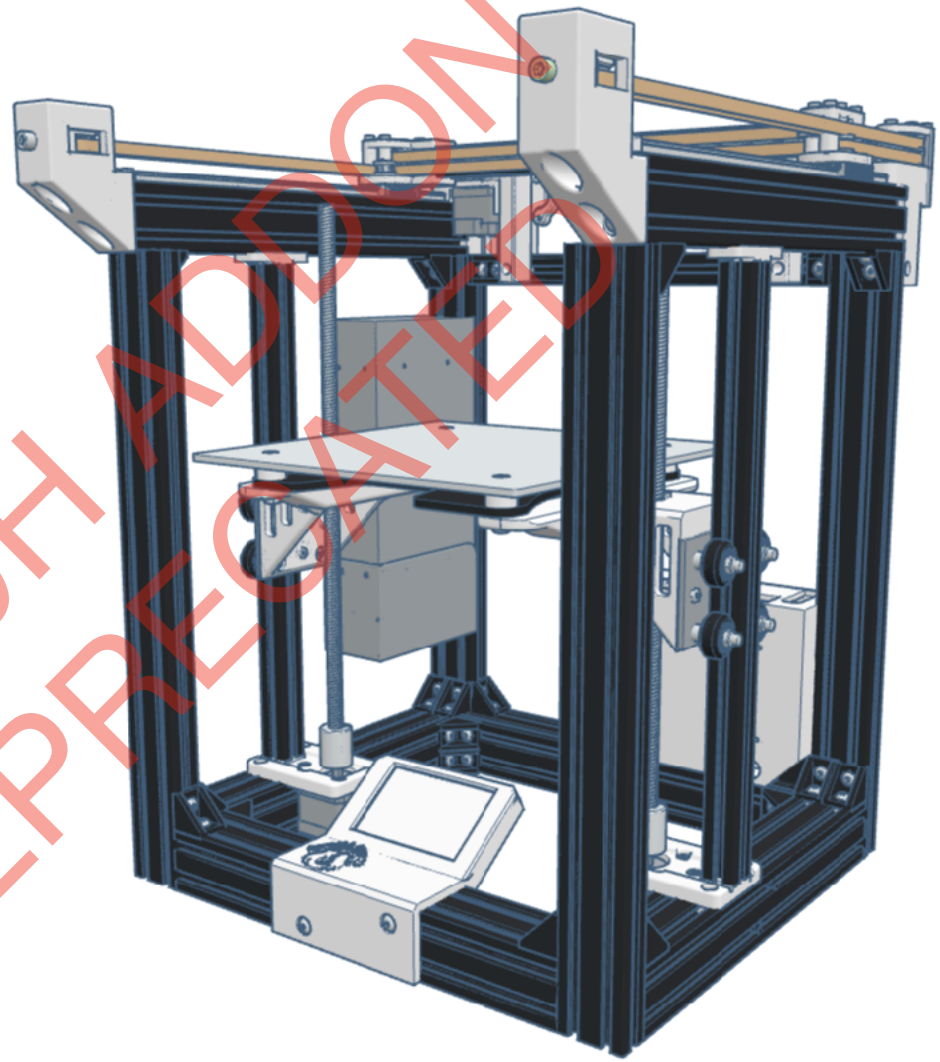

MGN9H ADDON
DEPRECATED

Your Open-Source 2 x Creality Ender-3 core XY conversion

by Sergei Irbis

Building the AB kinematics

AB Gantry

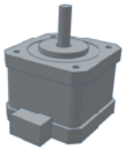	Nema 17 42-40 (from Ender 3)	2
	M3x30 SHCS	12
	M3x20 SHCS	2
	M3x16 SHCS	2
	M3x8 SHCS	4
	M3x0,5 spacer	28
	M3x10 spacer	1
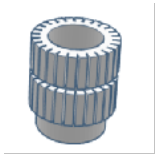	M3 Heat set insert	18
	GT216T6W3B toothless idler	8
	GT216T6W5B motor pulley	2
	M5 Nylstop nut (from Ender 3)	8
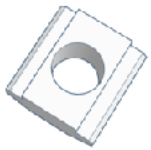	M5 T-slot nut	2
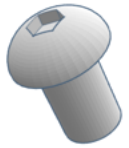	M5x8 BHCS screw	14
	M5x30 BHCS screw (from Ender 3)	6
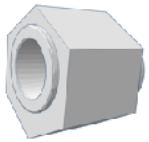	Eccentric M5 nut (from Ender 3)	2
	Wheel M5 spacer (from Ender 3)	4
	POM V-Wheel (from Ender 3)	6

Building the AB kinematics

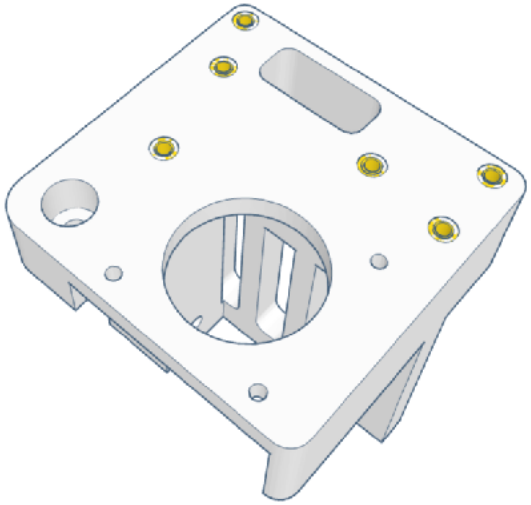

Prepare the bottom part of AB motor holders:
with 6 M3 heat set inserts each side
(12 M3 heat set inserts total).

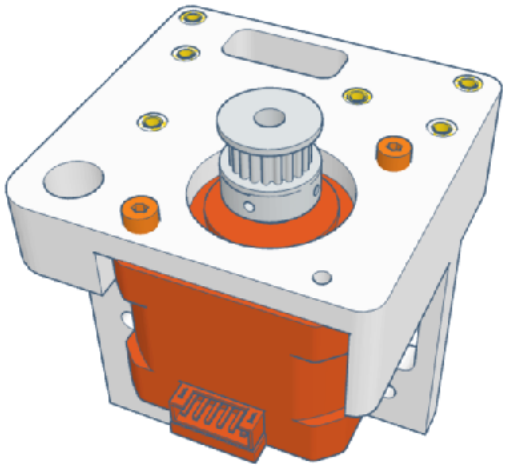

Install the motors under the plates with 2 M3x8 SHCS screws in the shown locations
Mind the motor plug orientation

Also place the motor pulleys onto the shafts of A & B motors
Do not tighten them too much. They will need to be adjusted later, after belts installation

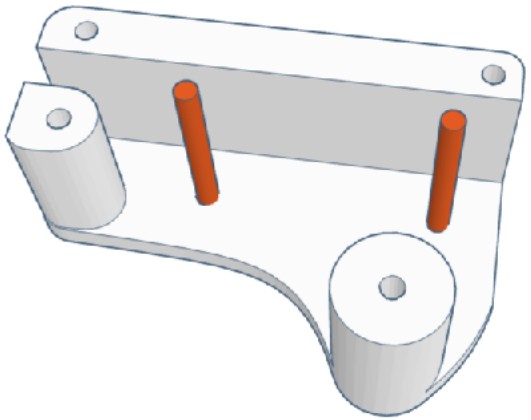

Pass 2 M3x30 SHCS into the idler holes and turn both top half upside down.

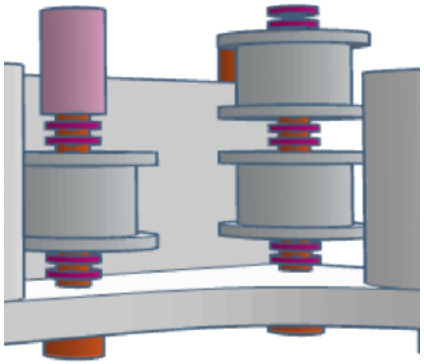

For the Left AB mount:

Stack 2 M3x0,5mm spacers, one GT2 16mm toothless idler, 2 M3x0,5mm spacers, the second idler, and 2 M3x0,5mm spacers onto the outer most pin (right side when upside down)
Stack 2 M3x0,5mm spacers, one GT2 16mm toothless idler, 2 more M3x0,5mm shims and a M3x10mm spacer on the inner-most pin.

The best option is certainly to buy and install a metal M3x10 spacer, but should you not have one on hand, you may use the printed one provided in the stl files.

Building the AB kinematics

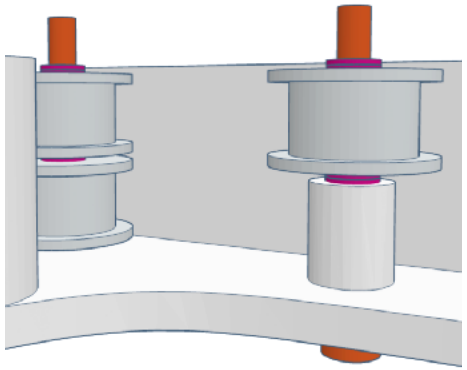

For the Right AB mount:

Stack 2 M3x0,5mm spacers, one GT2 16mm toothless idler, 2 M3x0,5mm spacers, the second idler, and 2 M3x0,5mm spacers onto the outer most pin (left side when upside down).

Stack 3 M3x0,5mm spacers, one GT2 16mm toothless idler and 2 more M3x0,5mm spacers on the inner-most pin, onto the printed post

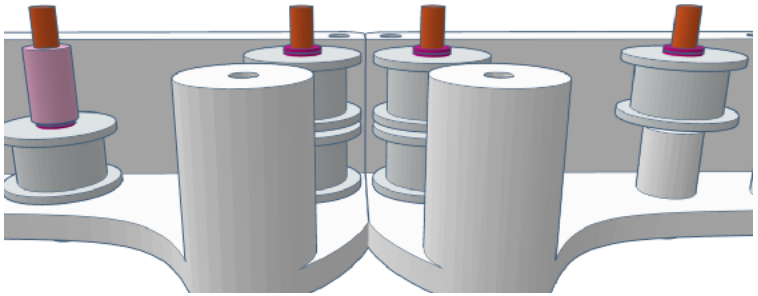

When the mounts are one against another, the idlers should be perfectly level between both sides. If that is not the case, adjust the shims count as necessary

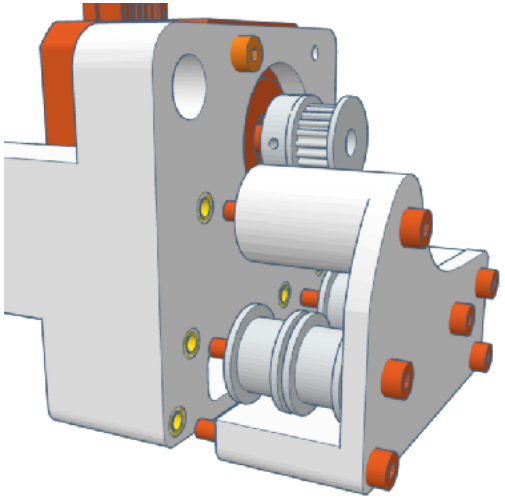

Put the parts on their back so shims don't fall and assemble the two halves together.
Attach them adding 4 M3x30 SHCS on each side.
(12 M3x30 SHCS total)

Building the AB kinematics

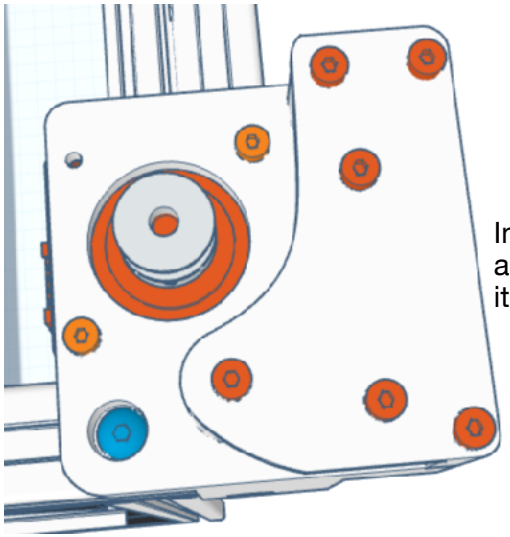

Install the AB motor holders each side and use a M5x8 BHCS screw to secure it onto the top M5 T-slot nut

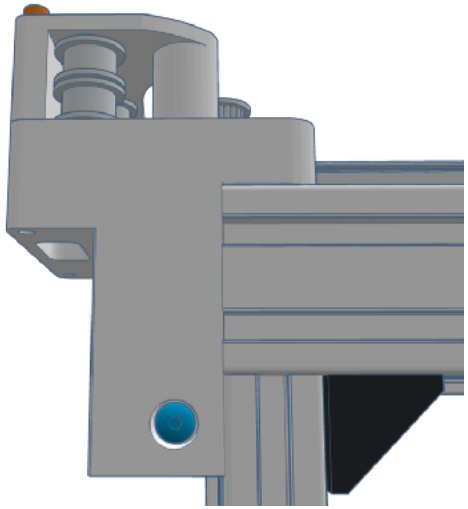

Use a second M5x8 BHCS screw to hold into the tapped end of the 2020-E back brace

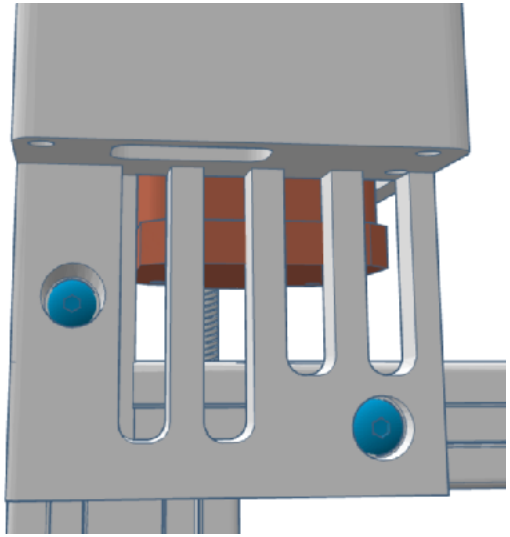

Use a M5x8 BHCS screw to hold into the tapped end of the 2040-C Y axis and another one to hold onto the back brace M5 T-slot nut

Building the AB kinematics

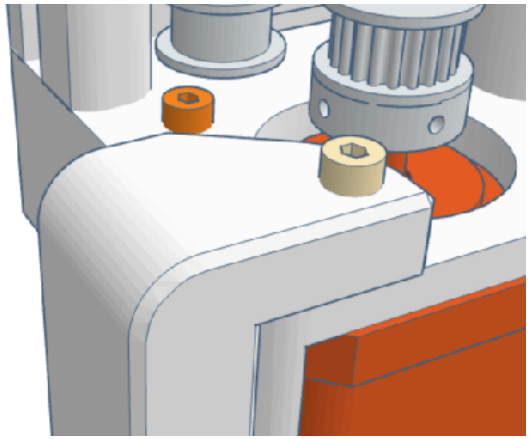

Install the motor holders with M3x16 SHCS that screws right into the motor

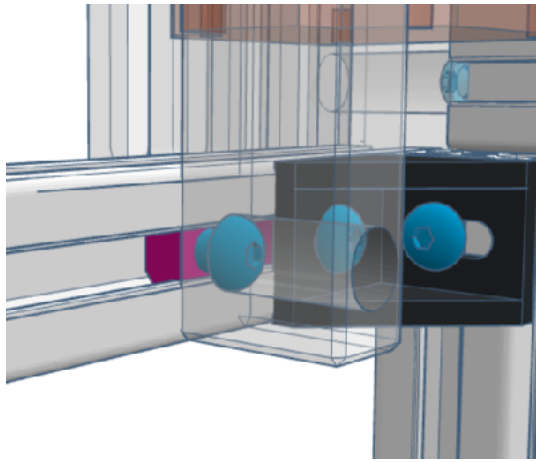

Secure the base of the holder with an M5x8 BHCS screw into one of the previously inserted T-slot nuts in front of the back brace

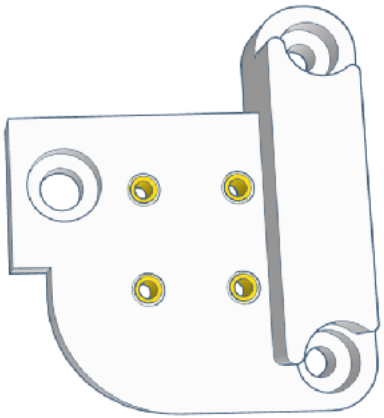

Prepare both carriage plates by inserting 4 M3 heat sets each side
(8 M3 heat inserts total).

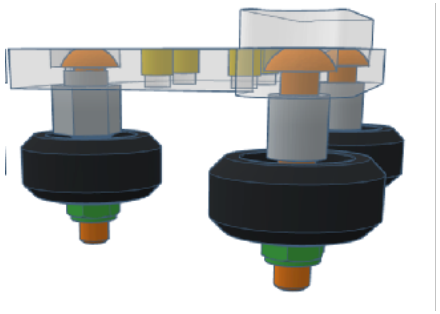

Just like the Z plates, insert 3 M5x30 BHCS into each carriage, then on the outer side, 2 M5 spacers, the V-wheels, and M5 hex nuts to secure each stack.
In the inner side, stack the eccentric nut, 1 V-wheel and a M5 hex nut to tighten the whole.
Leave them loose for now.

(6 M5x30 BHCS, 4 M5 spacers, 2 eccentric columns, 6 V-wheels and 6 M5 hex nuts total)

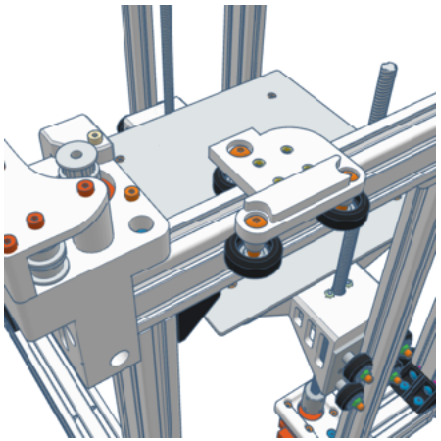

Place the carriages on both Y axis rails and tighten the M5 hex nuts, then proceed to adjusting the eccentric nut to adjust the pressure of the wheels.

Building the AB kinematics

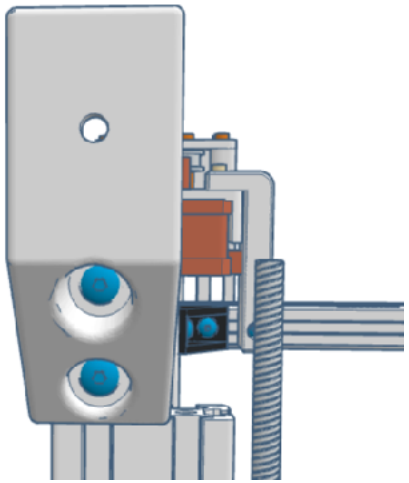

Install the front holders with 2 M5x8 BHCS screws each side

MIND THE SIDE, the holders are not symmetrical

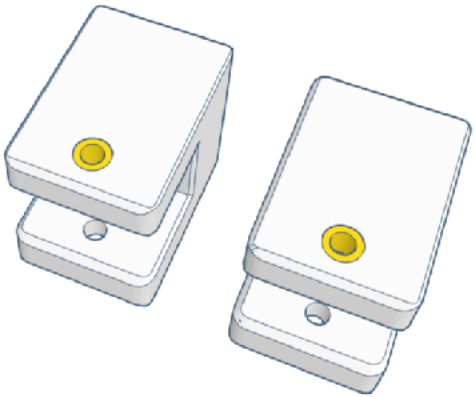

Prepare both the Left and Right belt tensioners by placing an M3 heat set insert in the underside hole

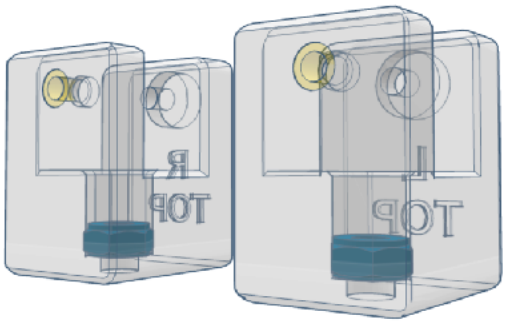

Insert an M5 Nylstop nut into the groove inside both holders. A light dab of glue may be used to ensure they stay in

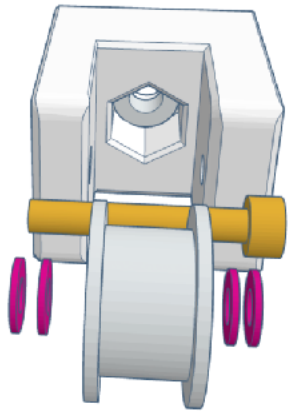

Place 2 M3x0,5mm shims, a 16mm toothless idler and 2 M3x0,5mm shims, all held by a M3x20 SHCS screw inside each tensioner

As already mentioned, a printed jig can make this much easier

Building the X axis

X axis gantry

	M3x30 SHCS	10
	M3x6 SHCS	8
	M3x0,5 spacer	20
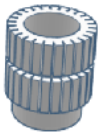	M3 Heat set insert	10
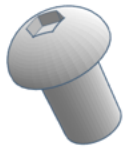	M5x8 BHCS screw	6
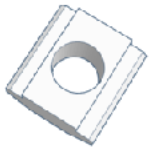	M5 T-slot nut	6
	GT216T6W3B toothless idler	2
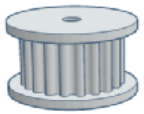	GT216T6W3B toothed idler	2
	Modified toolhead plate (from Ender 3)	1
	M5x30 BHCS screw (from Ender 3)	3
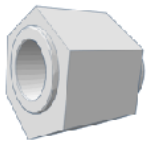	Eccentric M5 nut (from Ender 3)	1
	Wheel M5 spacer (from Ender 3)	2
	POM V-Wheel (from Ender 3)	3
	M5 Nylstop nut (from Ender 3)	3

Building the X axis

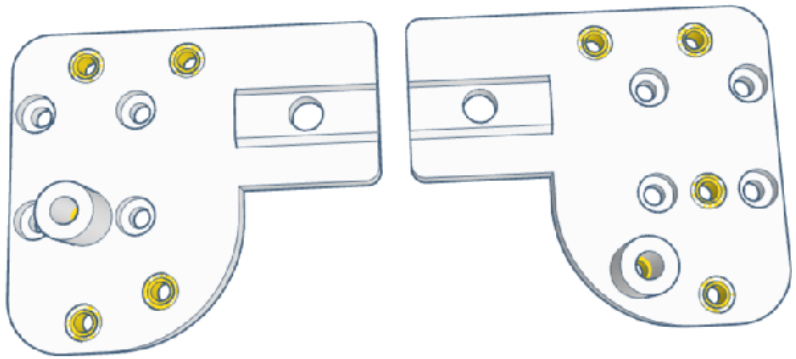

Prepare both bottom parts of the X carriage with 5 M3 heat set inserts each side.
Those in the printed posts are better inserted from below.

Place each bottom half onto its carriage, and secure it with 4 M3x6 SHCS
(8 M3x6 SHCS total).

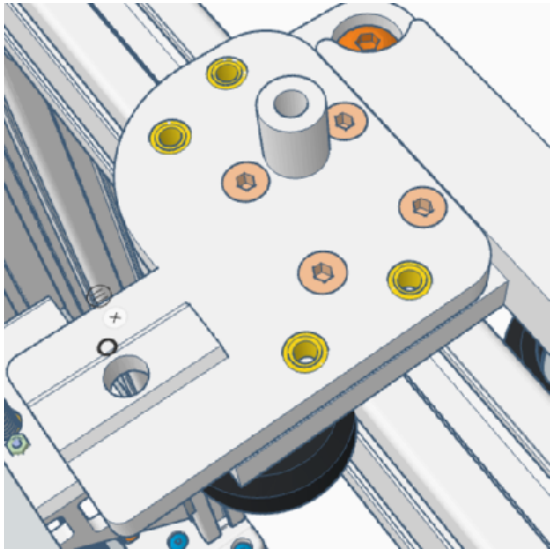

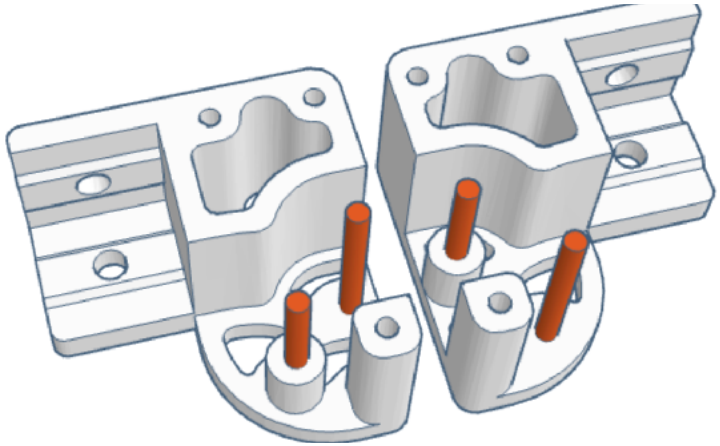

Turn both top halves upside down, and insert 2 M3x30 SHCS each side to serve as the idler axis

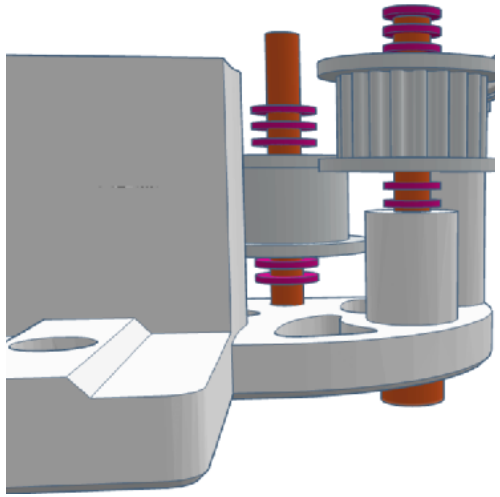

Each half takes:
2 M3x0,5mm shims, a **toothed** idler and 3 M3x0,5mm shims on the front axis,

2 M3x0,5mm shims, a **toothless** idler and 3 M3x0,5mm shims on the rear one.

Building the X axis

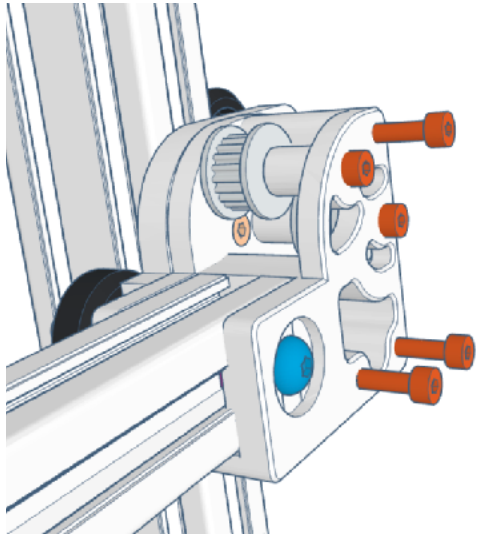

Put the printer on its back so the shims don't fall and tighten both axis, adding 3 M3x30 SHCS, to assemble the two halves.
(6 M3x30 SHCS total)

Just screw enough so that parts hold together: both halves need to be lose for next step.

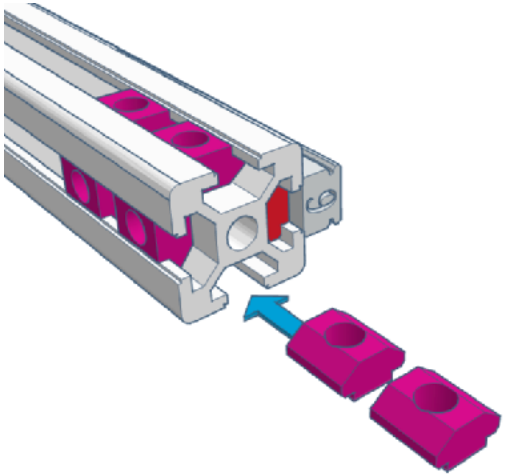

Insert 2 M5 T-slot nuts on the top side, 2 on the back side and 2 more under the X axis extrusion
(6 M5 T-slot nuts total)

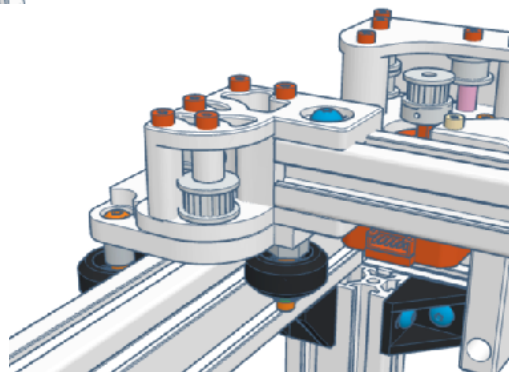

Push the X axis into its carriages on the two sides of the printer, carefully centre it then tighten both carriages.

Once done, use the previously inserted T-nuts to tighten 3 M5x8 BHCS at each end:
1 on top, 1 on the back and 1 under the X axis.
(6 M5x8 BHCS total)

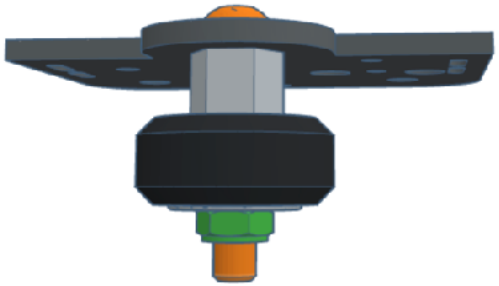

Place a M5x30 BHCS into the bottom of the toolhead plate, from below stack the eccentric nut, 1 V-wheel and tighten a M5 hex nut onto it.
Leave the nut loose for now.

Building the X axis

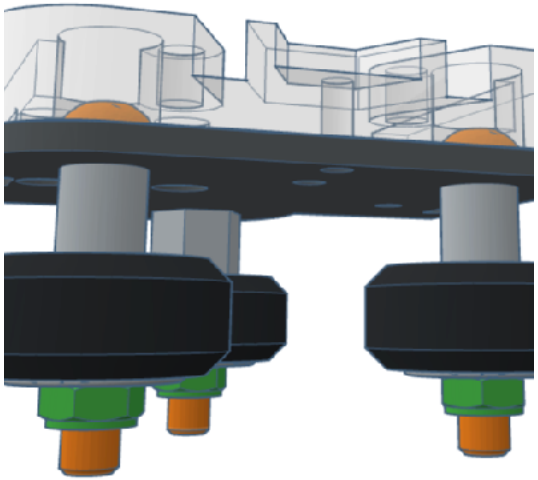

Put the adapter plate onto the metal carriage, and attach it using 2 M5x30 BHCS that hold a M5 spacer, a V-wheel and a M5 hex nut from below.
Leave the nuts loose for now.

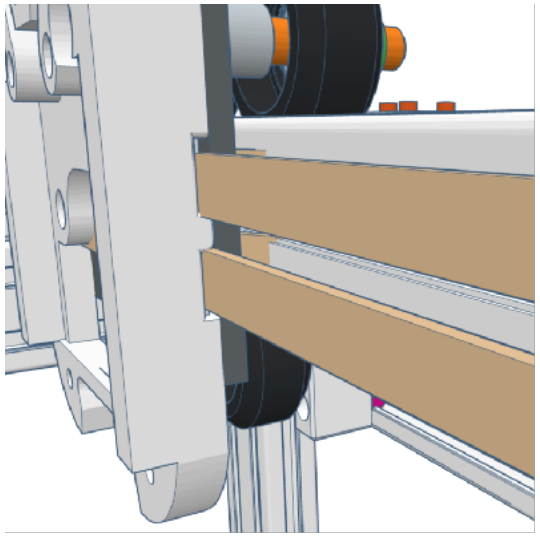

Pass the wheels around the X extrusion, the belts (installed in next section) will pass through the side openings and be folded ont themselves behind the metal plate.
Attach its the ends onto itself with a zip tie.

Once everything is in place, tighten the M5 nuts to secure the wheels onto the extrusion, then proceed to the eccentric setting to adjust the wheels pressure.

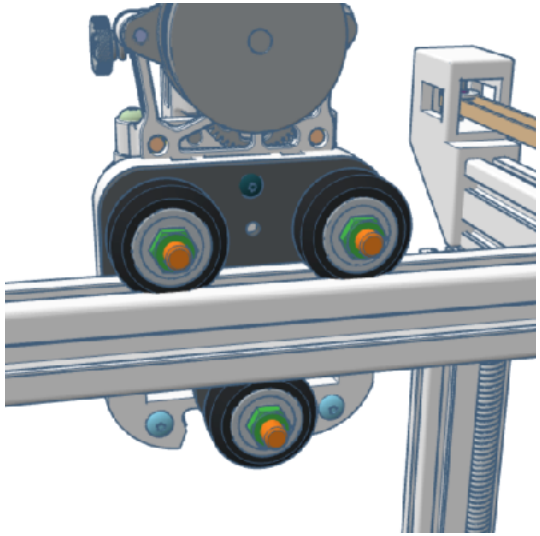

Once assembled, the toolhead will be attached to the carriage using 2 M3x8 SHCS on the bottom, and 1 M3x18 SHCS on the top.