Duender

Blind joints "à la Voron"

ADDON

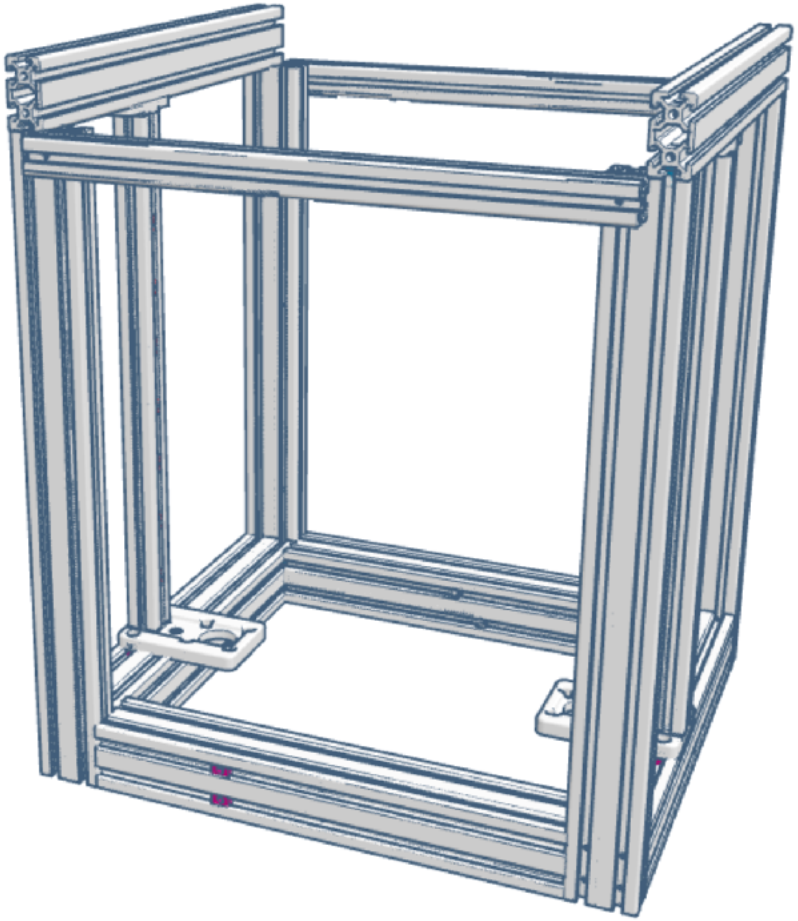

Your Open-Source 2 x Creality Ender-3 core XY conversion

by Sergei Irbis

Caution!

For this method to work, your extrusions cuts must be perfectly square with their body.

If the cut is not 90°, the assembly can not end square!
You can somewhat compensate with a shim where needed, but this solution has its limits, plus it may create unwanted gaps between your extrusions.

TOOLS YOU'LL NEDD:

2mm Allen key

A drill, I went with a **4,2mm bit**, but if you are precise enough, 4mm should be fine.
Note that a drill press will make things way easier, as **it is important to drill straight and square into the extrusions**.

A **M5 tap**, along with its handle, and some **lubricant** to cut the treads into the extrusions channels.

two printed parts to help with the process:

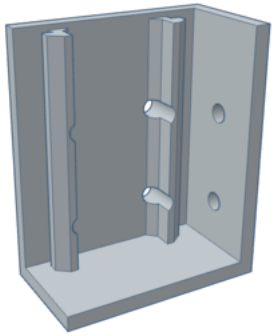

A simple drilling jig, to place the holes without too much thinking.
Many models exist online, some even with bearings to guide you.

A 40x40x20mm dummy to fill the space of 2040 vertical extrusions.
Its holes allow for two **M5x45 SHCS** Ender 3 screws to secure it onto 4040 extrusions sides.

Base structure
Assembling the frame

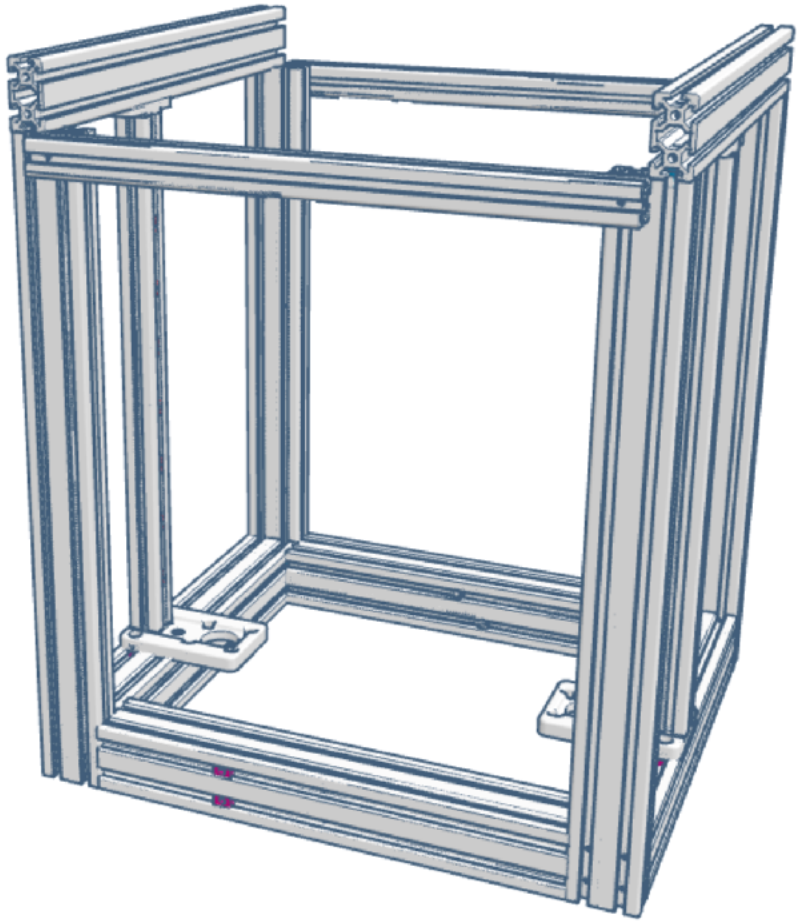

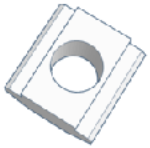

M5 T-slot nut	18

M5x8 BHCS screw	54

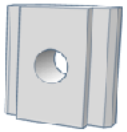

M3 T-slot nut	16

Base structure

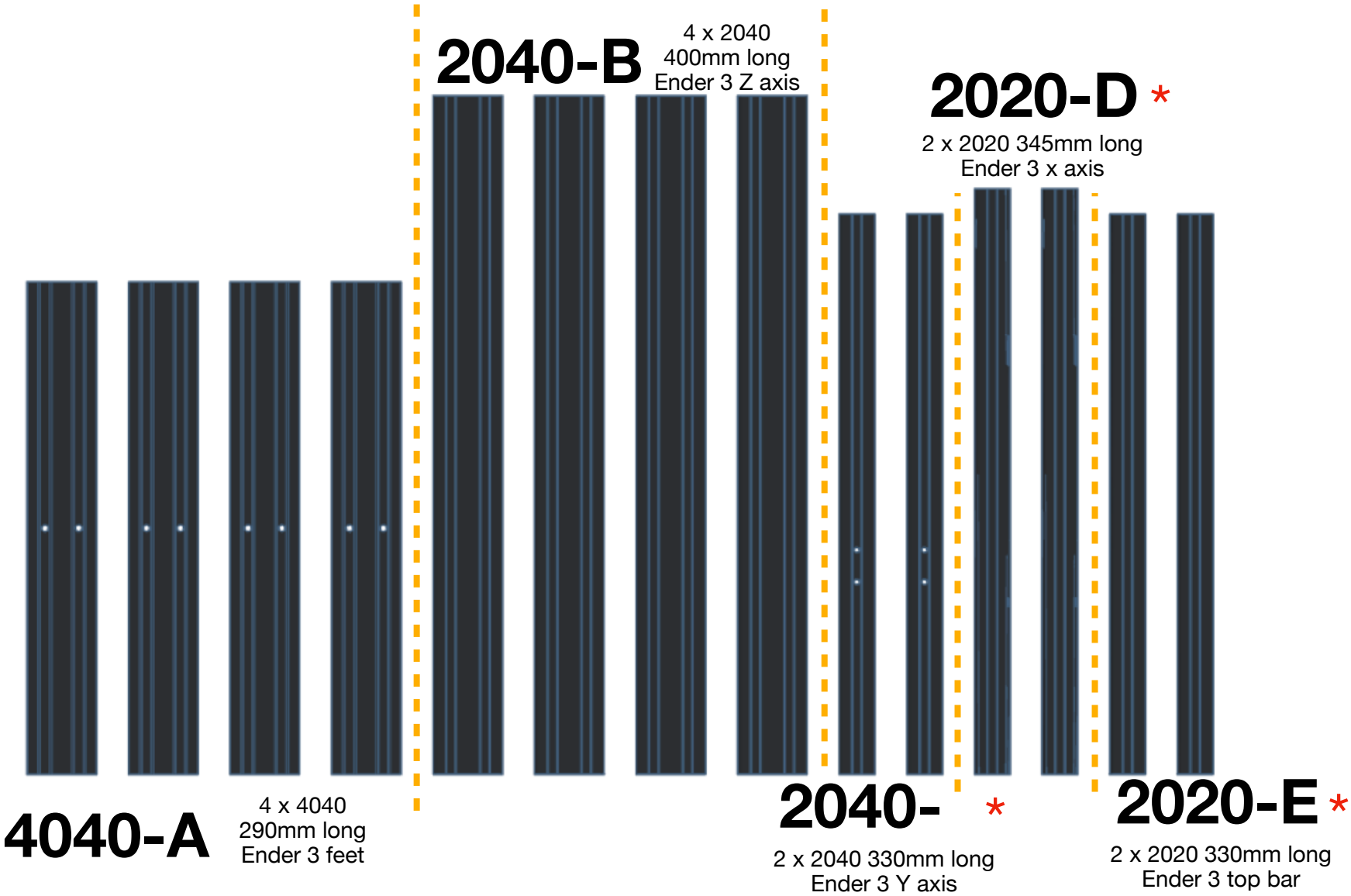

* Extrusions marked with a * need to be M5 tapped at both ends: 2040-C (8 channels), 2020-D (4 channels) and 2020-E (4 channels).

Base structure

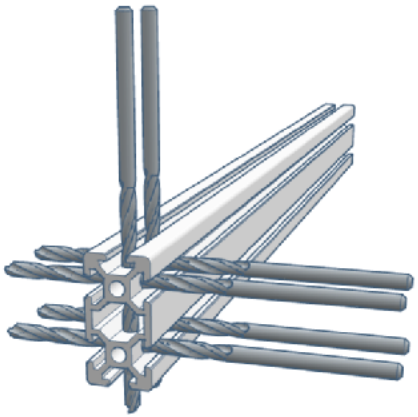

Drill the 400mm 2040 Z posts bases
2 holes in the 20mm side, 4 holes in the 40mm face.

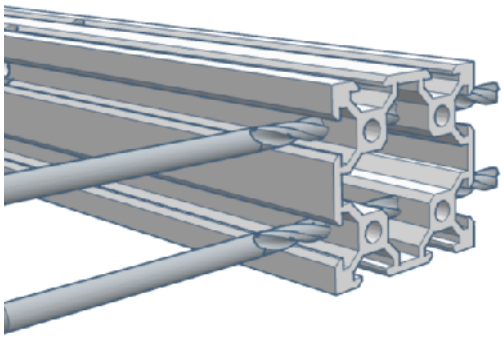

Drill the 4040 side extrusions only.
Each end must be drilled, that's 4 holes total.

The front and back 4040 remain untouched.
Same dimensions and requirements here.

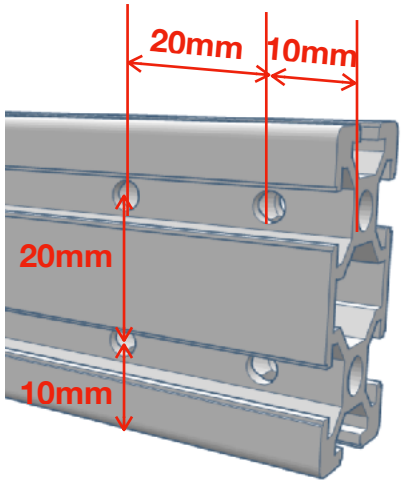

Bottom holes have their centre at 10mm from the base,
Top holes are centred at 30mm from the base.

Of course, all are centred in the middle of the rails.
Be precise when marking or centre-punching those.

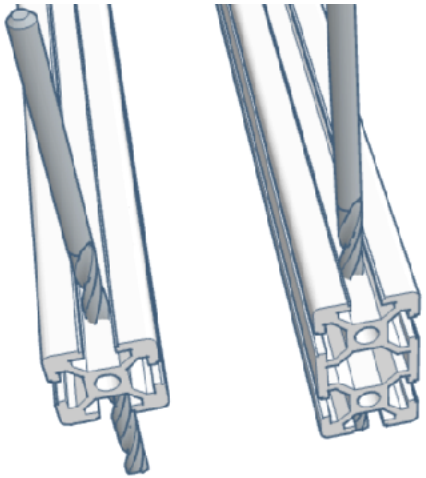

The 330mm 2040 Y and 330mm 2020-E extrusions **only need one hole on each end** (10mm from the end).

Base structure

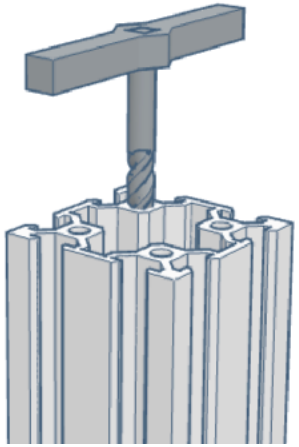

Tap all the 4040 extrusions channels with a M5 bit.
4 extrusions, 4 holes on each side, that's 32 holes to cut threads into.
You will also need to tap the 400mm 2040 channels (16 total), the 330mm 2040 channels (8 more), the 345mm 2020 extrusions (4), and one of the 330mm 2020 (only 2 here). Yes, that's a lot.

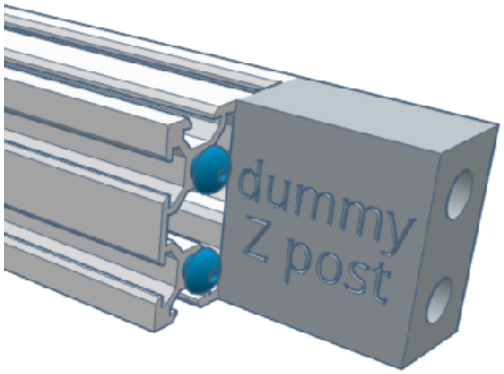

Use the dummy Z post, with two M5x45 screws from the ender 3 frame, and attach it in the front side of the front 4040 extrusion.
Two M5x8 BHCS are inserted in the inner most channels, nearly all the way in.

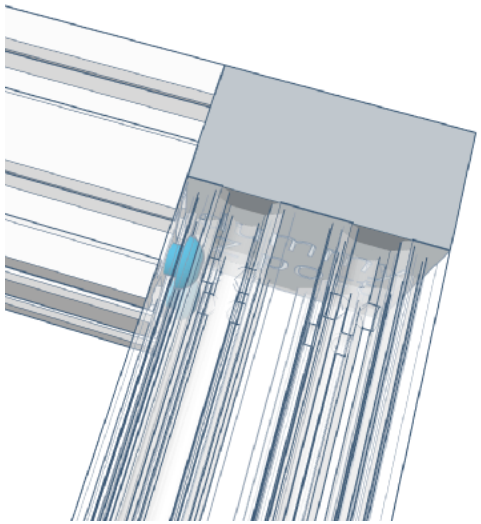

The dummy serves as a stop when sliding the side 4040 onto the BHCS heads.

Press the 4040 as far and flush as possible.

Base structure

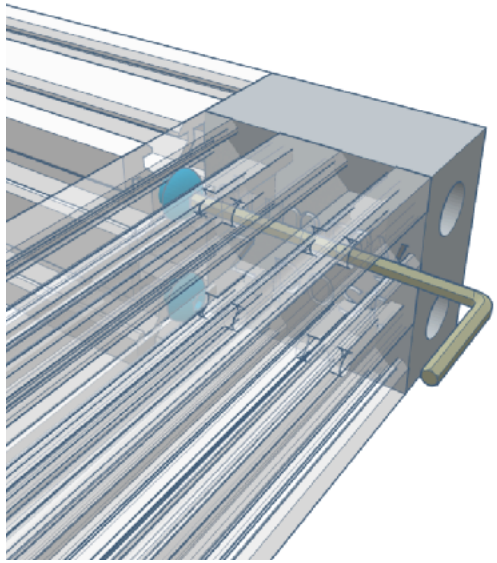

If all measurements are ok, you'll be able to insert your Allen key through the holes and reach the BHCS heads just right.

Maintain extrusions square and flush while tightening, and once both screws are secured, double-check the squareness of the assembly.

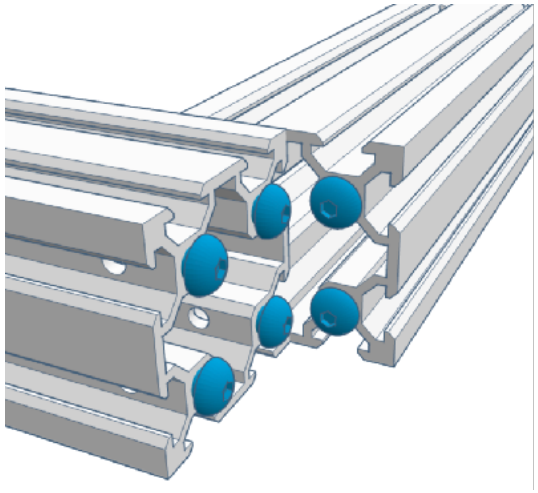

Insert 2 M5x8 BHCS into the remaining channels of the front 4040, and 4 more into the side one.

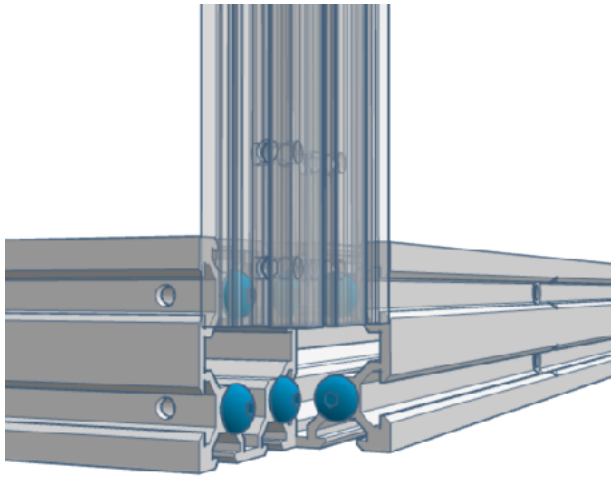

Slide the 400mm 2040 Z posts from the top down onto the BHCS heads.

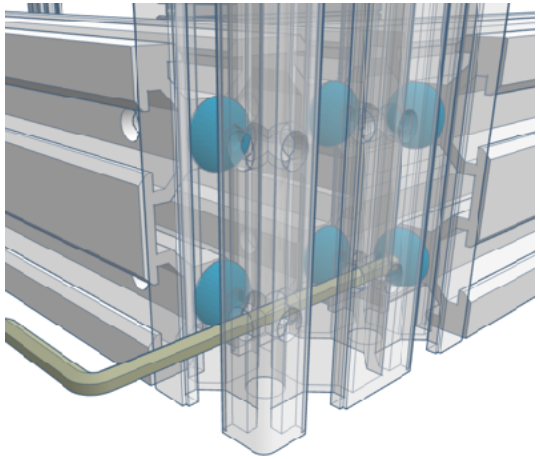

Maintain the extrusions square and flush while using the access holes to tighten the 6 screws.

Base structure

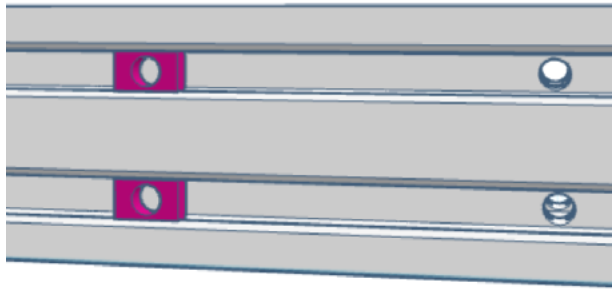

Slide 2 M5 T-slot nuts in the front channels as pictured

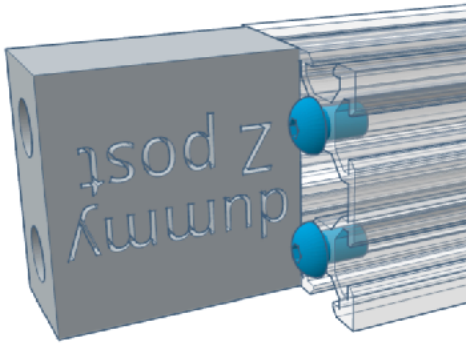

Continue by screwing the dummy on the opposite side of the 4040 front extrusion, and inserting 2 M5x8 BHCS in the inside channels

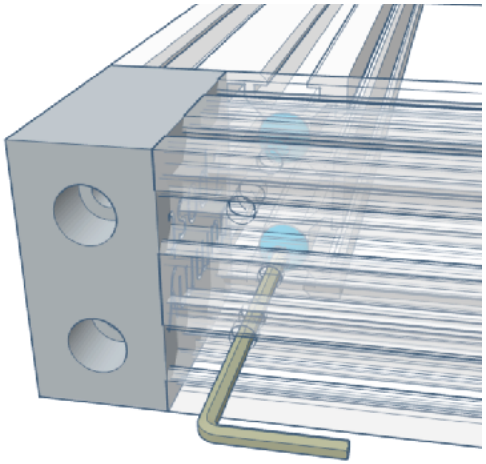

Insert the side 4040 to press against the dummy, and proceed with tightening the screws once you are all flat and flush.

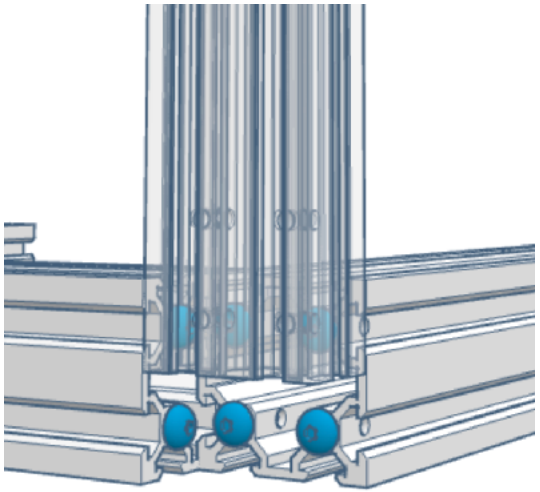

Same as before, insert 6 M5x8 BHCS in the channels once you got the dummy out, insert the front right 2040 by the top and proceed to squaring and assembly

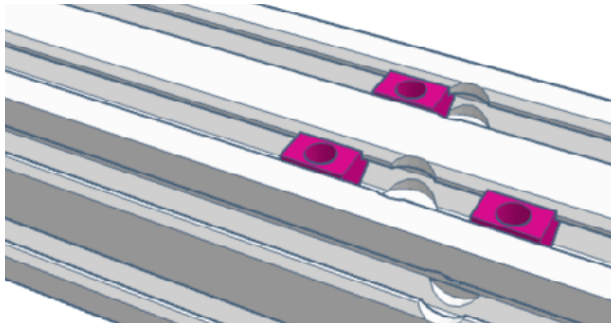

Slide 2 M5 T-slot nuts in the outer top channel and 1 M5 T-slot nut in the inner one of both side extrusion as pictured
(6 M5 T-slot nuts total)

Base structure

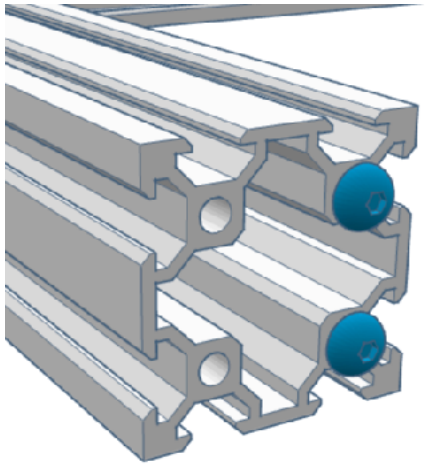

For the rear 4040, insert only the 2 most inner M5x8 BHCS **on each end**

Attach the dummy on one side.
If you print 2 dummies, this step may be made easier by attaching one on each end of the 4040

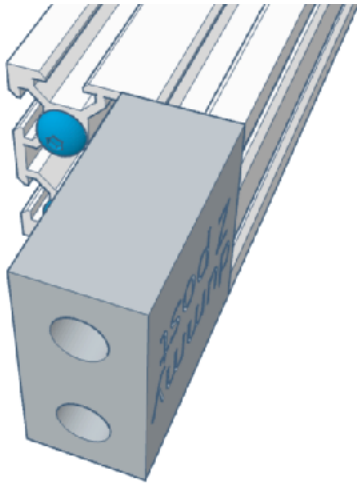

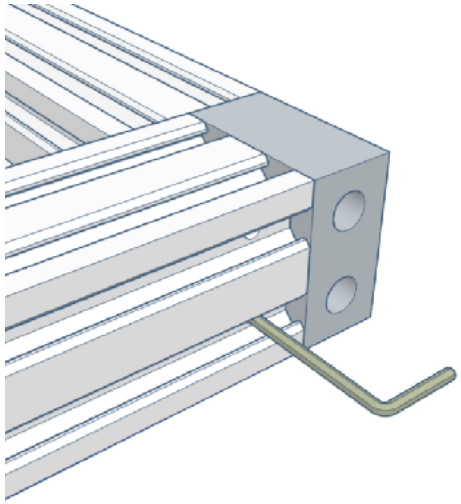

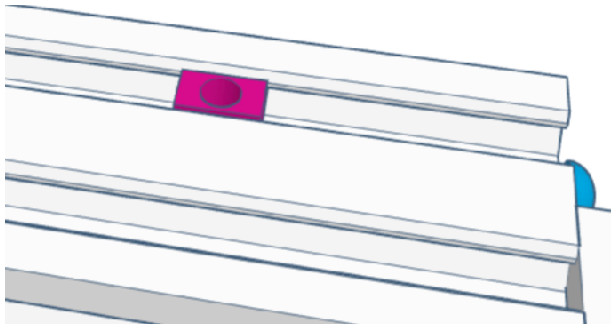

Insert 1 M5 T-slot nuts in the outer top channel of the rear 4040 extrusion.

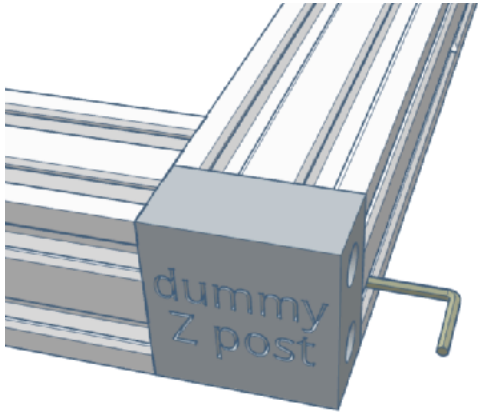

Slide the back 4040 screws heads into the sides 4040 rails up to the dummy.

Double check you're flat and square before tightening the side where the dummy is.

Attach the dummy to the opposite side, triple check for squareness and flatness, the proceed to tightening.

Base structure

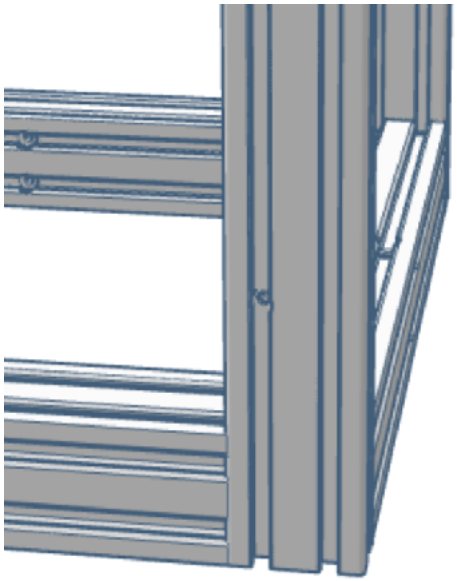

The two back Z posts follow the same process as the front ones.
Mind the placement of the holes in the extrusions to be able to install the PSU later.

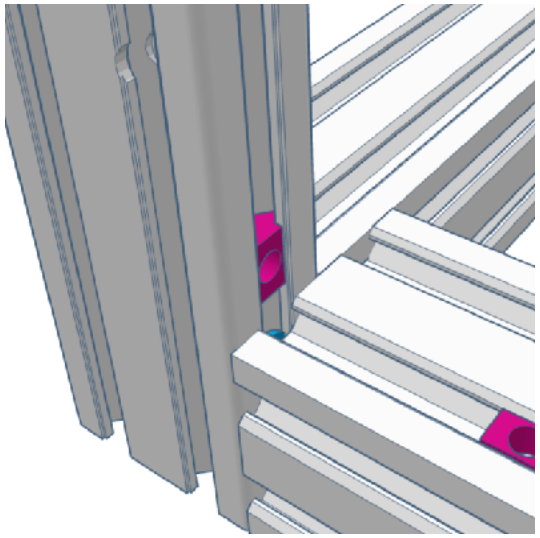

Insert 1 M5 T-slot nut in the inner channel of the **back left Z post (only).**

Install the Z motor mount onto one end of the extrusion, making sure it's seated and flush, then secure it with a single M5x8 BHCS screw
(2 M5x8 BHCS total)

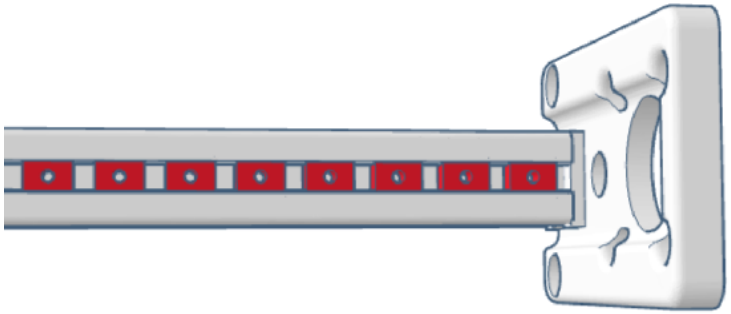

Insert 8 M3 T-slot nuts from the top, facing the same direction the motor is to be mounted.

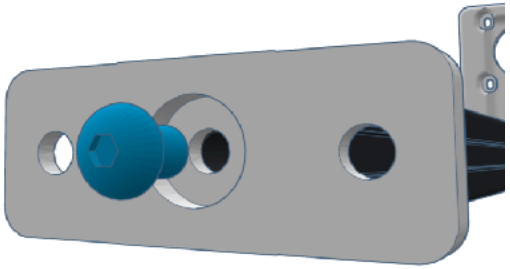

Do the same thing with the Z axis top spacer, as pictured (2 M5x8 BHCS total)

Base structure

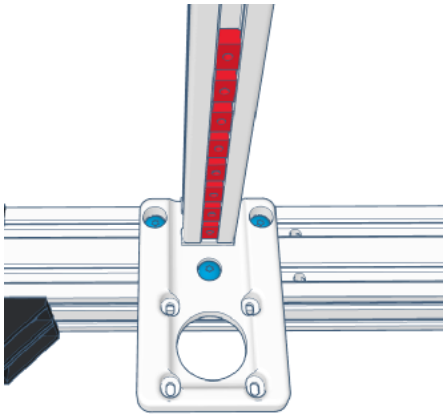

Install the Z axis onto one side of the base
Align the previously installed M5 T-slot nuts with the holes Secure it with three M5x8 BHCS screws
(6 M5x8 BHCS total)
DO NOT FULLY TIGHTEN THE SCREWS YET
The axis needs to be able to slide side to side

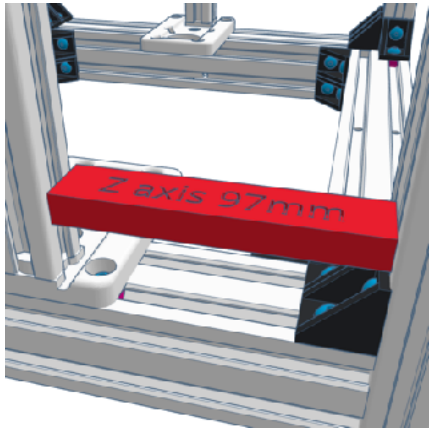

Use the 3D printed spacer provided in the tools
OR a calliper to adjust the Z axis 97mm from the front post, then tighten the 3 M5x8 BHCS screws of the base
This is the default distance. You may need to adjust this distance later, depending on your toolhead configuration

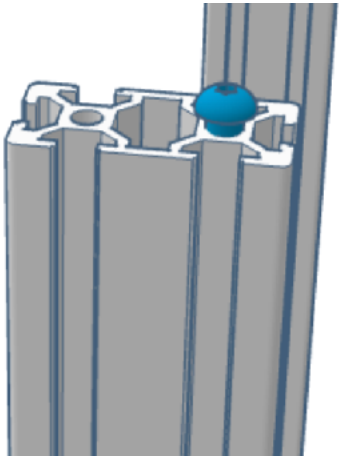

Once your Z axis are sorted, place 1 M5x8 BHCS on top of the outer channel of each 400mm Z post.

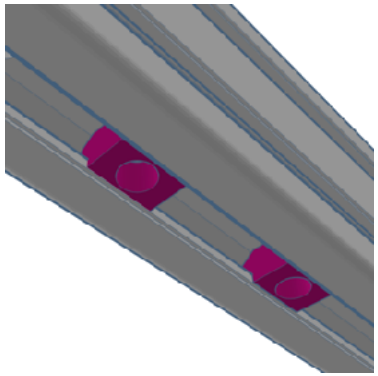

Slide 2 M5 T-slot nuts on the underside of each 330mm 2040 Y axis
(4 M5 T-slot nuts total)

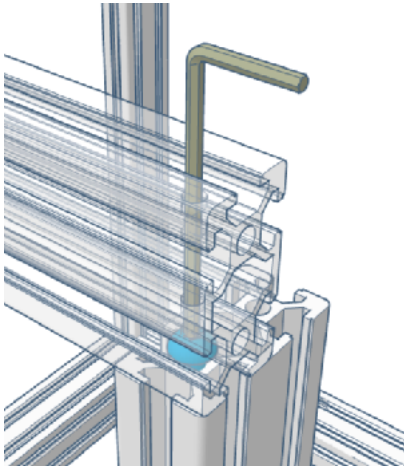

You should the be able to slide the 330mm 2040 Y extrusions onto the screws heads, and once sure they are flush, tighten them in.

Base structure

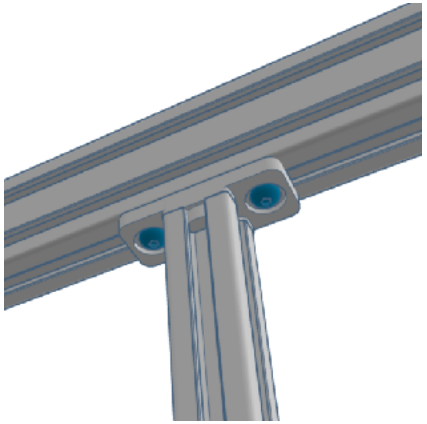

Align the 2 M5 T-slot nuts remaining under the 2040-C with the top Z axis plate, and use 2 M5x8 BHCS screws to secure it

Check the distance to the front post to be 97mm all along the Z axis before tightening the screws

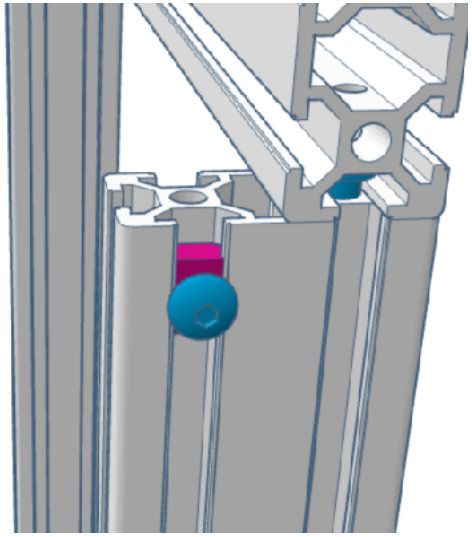

Slide a M5 BHCS+M5 T-slot nut assembly into the outer rail of each back 400mm 2040 Z post

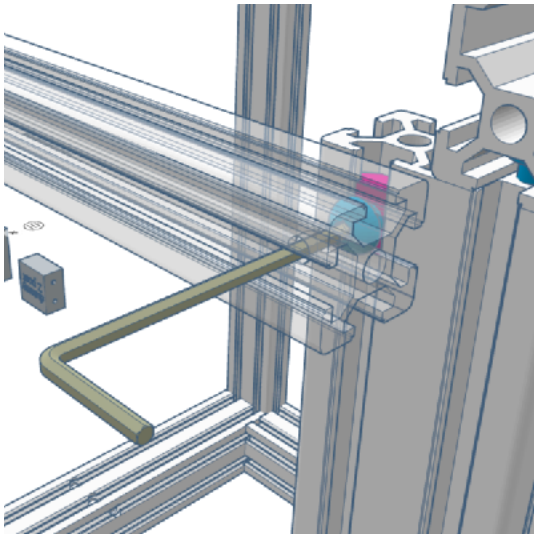

You can now use the access hole into the 330mm 2020-E back brace to secure it to the back of the frame.
Make sure it's level flat and centred.

Repeat those last 2 steps for the front brace.

One last check at every angle and corner that everything is square, straight, flush, level, you name it, and you're good to go.