Duender

V-wheels Z axis

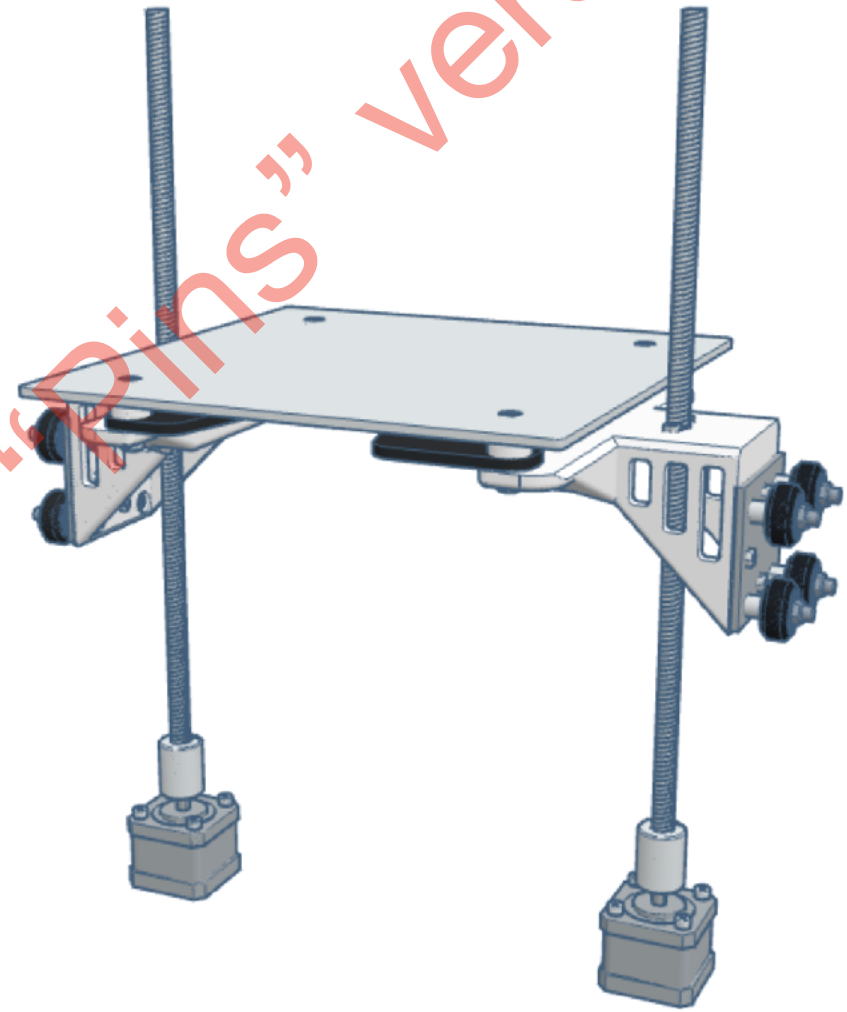

ADDON - "Pins" version

Your Open-Source 2 x Creality Ender-3 core XY conversion

by Sergei Irbis

Assembling the Z axis

Z gantry

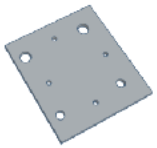	Open Build plates	2
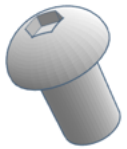	M3x16 BHCS screw	4
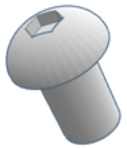	M3x8 BHCS screw	16
	M4 Nylstop nut	4
	M3 Nylstop nut	12
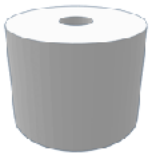	12mm silicone spacers	4
	M4x35 FHCS (from Ender 3)	4
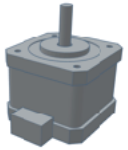	Nema 17 42-34 (from Ender 3)	2
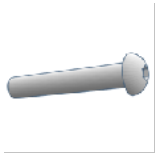	M5x30 BHCS screw (from Ender 3)	8
	M5 Nylstop nut (from Ender 3)	8
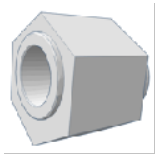	Eccentric M5 nut (from Ender 3)	4
	Wheel M5 spacer (from Ender 3)	4
	POM V-Wheel (from Ender 3)	8
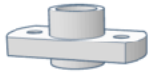	Lead screw nut (from Ender 3)	2
	8mm lead screw (from Ender 3)	2
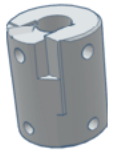	Motor shaft coupler (from Ender 3)	2

Assembling the Z axis

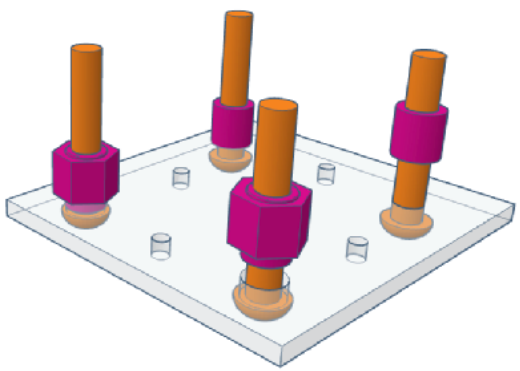

Insert 4 M5x30 BHCS from the underside
Spacers go over the smaller holes and eccentric nuts over the larger ones
Those are all from the original Ender 3 rollers mounts

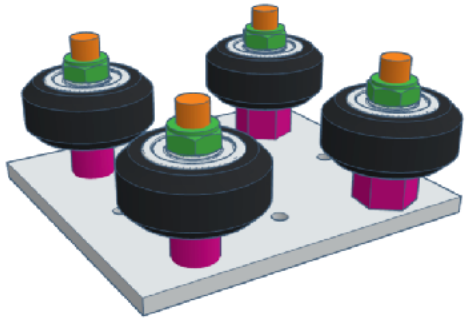

Finally, add 4 V-rollers from your Ender 3, and an M5 Nylstop (self-locking) nut
DO NOT TIGHTEN THE NUTS YET, you need the whole screws/wheels to be loose

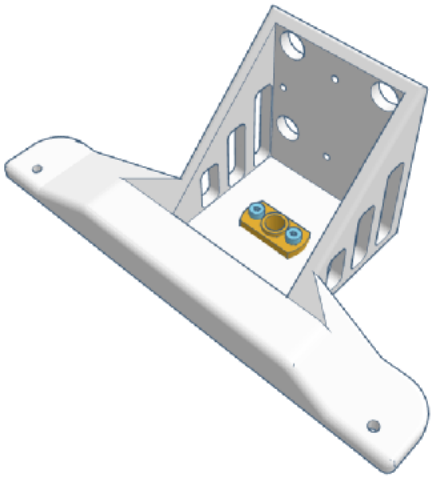

Install the lead screw nuts under the plastic bed holders, and insert 2 M3x16 SHCS or BHCS screws (Or you can use the ones originally coming from your Ender 3)

If you lead screws aren't perfectly straight, it is advised that you swap the original lead screw nuts from the Ender 3 with some anti-backlash ones, to avoid Z wobble

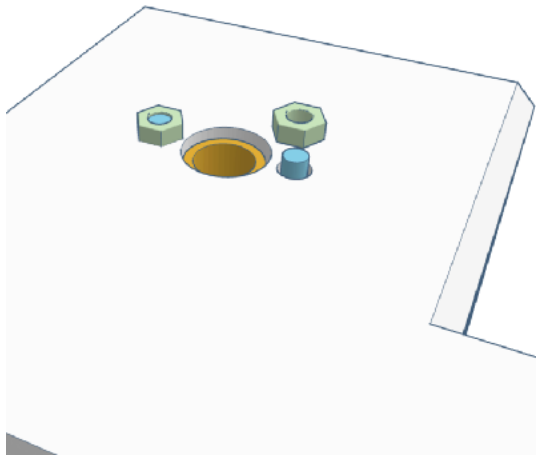

Turn the bed holders around being careful not to lose the screws and secure them with M3 nuts

Assembling the Z axis

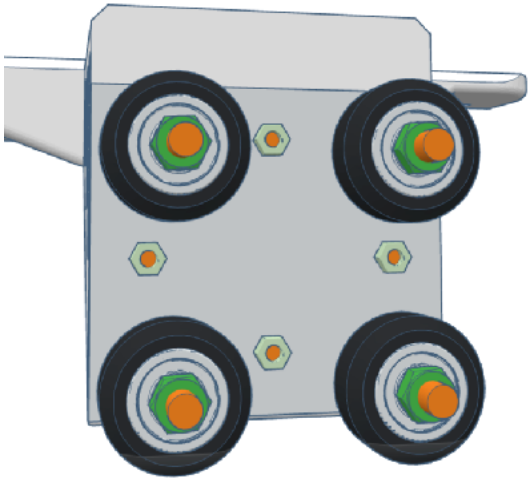

Place the rollers plate behind the bed holder and use 4 M3x8 BHCS screws to hold it
Secure the screws with 4 M3 nuts

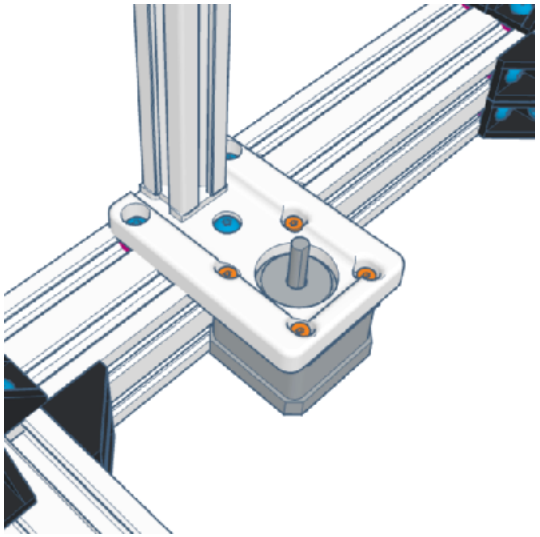

Place the Z motors under their plates and use 4 M3x8 BHCS screws to secure them. Orient the motor plug to the back of the printer

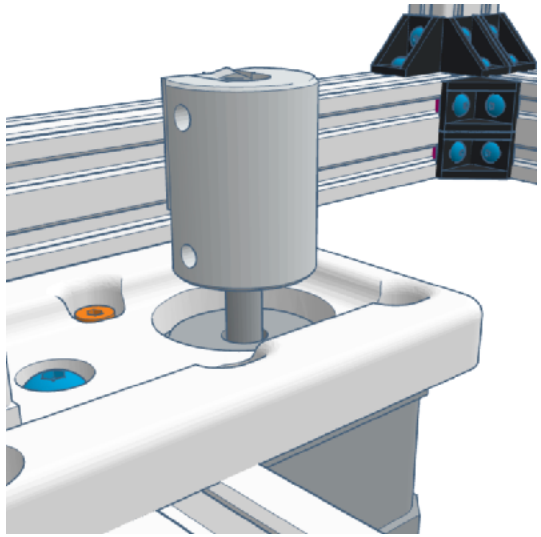

Install the lead screws couplers onto the Z motors shafts and tighten only the lower screw

If your lead screws aren't perfectly straight, you may want to replace those with "spring" or "elastic" ones to avoid Z-wobble

Assembling the Z axis

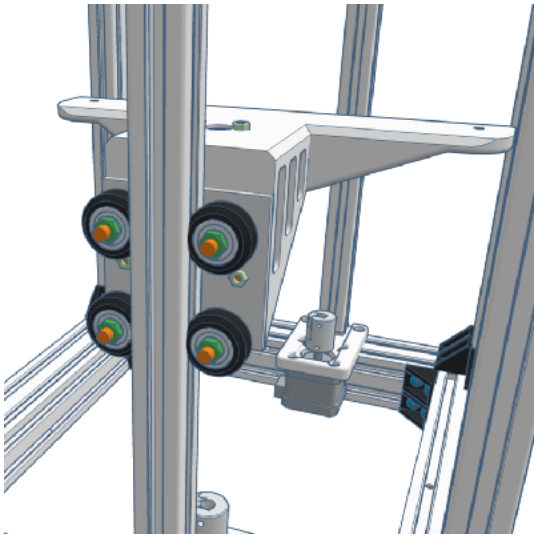

Insert the bed holder assembly onto the Z axis (note that the longer side goes towards the front) and tighten the V-wheels
Once secured, adjust the eccentric nuts to ensure all 4 wheels apply equal pressure

The wheels should rotate smoothly with a slight resistance when turned by hand

Double check that the screws heads don't touch the extrusion surface.

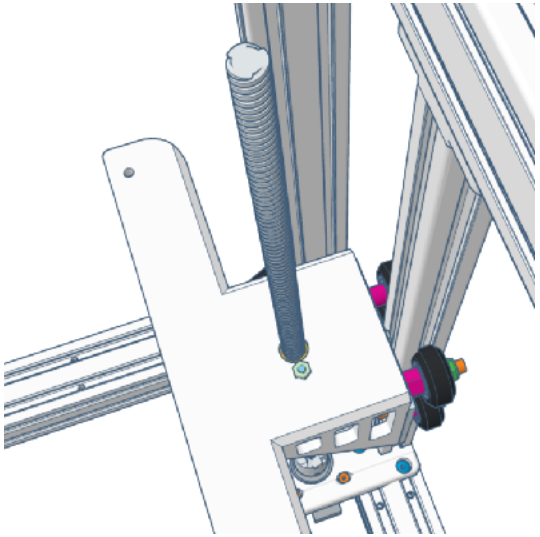

Insert the lead screws into the lead screws nut from the top then insert them into the Z motor coupler by rotating them all the way down

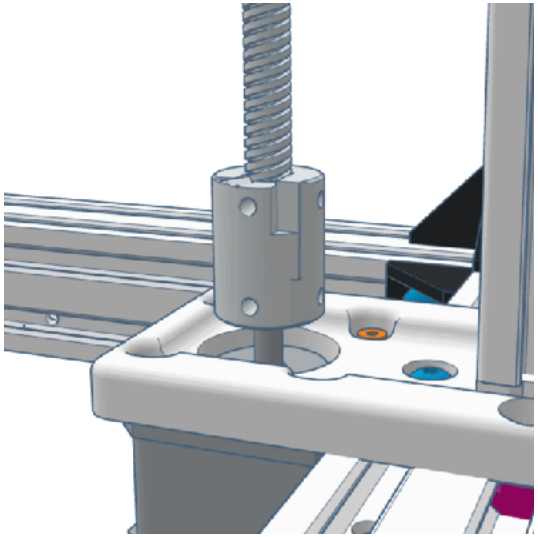

Tighten the upper screw of the coupler to hold the lead screw

Assembling the Z axis

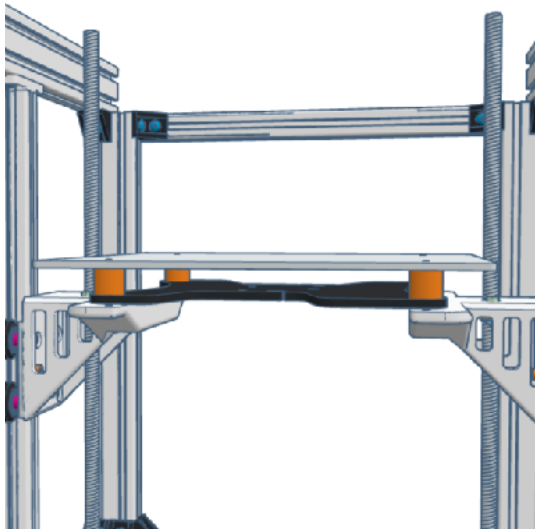

Place the Ender 3 Y plate onto the bed holders, 4 silicone spacers -here 12mm shown in orange (you may use the springs from the Ender 3) then the heatbed
Of course, the wiring of the heatbed should end towards the back of your printer

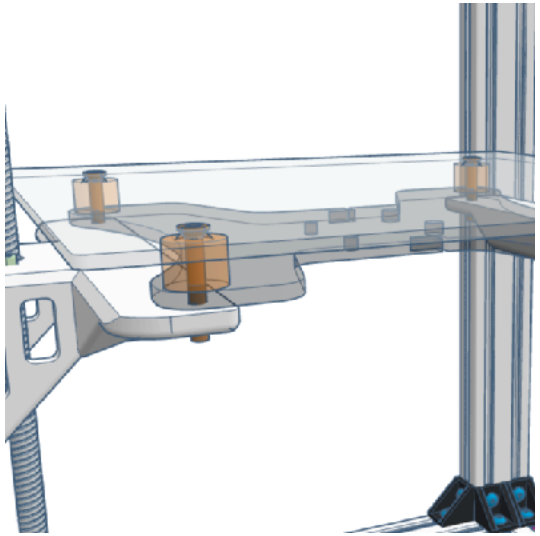
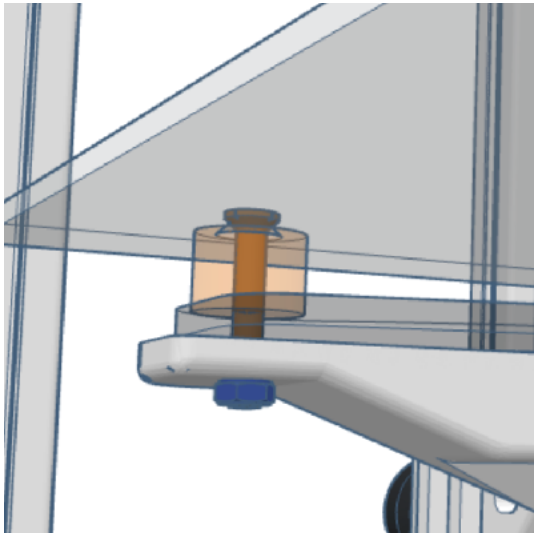
Use the original 4 M4x35 FHCS screws and secure them under the bed holders with M4 nuts