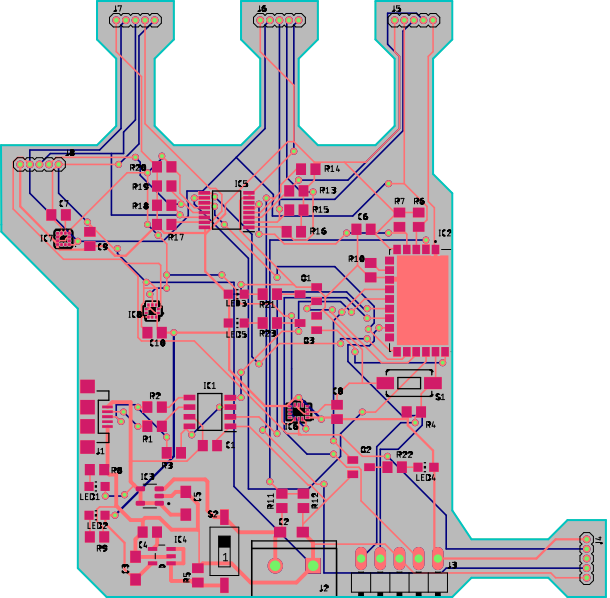
J7
J6
J5
J8
R20
R19
R18
C7
IC7
C9
R17
IC5
R14
R13
R15
R16
C6
R7
R6
IC2
R10
C1
LED3
R21
LED5
R23
C3
IC0
C10
IC1
R2
R1
J1
R8
R3
IC3
LED1
LED2
R9
C4
IC4
C5
U5
S2
R11
R12
C2
J2
J3
J4
S1
C8
IC6
R4
Q2
R22
LED4

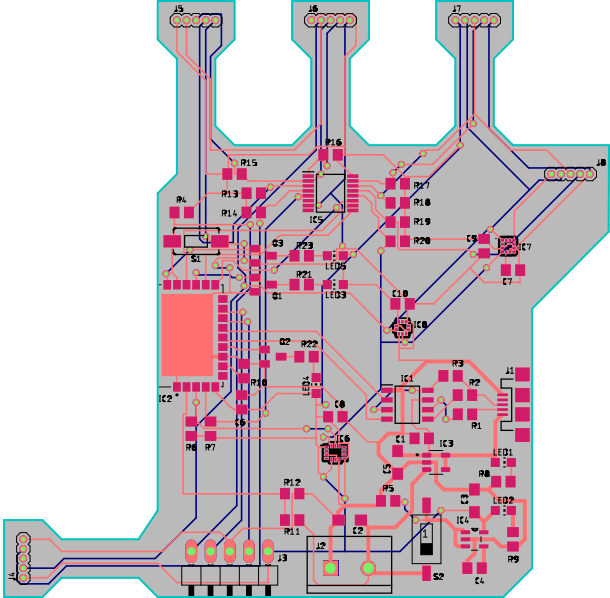
J5
J6
J7
J8
R16
R15
R4
R13
R14
IC5
R17
R18
R19
R20
C5
IC7
C7
S1
C3
R23
LED5
R21
C1
LED3
C10
IC0
Q2
R22
R3
J1
R2
IC1
R1
IC2
R10
C8
IC6
C6
R8
R7
C1
IC3
LED1
U5
R8
R12
R5
C3
LED2
IC4
R11
C2
J2
S2
R9
C4
J3
J4