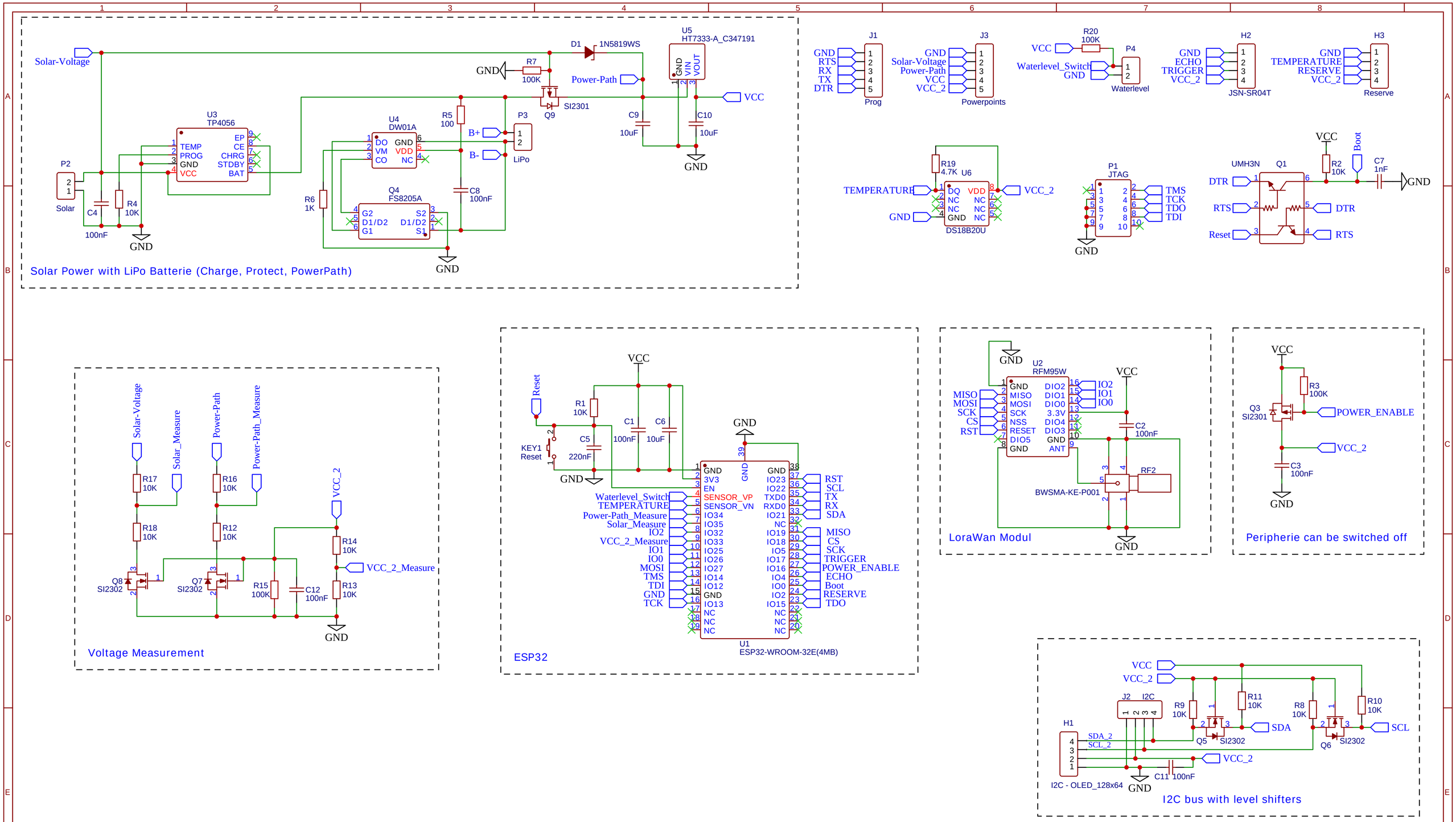


| | |
|---|---|
| TITLE: Esp32LoraBoard | REV: 2.0 |
| Company: Viktor Rees | Sheet: 1/1 |
| Date: 2021-12-29 Drawn By: vrees | |