TSCINBUNY

SMART ROBOT PROGRAMMING LEARNING

Manual & Tutorial

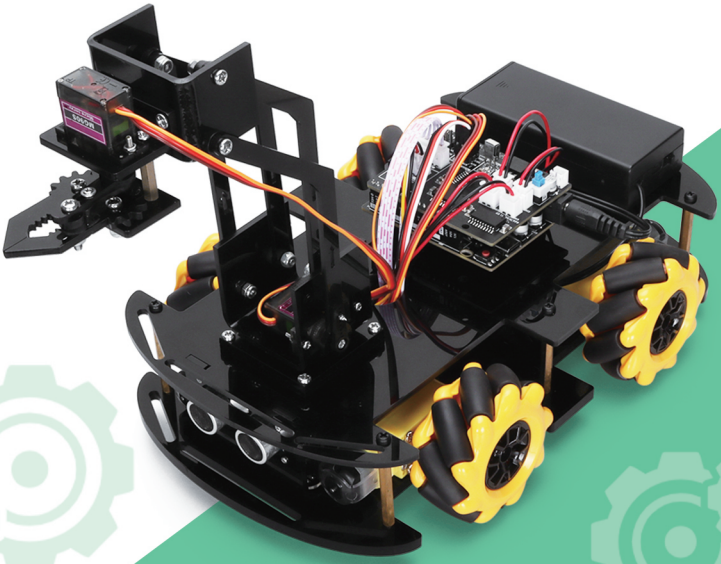

www.zhiyi.ltd

Home | Product Show | Contact us | about us | Download

Video presentation

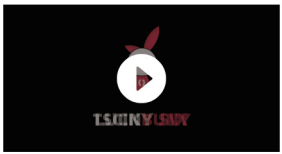

ZYC0072

Document download

ZYC0072 Download

1. Search for "www.zhiyi.ltd"

or

Scan the QR code with your phone

2. Click on "Download"

3. Enter the password "ZHIYI123"

4. Find the model number "ZYC0072"

Product list

M3*30 round head screw*8pcs

M3*16 round head screw*8pcs

M3*12 round head screw*10pcs

M3*10 flat head screw*10pcs

M2.5*20 round head screw*4pcs

M2*10 round head screw*6pcs

M1.6*10 Round head screw*4pcs

M3*8 Round head screw*20pcs

M3*6 Round head screw*6pcs

M3 Lock Nut*10pcs

M3 Nut*22pcs

M2 Nut*6pcs

M1.6 Nut*4pcs

M3*40 Copper column*6pcs

M3*20 Copper column*2pcs

M3*10 Copper column*3pcs

Motor frame*4pcs

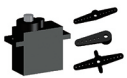
Servo*3pc

Tracking module*1pc

battery pack*1pc

Ultrasonic bracket*1pc

Ultrasonic module*1pc

bluetooth module*1pc

top plate*1pc

Motor with 2P terminal wire *4pcs

Robotic arm parts*1pc

Chassis bearing ring*1pc

bottom plate*1pc

The McKnum Wheel (With coupling)*4pcs

Robotic arm chassis bracket*1pc

Red and white lines 5P double head reverse*1pc

Main control board*1pc

Infrared remote controller*1pc

Pliers chassis*2pcs

3P servo extension cable*1pc

Expansion board*1pc

type-c line*1pc

Sleeve * 1pc
Phillips screwdriver*1pc

4P with terminal Dupont wire*1pc

Install the motor

① M3 Nut*8pcs

② M3*30 round head screw*8pcs

③ Motor frame*4pc

④ Motor*4pc

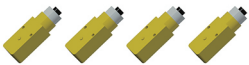

⑤ Phillips screwdriver*1pc

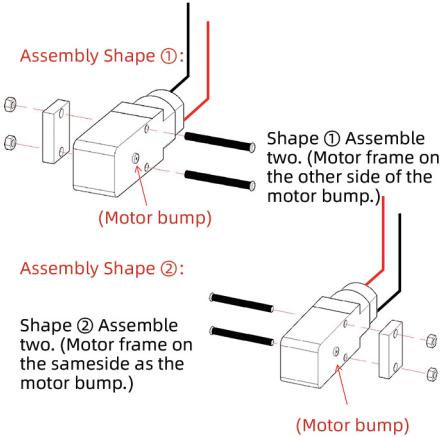

Note: Note the difference in shape between the two.

Fixed motor

① M3*8 Round head screw*8pcs

② Bottom plate*1pc

(Remove the board from the set and remove its protective film)

③ Phillips screwdriver*1pc

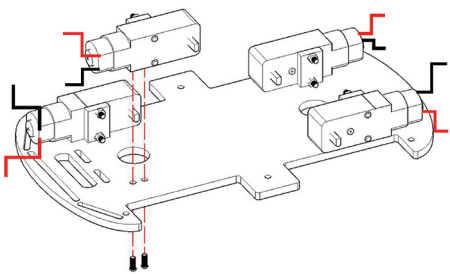

Fix the motor on the bottom plate, align the hole of the aluminum block with the small rectangular hole on the board, then align the hole with the screws, and finally reinforce it with a small screwdriver.Install the four motors in the same way.

Note: Notice the line orientation of the motor at the corresponding position.

Install the tracking module

① M3 Nut*4pcs

② M3*16 round head screw*2pcs

③ Tracking module*1pc

④ Red and white lines
5P double head reverse*1pc

⑤ Phillips screwdriver*1pc

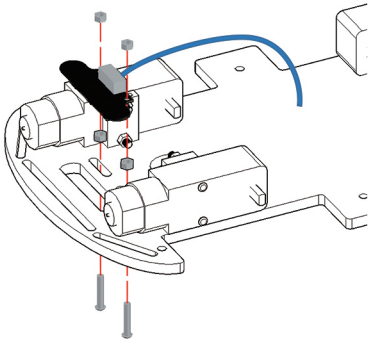

First pass the screw through the bottom hole, lock the nut, do not need the lock to fix, then screw the two holes of the tracking module, lock the remaining two nuts, and use the screwdriver for reinforcement. Finally, insert the dupont wire into the pin of the tracking module.

Install copper pillar on the bottom plate

① M3*40 Copper column*6pcs

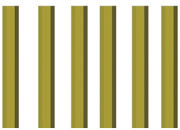

② M3*8 Round head screw*6pcs

③ Phillips screwdriver*1pc

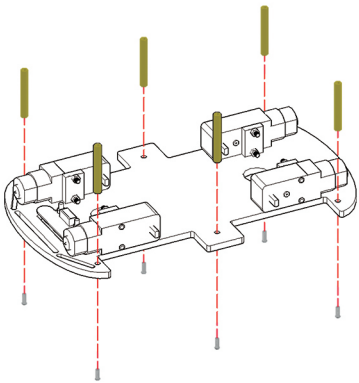

First pass the screw through the hole from the bottom, then hold the copper column to align the screw for preliminary fixation, and finally reinforce it with a screwdriver.

At this point, the installation of the bottom plate has been completed.

Install mainboard and expansion board

① M3*10 Copper column*3pcs

② M3*6 Round head screw*6pcs

③ Main control board*1pc

④ Expansion board*1pc

⑤ Top plate*1pc

⑥ Phillips screwdriver*1pc

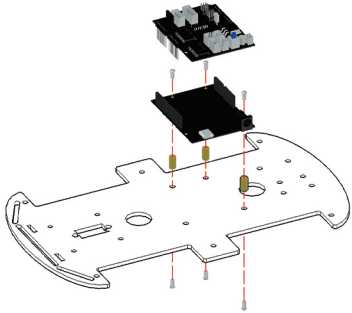

First, fix the copper column in the corresponding position of the bottom plate. Then place the mainboard on the copper column, align the holes, screw the screws, and reinforce the holes with a screwdriver. Finally, insert the expansion board into the mainboard.This time you can burn the infrared code.

Note: Note the orientation of the main board and expansion board. Also be careful not to insert the expansion board incorrectly

Installing the Battery pack

① M3*10 flat head screw*4pcs

② M3 Nut*4pcs

③ Battery pack*1pc

④ 18650 3.7V Battery*2pcs

⑤ Battery cover*1pc

⑥ Phillips screwdriver*1pc

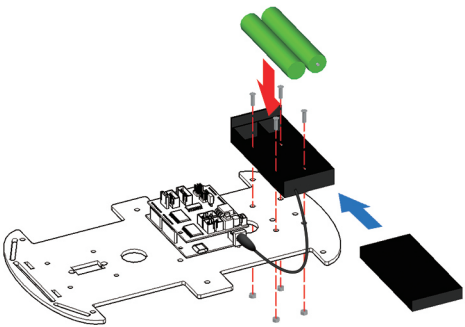

When you get the battery pack, open the cover first, align the hole in the battery pack with the hole in the board, and then pass the screw from the top down. Finally, align the screw with the nut with one hand, and reinforce it with a screwdriver with the other hand. Put the battery into the battery case first, and then put the battery cover on.Plug the battery box's port cable into the mainboard.

Install Servo

① Robotic arm servo bracket*1pc

② Servo*1pc

③ M2*10 round head screw*2pcs

④ M2 Nut*2pcs

⑤ Phillips screwdriver*1pc

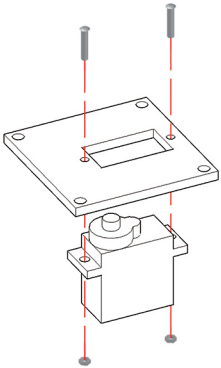

Push the servo through the part, then push the screw through the corresponding hole from top to bottom, then lock the nut, and finally reinforce it with a screwdriver.

Note: Note the orientation of the servo.

Install Servo

① Robotic arm chassis *2pcs

② M3*16 round head screw*4pcs

③ M3 Nut*4pcs

④ Phillips screwdriver*1pc

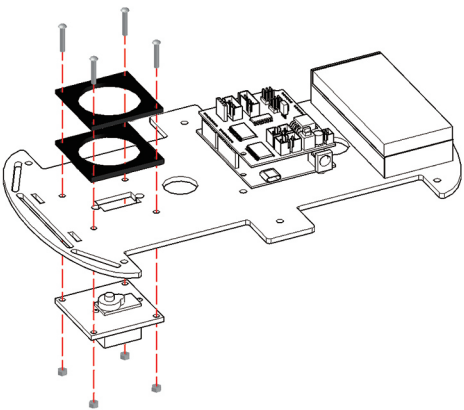

Align the holes of each part with the holes of the board, then pass the screws from the top down, lock the nuts, and finally reinforce them with a screwdriver.

Note: Note the position of the servo.

Install Servo head

① Servo head*1pc

② Servo with small screws*1pc

③ Robotic arm Chassis ring*1pc

④ Chassis bearing ring*1pc

⑤ Phillips screwdriver*1pc

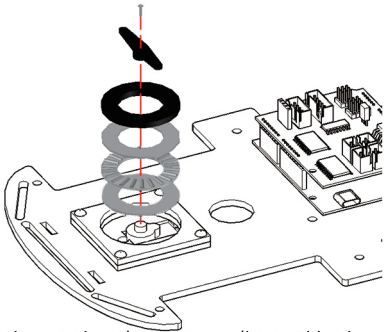

Put each ring part into the corresponding position in turn, then insert the servo head into the servo, and finally screw on the small screw.

Note: Before inserting the servo head, the servo wire needs to be inserted into the expansion board first. After powering on, the servo will rotate to the initial value, and then insert the servo head according to the position above.For the wiring position, see the subsequent wiring diagram.

Assembling ultrasonic module

① Ultrasonic module*1pc

② Ultrasonic bracket*1pc

③ M1.6*10 Round head screw*4pcs

④ M1.6 Nut*4pcs

⑤ 4P with terminal Dupont wire*1pc

⑥ Phillips screwdriver*1pc

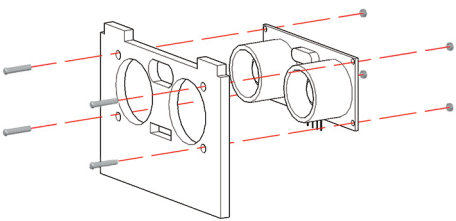

First the ultrasonic module through the bracket, initially fixed, and then screw, and then lock the nut. Use a screwdriver for reinforcement.Finally, the dupont wire is inserted into the pin of the ultrasonic module.

Note: the parts used in this step are small and need more patience.

Fix top plate and bottom plate

① M3*8 Round head screw*6pcs

② Phillips screwdriver*1pc

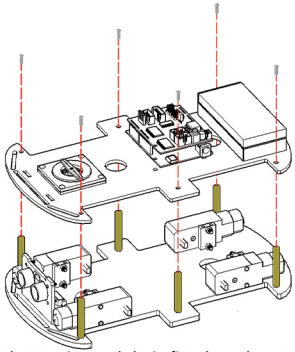

First, the ultrasonic module is fixed on the top plate as shown.Lay the bottom plate flat, align the holes of the top plate with the holes of the copper column, and lock them accordingly. Finally, use a screwdriver for reinforcement.

Note: Before fixing the upper and lower plates, thread the wires through the two round holes in the top plate to facilitate subsequent wiring.

Connect the line

As shown in the figure above, insert each module into the corresponding position, and do not check the wrong position of the motor line.

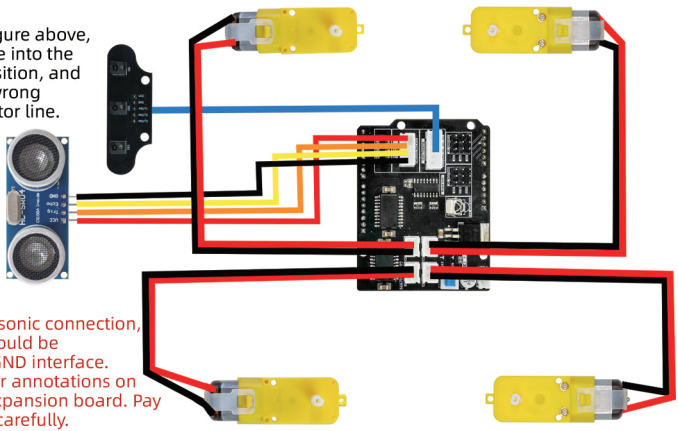

Note: For the ultrasonic connection, the black cable should be connected to the GND interface. There are character annotations on the module and expansion board. Pay attention to them carefully.

Install the arm pliers

① Pliers bracket*1pc

② Pliers*2pcs

③ Small circular pad*2pcs

④ M3*12 round head screw*2pcs

⑤ M3 Lock Nut*2pcs

⑥ Phillips screwdriver*1pc

⑦ Sleeve * 1pc

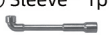

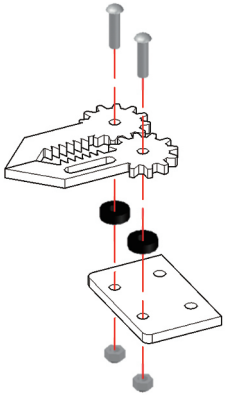

Put the screws through each part in turn as shown in the figure, then screw the self-locking nut, and use a screwdriver to reinforce it.

Note: There is no need to tighten it too tightly.

Install the pliers servo

① Pliers chassis I *1pc

② Small round handle*1pc

③ Servo*1pc

④ M2*10 round head screw*2pcs

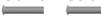

⑤ M2 Nut*2pcs

⑥ Servo matching small screw *2pcs

⑦ Servo supporting servo bracket*1pc

⑧ Phillips screwdriver*1pc

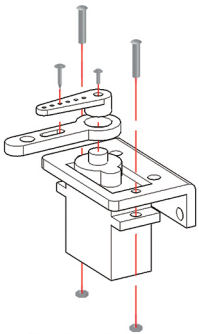

First, the servo is fixed on the parts with M2 screws and M2 nuts, then the servo bracket is fixed on the small round handle with pointed screws, inserted into the servo, and finally fixed with small screws.

Note: Before inserting the servo head, the servo wire needs to be inserted into the expansion board first. After powering on, the servo will rotate to the initial value, and then insert the servo head according to the position above.For the wiring position, see the subsequent wiring diagram.

Install the arm pliers

① M3*10 flat head screw*4pcs

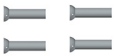

② M3*20 Copper column*2pcs

③ M3*16 round head screw*1pc

④ Small circular pad*1pc

⑤ M3 Nut*1pc

⑥ Phillips screwdriver*1pc

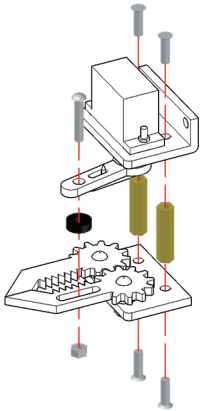

First fix the copper column, then align the upper two holes with the copper column, lock the nut, and reinforce it with a screwdriver. Then fix the M3*12 screw through the corresponding holes and parts as shown in the figure.

Fixed pliers

① M3*10 flat head screw*2pcs

② M3 Nut*2pcs

③ Pliers chassis II *1pc

④ Phillips screwdriver*1pc

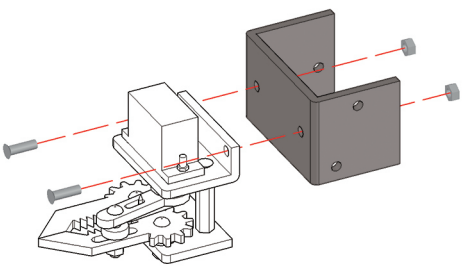

Push the screws through the holes in the figure, lock the nuts, and tighten them with a screwdriver.

Note: Pay attention to the direction of the pliers support and the position of the hole, do not install the wrong.

Install the robotic arm bracket

① Small circular pad*1pc

② M3*12 round head screw*1pc

③ M3 Lock Nut*1pc

④ Robotic arm bracket*1pc

⑤ Phillips screwdriver*1pc

⑥ Sleeve * 1pc

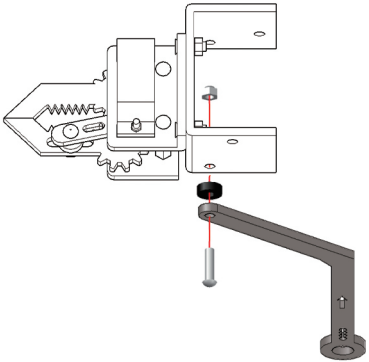

As shown in the figure, pass the screws through the holes of each part, lock the nuts, and reinforce them with a screwdriver.

Note: Note the direction of the support, with the arrow pointing upwards; At the same time, the nut should be fixed when the screw is screwed.

Install the robotic arm bracket

① Small circular pad*3pcs

② M3*12 round head screw*3pcs

③ M3 Lock Nut*3pcs

④ Robotic arm bracket*3pcs

⑤ Phillips screwdriver*1pc

⑥ Sleeve * 1pc

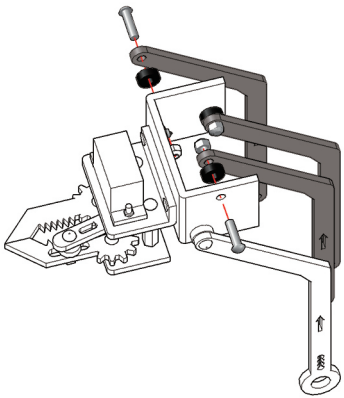

As shown in the figure, pass the screws through the holes of each part, lock the nuts, and reinforce them with a screwdriver.

Note: Note that two brackets are installed on the outside and two on the inside; When using a screwdriver for reinforcement, secure the nut.

Install the robotic arm chassis

① Robotic arm chassis bracket*1pc

② Servo matching small screw *2pcs

③ Phillips screwdriver*1pc

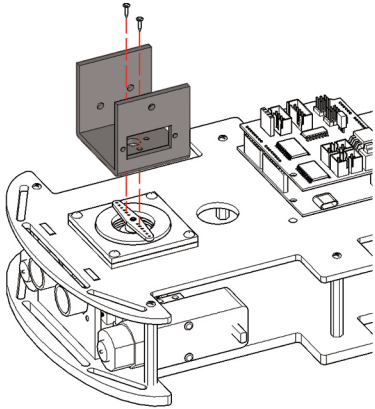

Align the screws with the holes in the figure above, tighten them, and tighten them with a screwdriver.

Note: Note the orientation of chassis parts.

Install Servo

① Servo*1pc

② M2*10 round head screw*2pcs

③ M2 Nut*2pcs

④ Phillips screwdriver*1pc

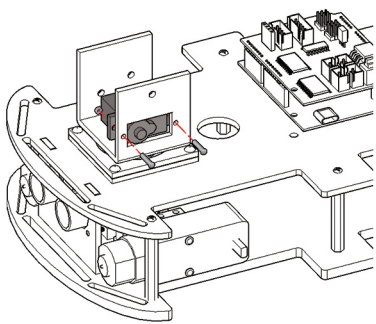

Place the servo in the position shown above, then push the screw through, lock the nut, and finally reinforce with a screwdriver.

Note: Note the orientation of the servo.

Fixed the robotic arm bracket

① Servo matching small screw *2pcs

② Servo supporting servo bracket*1pc

③ Phillips screwdriver*1pc

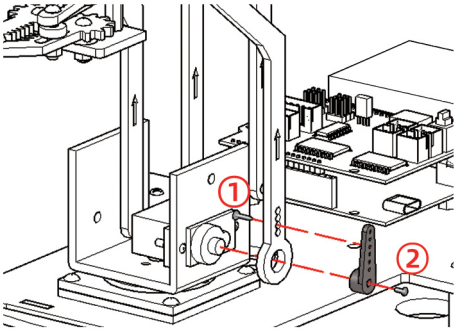

First, screw I is used to fix the servo bracket and the robotic arm bracket, then the servo bracket is inserted into the servo, and finally screw II is locked.

Note: Before inserting the servo head, the servo wire needs to be inserted into the expansion board first. After powering on, the servo will rotate to the initial value, and then insert the servo head according to the position above.For the wiring position, see the subsequent wiring diagram.

Fixed the robotic arm bracket

① Small circular pad*3pcs

② M3*12 round head screw*3pcs

③ M3 Lock Nut*3pcs

④ Phillips screwdriver*1pc

⑤ Sleeve * 1pc

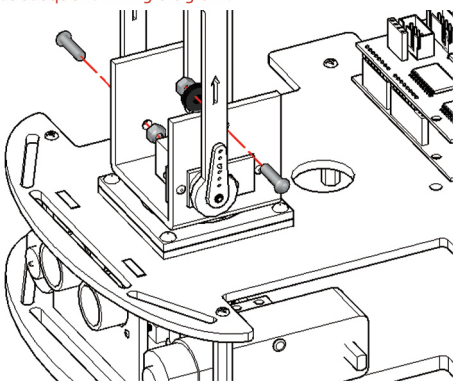

Screw through each part in turn as shown in the figure, lock the nut, and reinforce with the screw; Three bracket were fixed in the same way

Note:When using a screwdriver for reinforcement, secure the nut.

Connect the line

① 3P servo extension cable*1pc

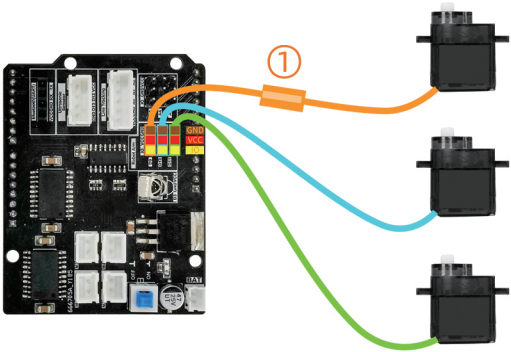

The top servo line is not long enough, so you need to use ① extension cord; The extension wire is connected with the servo line color; Then the wire is inserted into the expansion board, and the three servos from top to bottom correspond to ports D9,D10 and D11 respectively.

Note: servo red wire is connected to VCC; The black (brown) wire connects to GND.

Install the wheel

① The McKnum Wheel (With coupling)*4pcs

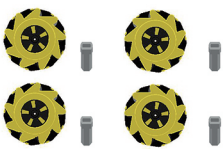

② 2.5*20 round head screw*4pcs

③ Phillips screwdriver*1pc

Pay attention to the direction of the wheels.

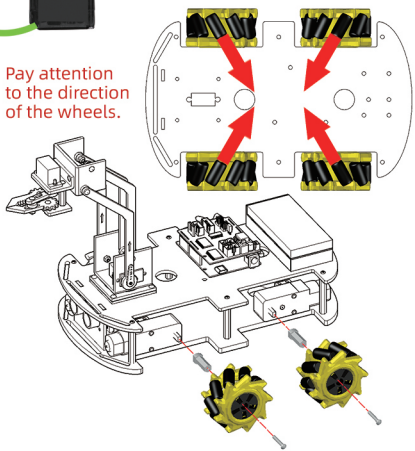

First install the coupling to the corresponding position of the motor, and then align the wheel with it, install it, lock the screw, and finally reinforce with a screwdriver.

Note: Note that the grain of the wheel is crossed left and right. See the documentation for details.

Installing a Bluetooth Module

① Bluetooth module*1pc

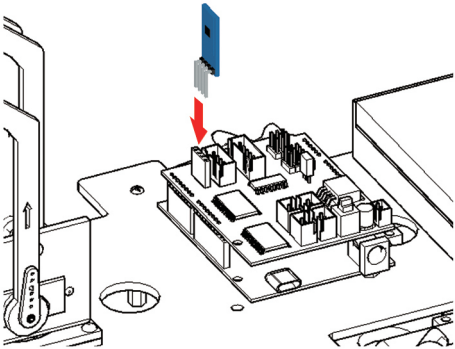

Insert the Bluetooth module into the corresponding position of the expansion board.

Note: Do not insert the Bluetooth module backwards.

The installation is complete

Here, congratulations you have completed the whole assembly of the car, then you can combine the code to explore the fun of the smart car, enjoy the joy of programming and toy combination.

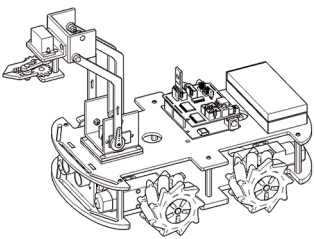

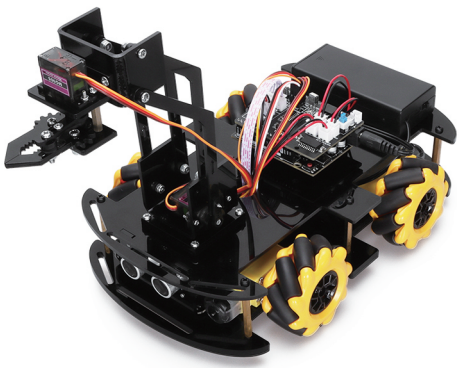

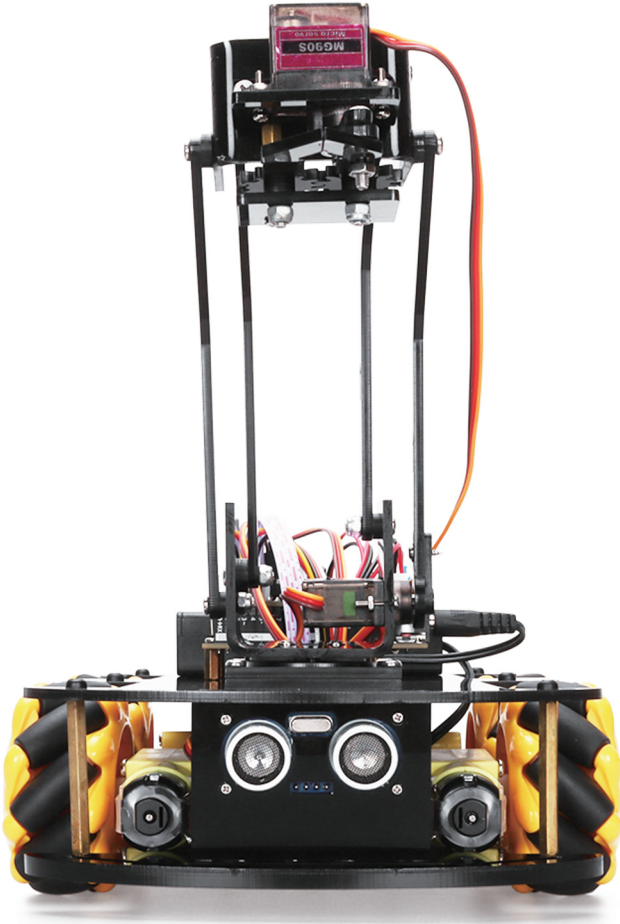
MG90S

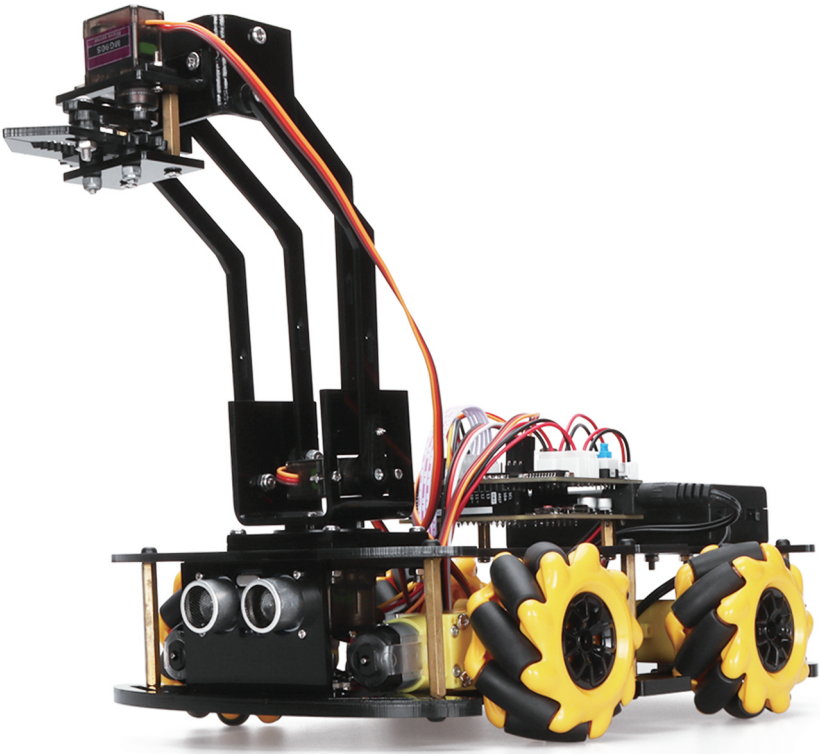

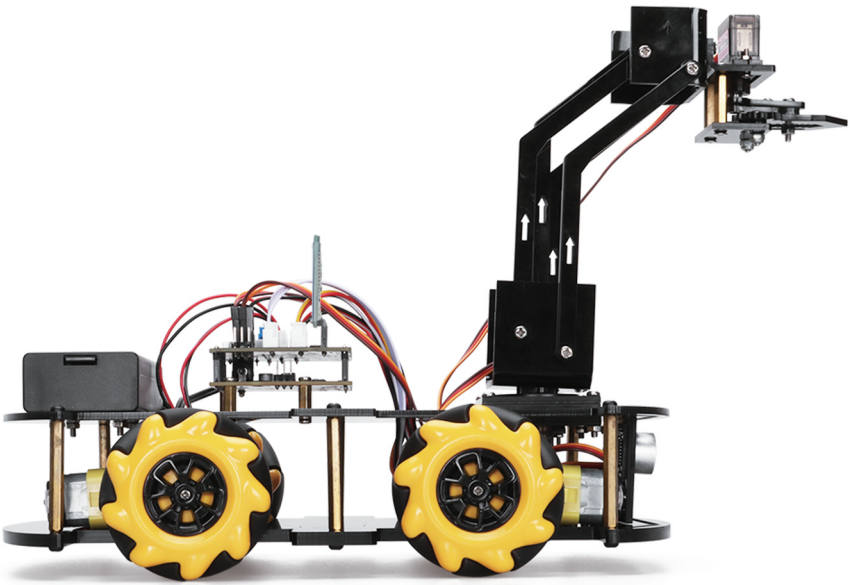

TSCINBUNY