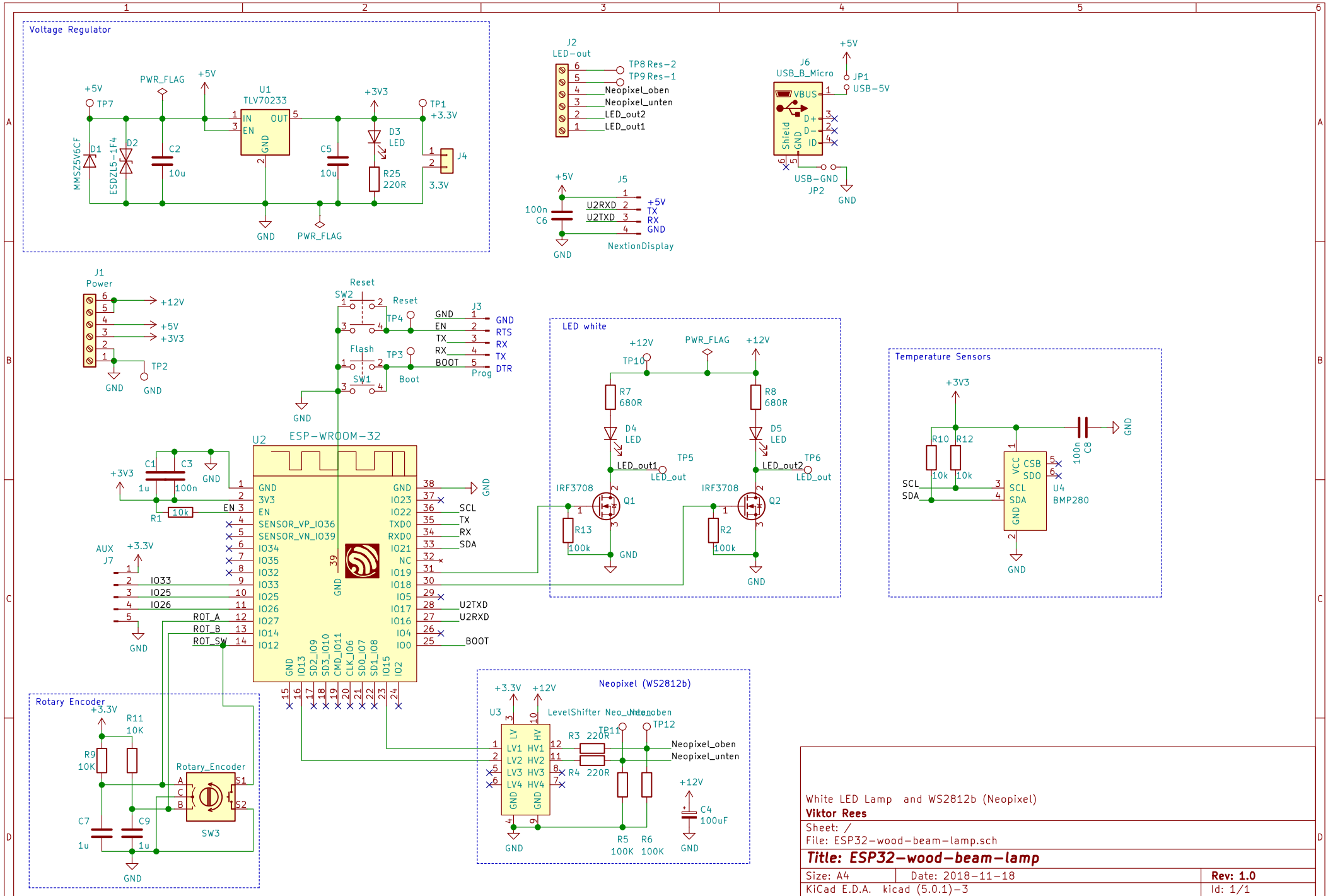
Voltage Regulator
+5V
TP7
PWR_FLAG
+5V
U1
TLV70233
IN
EN
OUT
GND
+3V3
TP1
+3.3V
D1
MMSZ5V6CF
D2
ESDZL5-1F4
C2
10u
C5
10u
D3
LED
R25
220R
J4
3.3V
GND
PWR_FLAG
J2
LED-out
TP8 Res-2
TP9 Res-1
Neopixel_oben
Neopixel_unten
LED_out2
LED_out1
J6
USB_B_Micro
VBUS
D+
D-
ID
GND
Shield
+5V
JP1
USB-5V
USB-GND
JP2
GND
+5V
J5
100n
C6
U2RXD
U2TXD
+5V
TX
RX
GND
NextionDisplay
GND
J1
Power
+12V
+5V
+3V3
TP2
GND
GND
Reset
SW2
Reset
TP4
Flash
TP3
SW1
Boot
GND
J3
GND
EN
TX
RX
BOOT
GND
RTS
RX
TX
DTR
Prog
U2
ESP-WROOM-32
+3V3
C1
1u
C3
100n
GND
R1
10k
EN
AUX
J7
+3.3V
I033
I025
I026
GND
ROT_A
ROT_B
ROT_SW
GND
3V3
SENSOR_VP_I036
SENSOR_VN_I039
I034
I035
I032
I033
I025
I026
I027
I014
I012
GND
I013
SD2_I09
SD3_I010
CMD_I011
CLK_I06
SD0_I07
SD1_I08
I015
I02
I023
I022
TXD0
RXD0
I021
NC
I019
I018
I05
I017
I016
I04
I00
SCL
TX
RX
SDA
U2TXD
U2RXD
BOOT
LED white
+12V
TP10
PWR_FLAG
+12V
R7
680R
R8
680R
D4
LED
D5
LED
LED_out1
TP5
LED_out
LED_out2
TP6
LED_out
IRF3708
Q1
IRF3708
Q2
R13
100k
R2
100k
GND
GND
Temperature Sensors
+3V3
R10
10k
R12
10k
SCL
SDA
VCC
CSB
SDO
SCL
SDA
GND
U4
BMP280
100n
C8
GND
GND
Rotary Encoder
+3.3V
R11
10K
R9
10K
Rotary_Encoder
A
C
B
S1
S2
SW3
C7
1u
C9
1u
GND
Neopixel (WS2812b)
+3.3V
+12V
U3
LevelShifter Neo_unten
Neo_oben
TP11
TP12
LV
HV
LV1
LV2
LV3
LV4
HV1
HV2
HV3
HV4
GND
GND
R3 220R
R4 220R
Neopixel_oben
Neopixel_unten
+12V
C4
100uF
GND
R5
100K
R6
100K
GND
White LED Lamp and WS2812b (Neopixel)
Viktor Rees
Sheet: /
File: ESP32-wood-beam-lamp.sch
Title: ESP32-wood-beam-lamp
Size: A4
Date: 2018-11-18
Rev: 1.0
KiCad E.D.A. kicad (5.0.1)-3
Id: 1/1