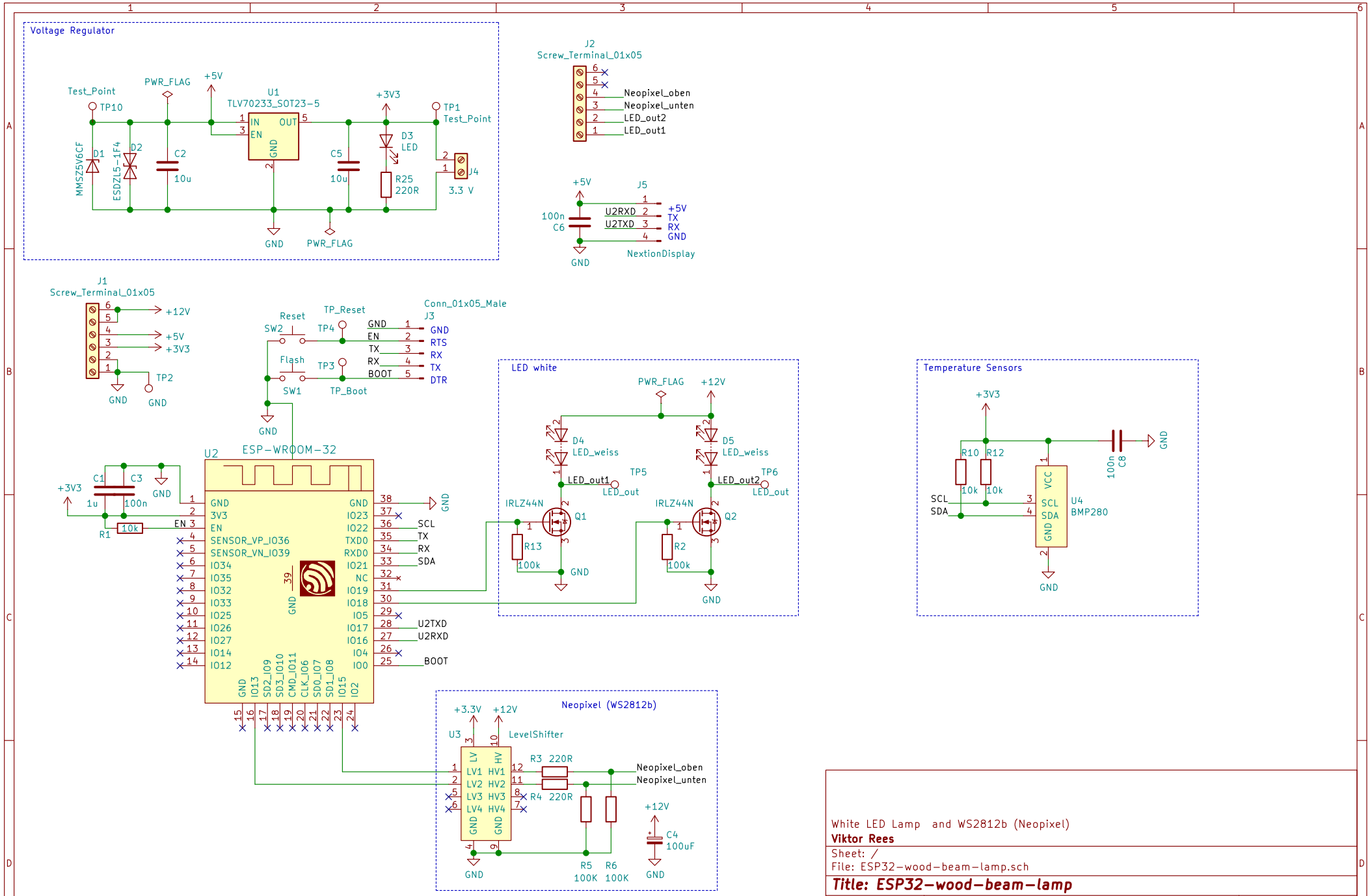

White LED Lamp and WS2812b (Neopixel)

Viktor Rees

Sheet: /

File: ESP32-wood-beam-lamp.sch

Title: ESP32-wood-beam-lamp

Size: A4	Date:	**Rev: 1.0**
KiCad E.D.A. kicad 6.0.0-rc1-unknown-eabae6866ubuntu16.04.1		Id: 1/1