Introduction to HNSW: Hierarchical Navigable Small World

ADVANCED ALGORITHM DATABASE GUIDE MACHINE LEARNING

Introduction

AI innovation is happening at breakneck speed. One of the frontiers of this innovation is the vector search engines. What are these search engines, you ask? In simple terms, they help in training large language models (LLMs) by going through large datasets and picking out what's relevant. Now, there are many different ways in which this indexing is done in vector databases. Among them, Hierarchical Navigable Small World (HNSW) stands out for being performant and scalable. All the major vector stores provide HNSW as an indexing method. It is fast, efficient, robust, and reliable. So, in this article, we will break down the inner workings of HNSW and learn what makes it so fast.

Learning Objectives

- Understand what embeddings and vector databases are.
- Get familiar with the different ways of indexing in vector databases.
- Learn what HNSW is and how it works.
- Understand HNSWlib, a header-only HNSW implementation.

This article was published as a part of the Data Science Blogathon.

Table of Contents

- Introduction
- What are Embeddings?
- What are Vector Databases?
- Indexing in Vector Databases
- What is HNSW?
- What is Skip List?
- How does Skip List Work?
- Navigable Small World (NSW)
- Hierarchical Navigable Small World (HNSW)
  - Searching in HNSW
  - Insertion and Deletion in HNSW
  - Complexities in HNSW
- Cons of HNSW
- HNSWlib: A Header-Only HNSW Implementation

- Conclusion
- Frequently Asked Questions

What are Embeddings?

Embeddings are vector representations of data (text, image) in a high-dimensional vector space.

Two semantically related data will be in proximity in the vector space, while dissimilar data will be far away. In other words, the word embeddings for Messi and football will be close together in the embedding space, while the word embeddings for football and Joe Biden will be far apart in the embedding space.

The length of vectors can range from a few hundred to thousands or more. This makes it difficult to store, query, and search. But every Retrieval Augmented Generation (RAG) based application requires high-speed search and querying of data embeddings. This is where Vector Databases come into the picture.

What are Vector Databases?

Just as traditional databases aim to store structured and unstructured data, vector databases store, search, and query high-dimensional vector embeddings. They provide user-friendly interfaces to interact with embeddings and their associated data. Vector databases are not fundamentally different from traditional databases. Vector databases use traditional databases to store serialized embeddings. For example, Chroma uses SQLite as in-memory storage, and Pgvector uses the Postgres database to store embeddings and their associated metadata. The thing that separates a traditional database from a vector database is the underlying indexing algorithm.

Indexing in Vector Databases

Indexing refers to the process of organizing high-dimensional vectors in a way that provides efficient querying of nearest-neighbor vectors.

This is the most crucial part of building any vector database. These indexes enable fast and efficient querying of high-dimensional embeddings. There are multiple indexing methods to create vector indices, such as:

- Linear search Algorithm (Flat Indexing): This is a linear search algorithm, which means it will compare the query vector with every other vector stored in the database. This is the simplest method out there and works well with small datasets.
- Cluster-based algorithm (IVF): Inverted File is a cluster-based indexing technique. It uses k-means clustering to cluster all the vectors. When a query vector is provided, it calculates the distance between the query vector and the centroids of each cluster. And starts searching for the nearest neighbors in the cluster with the centroid closest to the query vector. This significantly reduces query time.
- Quantization (Scalar and Product Quantization): The quantization technique involves reducing the memory footprint of large embeddings by reducing their precision.
- Graph-based (HNSW): The most common indexing method. It uses hierarchical graph architecture to index vectors. And this is what we are going to explore.

What is HNSW?

Large language models (LLMs) are becoming increasingly popular, and many organizations want to implement them in their product stacks. However, there is a challenge to doing this: LLMs have a limited context window. A context window is the number of tokens an AI model can ingest. For example, the GPT 3.5 turbo has a context length of 4096. This is where vector search databases shine. Instead of throwing the entire book into the context of LLM, we find the most relevant parts and feed them to the LLM to get precise outcomes.

Now, amongst all the different ways of indexing in vector databases discussed above, HNSW is the most robust and scalable. This makes it the most widely used indexing method as well. HNSW is formed by combining two algorithms: skip list and navigable small world. To understand HNSW, we need to know these algorithms. So, let's dive in.

What is Skip List?

As the name suggests, the skip list is based on the linked list data structure, or we can say it is an extension of the linked list data structure. It was invented by David Pugh in 1990 as a faster alternative to linked lists.

Why do we even need a skip list? A linked list has an O(n) search time complexity. This may not be ideal for real-world use cases where speed of execution is paramount. So, this is why we may need a more efficient linked-list algorithm.

The skip lists have an expected time complexity of O(log n). It performs much better at random access than linked lists. As it has a layered structure with multiple nodes at each layer, the worst-case space complexity is O(n log n), where n is the number of nodes at the bottom-most level.

How does Skip List Work?

A Skip list maintains a layered linked architecture where the top layer has the longest links between elements. This reduces exponentially as we move down the layers.

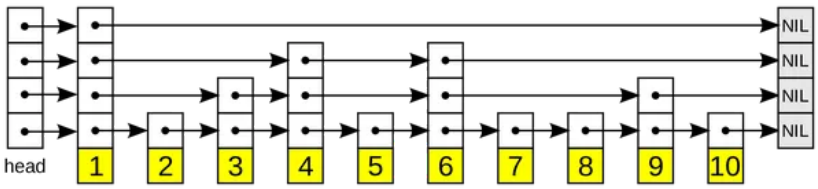

In the above picture, the bottom-most layer is a complete linked list. As we move up, the number of nodes reduces by half in each layer. The structure is called skip lists, as the higher layers let you skip nodes while traversing.

Consider the following example:

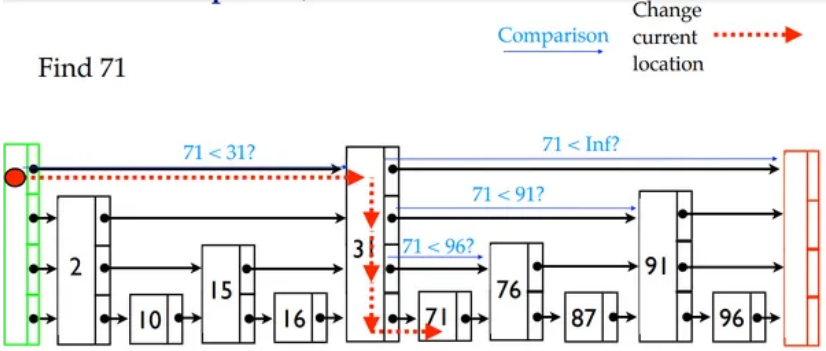

When searching for k:

- if k = target element
- if k >= move right
- if k < move down

We start from the top left corner and move right until we find k or a number less than k. We descend to the layer below and continue the process until we reach k. The search complexity is O(log n) as we skip half the items at each level.

While random access is faster, insertion and deletion are slower as they add additional overhead for updating and deleting on multiple layers.

While insertion, we start from the bottom list and add the node at the appropriate position. As skip lists maintain a hierarchical structure, we need to determine if the node appears at a higher level. The process is random, like a coin toss. The probability of a node appearing in its immediate upper layer is 0.5. In an ideal skip list, the number of nodes on layer-1 will be ~n/2, and in layer-2 ~n/4, where n is the number of nodes on the bottom-most layer or the complete linked list.

Consider the following example:

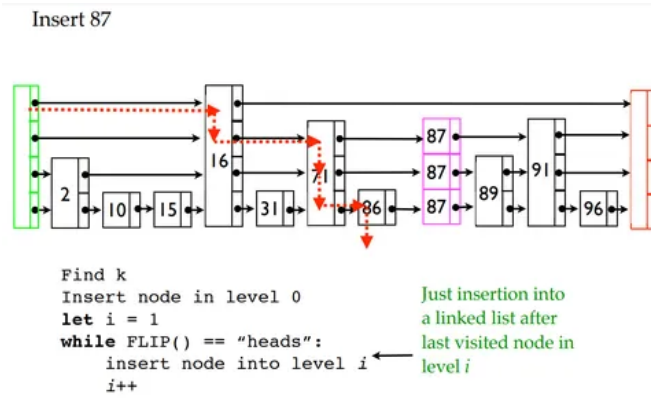

We find the ideal place for insertion and insert the node at the bottom level. We then decide if the node appears on the upper level based on a random binary outcome (heads or tail). In a perfect skip list, we get a balanced distribution of nodes in each level.

Deletion happens similarly. Find the target number and delete the node. If the element is there on a higher layer, delete it and update the linked list.

Navigable Small World (NSW)

Navigable Small World (NSW) is a graph-based algorithm designed for finding approximate nearest neighbors within a dataset. In this algorithm, the data points are represented as nodes in a graph, and each node is connected to a fixed set of nearby nodes.

Here's how NSW works:

- NSW is a greedy algorithm that starts at a predefined point in the graph and selects nodes that are closer to the target node.
- The distance between nodes is typically measured using metrics like Euclidean distance or Cosine similarity.
- The algorithm continues this process until it reaches the nearest neighbors of the target node.

NSW is known for its efficiency and ease of deployment, making it suitable for datasets ranging from a few hundred to thousands of data points. However, its performance tends to degrade with larger datasets as it relies on local information and can suffer from premature termination when it can't find a better neighbor than the current one.

One crucial aspect of NSW is insertion. When new data points are added, the algorithm traverses the graph to find their nearest neighbors and connects them to the new node.

While NSW performs well for small to moderately sized datasets, it may not scale effectively to handle datasets with hundreds of millions or billions of data points. This limitation leads to the need for more scalable algorithms like HNSW (Hierarchical Navigable Small World) to efficiently search and navigate massive datasets.

Hierarchical Navigable Small World (HNSW)

HNSW extends NSW by incorporating the hierarchical architecture of Skip Lists. This removed the scalability bottleneck of NSW. Like Skip Lists, HNSW creates the multi-layer structure of NSWs instead of linked lists. Like Skip Lists, the topmost layer will have fewer data points with the longest connections. The number of elements increases as we move down the hierarchy. At the bottom-most level, we have all the data points. Like skip lists, the probability of the existence of an element exponentially decreases as we move up in the hierarchy.

But how do we search in HNSW?

Searching in HNSW

Now recall both the skip list and NSW. In the skip list, we start at the uppermost layer, and in NSW, we start at a pre-defined point. In HNSW, we start from a pre-defined point at the uppermost layer of the hierarchy and greedily traverse the graph to find the closest element to the target data point in that layer. Once we reach the nearest node, we descend to the layer below and repeat the process until "K" nearest neighbors of the target node are found. See below picture

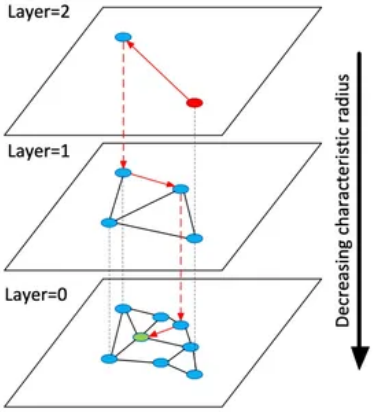

Insertion and Deletion in HNSW

Insertion in HNSW

Insertion in HNSW follows the same principle as that of Skip lists. We traverse the layers, finding the nearest neighbors of the element. Then, we move down and repeat the same process until we find all the nearest neighbors on the bottom layer.

Determining Bi-Directional Links

The next task is to determine the bi-directional links to the inserted element. It is usually determined by a predefined parameter m. We connect the m number of nearest neighbors to the inserted node. This is one of the ways to determine connections to an inserted node. Other heuristics can also be used. For instance, instead of only connecting to the nearest neighbor nodes of the same region, we also connect the inserted node to the closest node of the nearest region to form a better-connected graph.

Random Layer Assignment

As with the skip lists, the probability of a node appearing in the higher layers is decided randomly. The function for it is *floor(-ln(rand(0, 1)))*, where *rand(0, 1)* is a random number sampled from a uniform distribution between *(0, 1]*.

Deletion in HNSW

Deletion follows a similar approach. We start with the top layer and delete the target as it appears till the bottom layer.

Complexities in HNSW

The time complexities of searching, insertion, and deleting in HNSW depend on multiple factors, including the height of the architecture, the number of neighboring nodes per node, and the distance metric. But on average, searching, insertion, and deletion have O(log n) time complexity. The construction of the HNSW can be expensive. We need to insert n number of nodes with O(log n) complexity. So, the overall time complexity of graph construction will be O(n log n).

Vector databases are built to handle hundreds of millions of embeddings. Indexing such an amount of data requires a highly efficient, robust, and scalable algorithm. HNSW ticks all the boxes.

Cons of HNSW

Although the searching, insertion, and deletion are faster in HNSW, there are a few trade-offs you need to know before going with HNSW. Here are a few things to keep in mind before implementing HNSW.

- **Higher Memory footprint**: HNSW maintains a hierarchical structure of embeddings, which significantly increases memory consumption compared to algorithms like NSW. This can be problematic for resource-constraint devices.
- **Parameter Tuning**: HNSW has different tunable parameters. Careful parameter tuning is needed to improve performance.
- **Difficulty:** Implementing HNSW from scratch can get tricky. Most vector databases use trusted pre-built solutions such as FAISS or HNSWlib.

HNSWlib: A Header-Only HNSW Implementation

HNSWlib is a header-only C++ implementation of the HNSW algorithm with Python bindings. It was written by the author of the HNSW paper, Yury Malkov. This is a bare-bone implementation of the algorithm.

So, let's get into it.

You can install HNSWlib with any Python package manager.

```
pip install hnswlib
```

Declare and Initialize HNSW index.

```
import hnswlib import numpy as np import pickle dim = 16 num_elements = 100 hnsw_index = hnswlib.Index(space = 'l2', dim = dim) #declare Index hnsw_index.init_index(max_elements = num_elements, ef_construction = 200, M = 16)
```

- The space parameter is the distance metric that will be used to calculate the distance between nodes. Python implementation supports squared L2, Cosine, and dot-product.
- The dim parameter is the dimension of embedding vectors
- The init_index method initializes the index.
- ef_construction defines the construction time/accuracy trade-off.
- M is the number of bi-directional links created during the insertion of a node.

Now that we created the indexes let's add a few vectors.

```
data1 = np.float32(np.random.random((num_elements, dim))) ids1 = np.arange(num_elements) data2 = np.float32(np.random.random((100, dim))) ids2 = np.arange(100) data3 = np.float32(np.random.random((100, dim))) ids3 = np.arange(100) hnsw_index.add_items(data1, ids1) hnsw_index.add_items(data2, ids2) hnsw_index.set_ef(50) #set query time speed/accuracy trade-off hnsw_index.set_num_threads(4) #sets number of threads during batch construction
```

Now, let's see how we can query k's approximate nearest neighbor:

```
labels, distances = p.knn_query(data, k = 1)
```

Serialize the index object using pickle.

```
p_cp = pickle.loads(pickle.dumps(hnsw_index))
```

Deleting elements

```
for id in ids2: hnsw_index.mark_deleted(id)
```

This will free up the last 100 elements from the index. If you wish, you can also reuse the memory of deleted elements.

```
hnsw_index.add_items(data3, labels3, replace_deleted=True)
```

Conclusion

The HNSW is one of the most crucial algorithms right now for the development of vector retrieval methods. It is the primary indexing algorithm used in all major vector databases. Hope you've understood the workings of HNSW through this article. As AI evolves, we will see the development of larger and more complex learning models, causing a rise in the need for using HNSW and increasing its applications and importance.

Key Takeaways

- Vector databases are purpose-built data stores for storing high-dimensional vector embeddings.
- Indexing of embeddings allows vector stores to handle querying, insertion, and deletion of embeddings.
- There are different ways of indexing vectors, such as IVF, Annoy, Quantization, and HNSW.
- HNSW is a combination of two algorithms. Skip lists and a Navigable Small World (NSW).

Frequently Asked Questions

Q1. What does HNSW stand for?

Ans. HNSW stands for Hierarchical Navigable Small World. It is one of the top-performing vector indexing algorithms used across all vector databases.

Q2. What is the difference between NSW and HNSW?

A. HNSW (Hierarchical Navigable Small World) extends NSW (Navigable Small World) by constructing a hierarchical graph of the data points. The construction of the graph is such that similar data points are close together, and dissimilar data points are far apart.

Q3. What is vector search?

Ans. Vector search is a technique for finding similar items in a dataset based on their vector representations. Vector representations are numerical representations of data objects that capture their semantic and syntactic properties.

Q4. What is the approximate nearest search?

Ans. Approximate nearest neighbor (ANN) search is a type of search algorithm that finds items in a dataset that are similar to a given query item but not necessarily the exact nearest neighbors. ANN search algorithms are often used in applications where it is important to find similar items quickly, even if the results are not perfectly accurate.

Q5. What is product quantization?

Ans. Product quantization (PQ) is a technique for compressing high-dimensional vectors to make them more efficient to store and search. It works by dividing the vector into smaller subvectors and then quantizing each subvector separately. This results in a compressed vector that is much smaller than the original vector but still retains most of the original information.

The media shown in this article is not owned by Analytics Vidhya and is used at the Author's discretion.

Article Url - https://www.analyticsvidhya.com/blog/2023/10/introduction-to-hnsw-hierarchical-navigable-small-world/

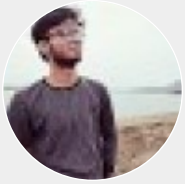

Sunil Kumar Dash