FPGA-Based Gesture-Controlled Music Conductor System

ECE 532 Final Demo

Group 8
John Nguyen, Kamal Kanel, Varun Seshadri

Project Overview

System Purpose

A real-time interactive conductor interface that translates hand gestures into digital orchestra commands. The system captures hand coordinates via camera and dynamically alters a single stream audio engine.

- Real-time Video Processing (Color Based Hand Tracking)
- Digital Audio Modulation & Filtering
- Hardware-Accelerated DSP Engines
- Integrated Video Out Control via MicroBlaze Soft Core

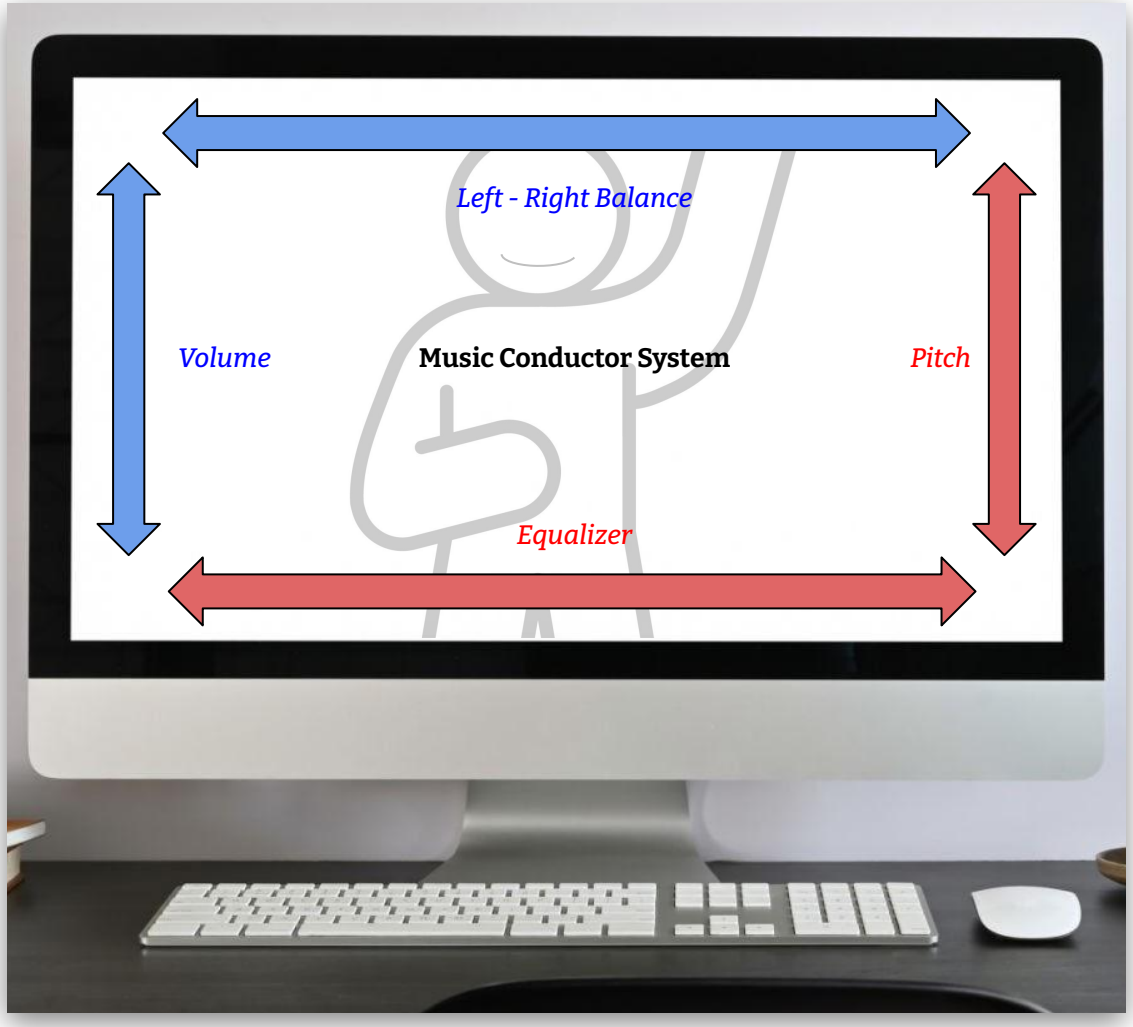

Original Proposed System

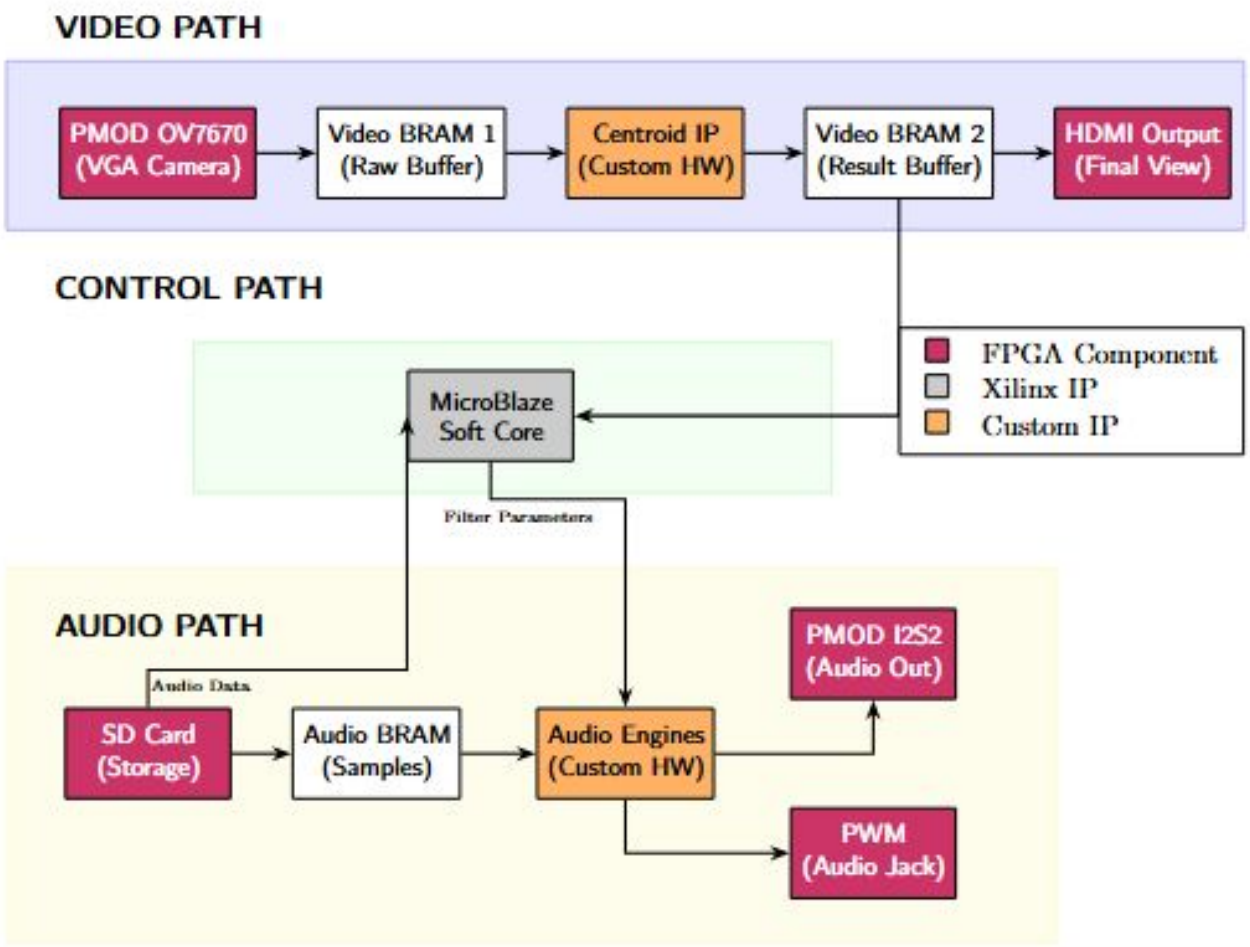

Current System

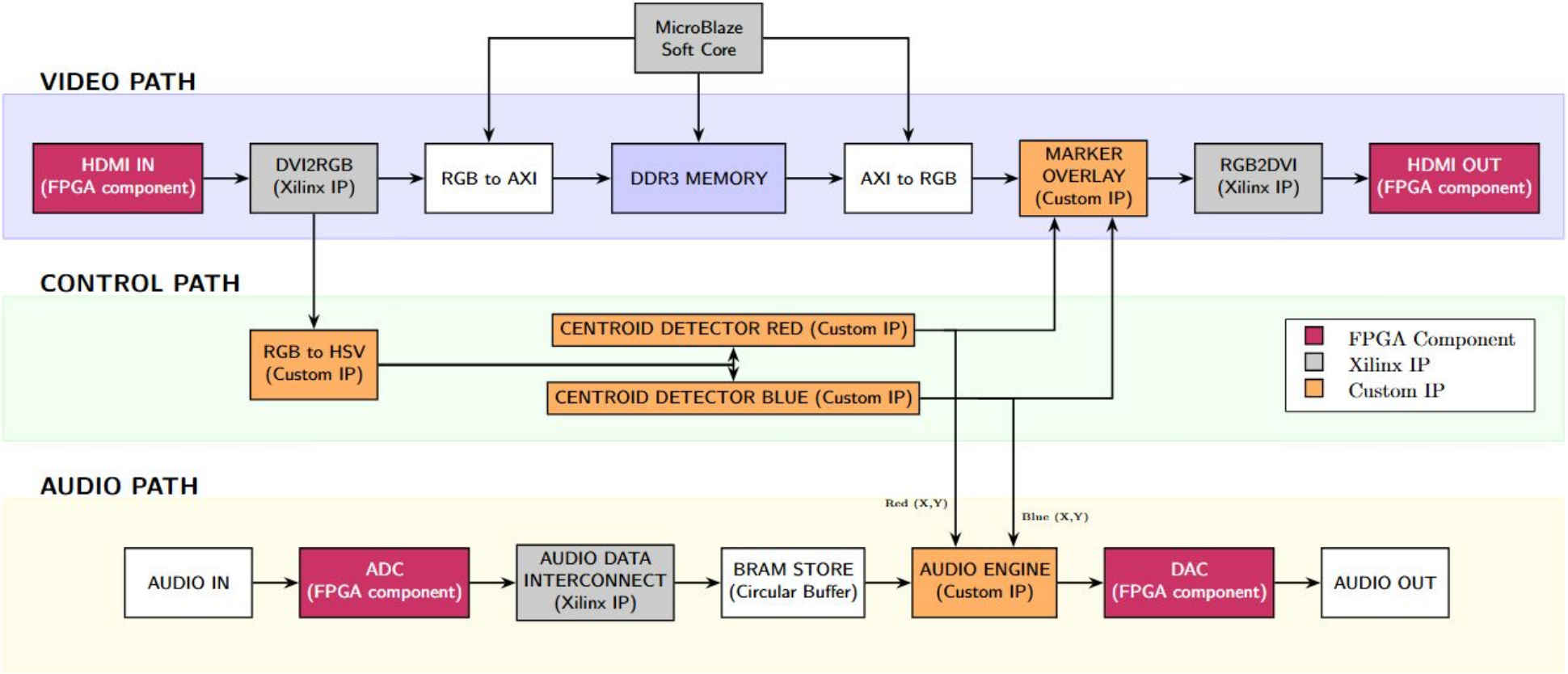

Major Component: Video Pipeline

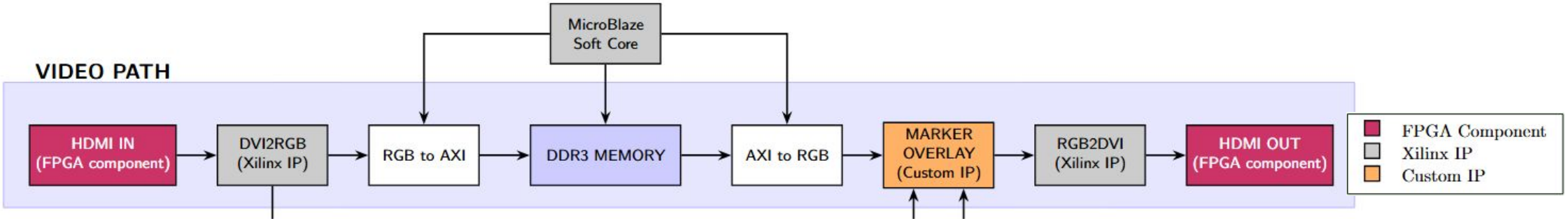

- HDMI IN gets clean camera feed from a smartphone
- DVI2RGB block converts HDMI TMDS into RGB888 video stream
- RGB-to-AXI through to AXI-to-RGB is handled by Digilent IP and Microblaze soft core logic to buffer frames and control output video resolution
- Custom Marker Overlay UI block draws crosshairs and positioning results on the outgoing RGB stream
    - Coordinates for crosshairs come from Centroid Detectors through synchronizers (CDC: HDMI IN -> HDMI OUT)
- RGB2DVI converts RGB888 back to HDMI TMDS for monitor output

Major Component: Control Pipeline

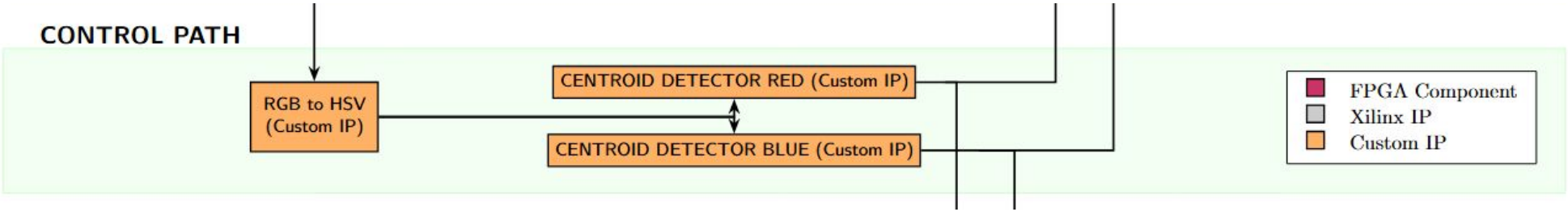

- RGB888 stream from DVI2RGB block is converted to HSV format by RGB-to-HSV block
  - HSV video format allows for simple color detection check
- HSV format video goes into Centroid Detector instances each set to detect a different color based in module parameters
- Centroid Detectors output detected coordinates normalized to 0-1023 as control signals through synchronizers for Audio Engine and UI Overlay blocks

Major Component: Audio Pipeline

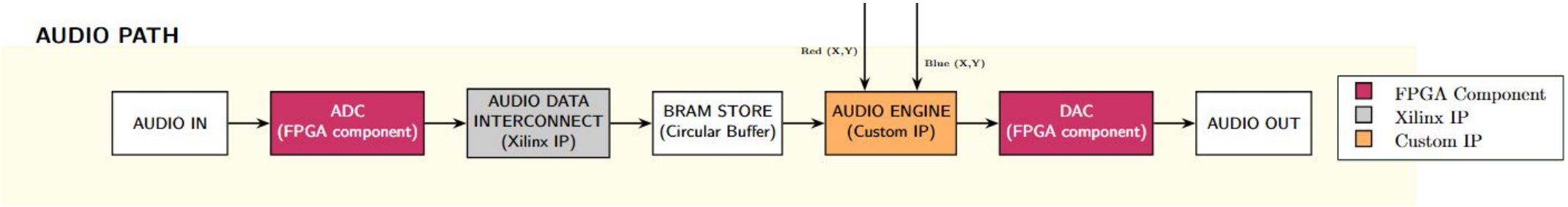

- Audio In from stereo device audio out
- Xilinx IP scales audio input to 11 bit signed signal, stored into BRAM for buffering
- Audio Engine performs Pitch, Volume and EQ adjustments while reading audio from BRAM
    - Control signals come from Centroid Detectors through synchronizers (CDC: HDMI IN -> AUDIO)
- Audio Out goes to speakers or headphones

Design Utilization

	Slice Registers	LUT as Logic	LUT as Memory	Block RAM Tile	DSPs
TOTAL	37,919 (14%)	26,406 (22%)	3,870 (8%)	148 (41%)	205 (28%)
Xilinx	28,687	20,346	1,901	43	9
Digilent	1218	991	24	0	0
Custom	8014	5078	1945	105	196
Audio Engine	6924	3487	1152	96	182
Centroid (Red)	372	278	369	0	2
Centroid (Blue)	371	277	369	0	2
Marker/UI Overlay	201	891	27	8	8
RGB-to-HSV	89	94	13	1	2

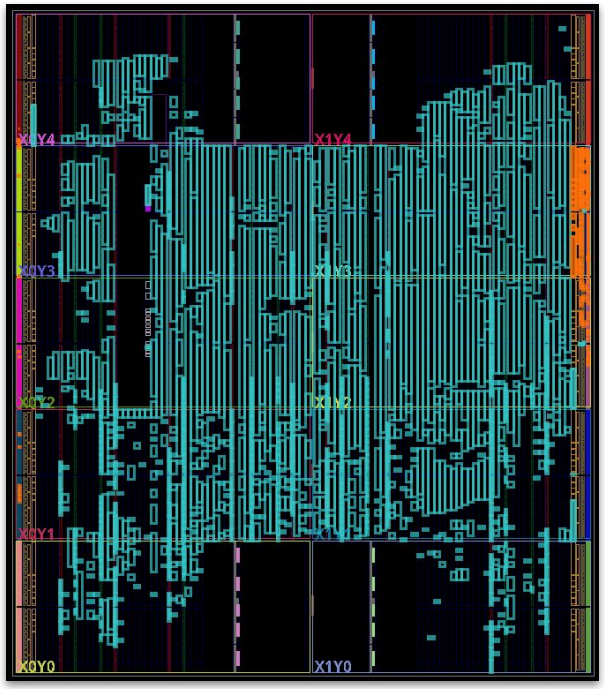

Final Computed Difficulty Score

Component	Complexity
HDMI Input	1.0 pts
HDMI Output	1.0 pts
On-board Audio Input port	0.75 pts
On-board Audio Output port	0.5 pts
Custom Hardware/IP design (4)	1.5 pts
Meaningful Visualization of program with GUI	0.5 pts
Total	*~5.25 pts*

Future Work

Complexity

Use SD card to store/buffer the audio instead of Line-in

Image Tracking

Convolution filter for object detection.

Additional Features

Adjust audio Tempo, add more color trackers & audio channels simultaneously.

DEMO TIME :)

The Design is Very Human