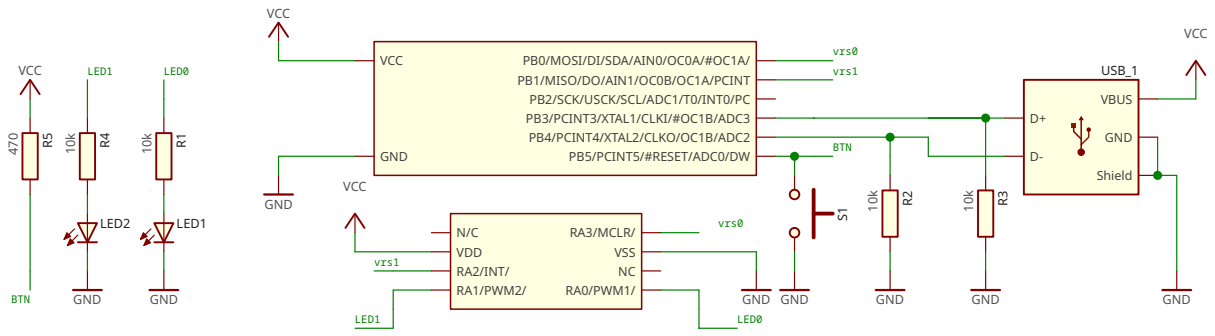

Made With
LibrePCB

Main		2023-06-26
		Stanchev
AVRPICBoard	v1	Page 1 of 1