VERSATILIS 680CMY
(SPL-LED-680CMY)

Version 1.0

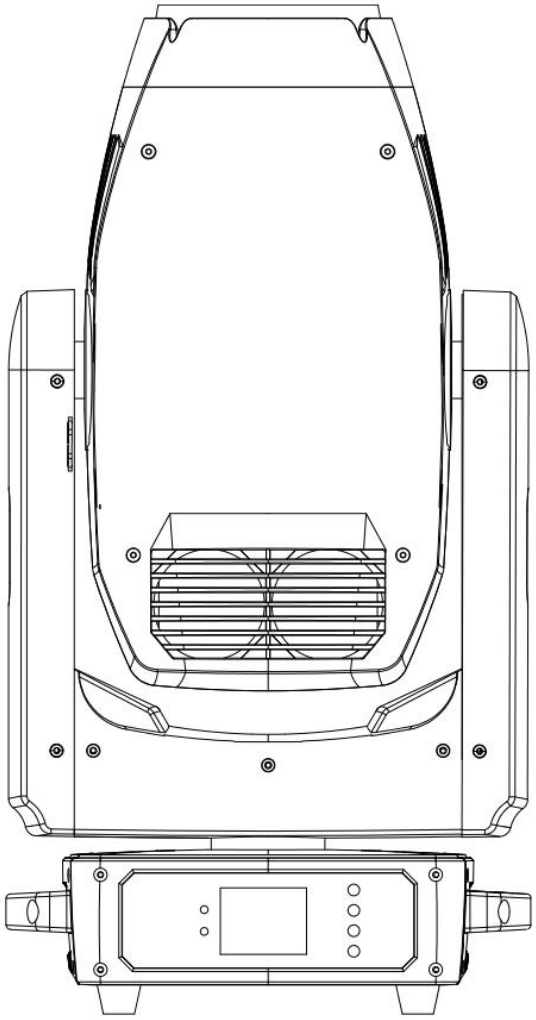

USER MANUAL

- Be sure to read the USER MANUAL carefully before using this product.
- Be sure to keep the USER MANUAL properly for future needs.
- Use this product correctly when you can fully understand the User Manual.

CONTENT

1. SAFETY INSTRUCTIONS ..... - 1 -

IMPORTANT: ..... - 1 -

2. UNPACKING ..... - 3 -

3. TECHNICAL SPECIFICATION ..... - 4 -

ELECTRICAL ..... - 4 -

4. PHOTOMETRIC DIAGRAM ..... - 5 -

5. OPERATION INSTRUCTIONS ..... - 5 -

6. INSTALLATION ..... - 6 -

INSTALLATION DIAGRAM: ..... - 6 -

PROCEDURES: ..... - 6 -

7. DMX CONNECTION ..... - 7 -

8. RDM OPERATION GUIDANCE ..... - 8 -

9. DISPLAY AND OPERATION ..... - 8 -

DISPLAY： ..... - 8 -

SYSTEM MENU DESCRIPTION: ..... - 8 -

SYSTEM SUB-MENU DESCRIPTION: ..... - 9 -

10. DMX CHART ..... - 10 -

24 -CHANNEL MODE: ..... - 10 -

11. CLEANING AND MAINTENANCE ..... - 13 -

12. TROUBLESHOOTING GUIDE ..... - 13 -

1. SAFETY INSTRUCTIONS

Thanks for choosing our VERSATILIS 680CMY (SPL-LED-680CMY), for your safety and product longevity please read the user manual carefully **BEFORE YOUR INITIAL START-UP!**

CAUTION!

Be careful with your operations.

With a high voltage equipment you can suffer a dangerous electric shock when touching the wires!

This product has left our warehouse in absolutely perfect conditions. In order to maintain this condition and to ensure a safety operation, it is absolutely necessary for the user to follow the safety instruction and warning notes written this manual.Our company reserves the right to interpret the matters outlined in this manual.

IMPORTANT:

- If you sell the unit to another user, be sure that they also receive this instruction manual.
- Important: The manufacturer and its dealers will not accept liability for any resulting for any resulting damages caused by the non-observance of this manual or any unauthorized modification to the device.
- Unpack and check carefully to ensure that there is no transportation damage before using the unit.
- Check the IP level of our products. IP20 products is not suitable for wet locations.Keep this device away from rain and moisture!IP 65 products are allowed to use in wet conditions, but DO NOT immerse in water! When not in use, keep the fixtures in a dry and clean place.
- DO install and operate by qualified operator.
- DO NOT allow children to operate the fixture.
- Use safety chain (made of steel, min. diameter 4.0mm) when fixing the unit.
- Handle the unit by carrying its base instead of head only.
- The unit must be installed in a location with adequate ventilation, at least 50cm from adjacent surfaces.
- Be sure that no ventilation slots is blocked, otherwise the unit will be overheated.
- Before operation, ensure that you are connecting this product to the proper voltage in accordance with the specifications in this manual or on the product's specification label.
- It's important to ground the fixture to earth in order to avoid electric shock.
- Minimum ambient temperature: -10℃. Maximum ambient temperature: 40℃. Do not operate this product at a lower or higher temperature.
- During the operation the housing becomes hot.Unit's surface temperature may reach up to 70℃. Allow the fixture to cool approximately 20 minutes prior to manipulate with it. DO NOT touch the housing bare-handed during its operation.
- DO NOT connect the device to any dimmer pack.
- Keep flammable materials away from the fixture while operating to avoid fire hazard.
- Make sure the power cord is not crimped or damaged; replace it immediately if damaged.
- Avoid any flammable liquids, water or metal from entering the unit. Once it happens, cut off the mains power immediately.
- Warning! Always disconnect power input cable to completely remove power from unit when not in use or before cleaning or servicing the fixture.
- DO NOT operate in a dirty or dusty environment.
- DO clean the fixture regularly.
- DO NOT touch any wire during operation as there might be a hazard of electric shock.
- Only handle the power cable by the plug. Never pull out the plug by tugging the power cable.
- Avoid entanglement of the power cord with other wires.
- The minimum distance to objects/surface must be more than 4 meters.
- In the event of serious operating problem, stop using the unit immediately.

- Never turn on and off the unit time after time.
- The housing, the lenses, or the ultraviolet filter must be replaced if they are visibly damaged.
- DO NOT open the housing as there are no user serviceable parts inside.
- DO NOT attempt to operate this unit if it becomes damaged.
- DO NOT attempt any repairs yourself. Repairs carried out by unskilled people can lead to damage or malfunction. Please contact the nearest authorized technical assistance center if needed.
- When you need to change the lamps and fuses, always use same type and rating only.
- DO use the original packaging if the device is to be transported.
- Check that the head tilt lock is released before packing for transportation.
- Avoid direct eye exposure to the light source while the product is on.
- DO NOT operate this product if you see damage on the housing, shields, or cables. Have the damaged parts replaced by an authorized technician at once.
- For all moving head lights, external sources of light beams from direct sunlight or any other strong light source, which penetrate the front lens of lighting fixtures, can cause severe internal damage.
- DO NOT expose the fixture front lens to light beams from direct sunlight or any other strong light source from any angle while unpacking, installation, use, and extended idle times outdoors. DO NOT focus a light beam from one lighting fixture directly towards another.

2. UNPACKING

The VERSATILIS 680CMY(SPL-LED-680CMY) is a hybrid moving head for wash, spot, beam with CMY function, designed for indoor use only. When you receive the fixture, please carefully unpack it and check whether the following items are included inside of the box(In case of any damage or missing items please contact your dealer or manufacturer):

- VERSATILIS 680CMY(SPL-LED-680CMY)* 1
- POWER CABLE * 1
- DMX CABLE * 1
- USER MANUAL * 1

3. TECHNICAL SPECIFICATION

ELECTRICAL

- Input power: AC100-240V
- Power frequency: 50/60Hz
- Power: 600W
- Fuse:10A

LIGHT SOURCE

- Source:500W LED
- Average lifespan: 50000 hours

COLOR SYSTEM

- Color：9 colors+open+CTO+CTB+CMY

ELECTRONICS

- Linear dimming: 0-100% Linear Dimmer
- Strobe: 1-25Hz

OPTICS

- Beam Angle:4.9°-33.9°

DYNAMIC EFFECTS

- Rotatable gobo wheel: 7 replaceable gobos +open
- Static gobo wheel: 11 gobos + open
- Prism 1: 8-facet rotatable prism
- Prism 2: 3-facet rotatable prism

CONTROL

- DMX channels: 24CH
- DMX connector:5-Pin XLR input/output
- With RDM function and software upload via DMX cable
- Power connector: Tru1 input
- Control mode: DMX/Master-Slave/Auto/RDM
- Pan: 540º, 16 bits scanning
- Tilt: 270º,16 bits scanning
- LCD touch display with 4 buttons

PHYSICAL

- IP RatingIP20
- Housing color: black
- Working ambient temp:-10℃ to 40℃ (-14℉ to 104℉)
- Dimensions: 360*252*711mm/14 *9.9*27.8in
- Weight:23kg/50.71lb

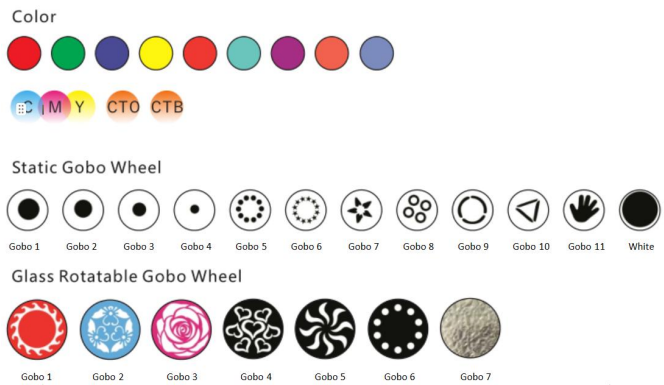

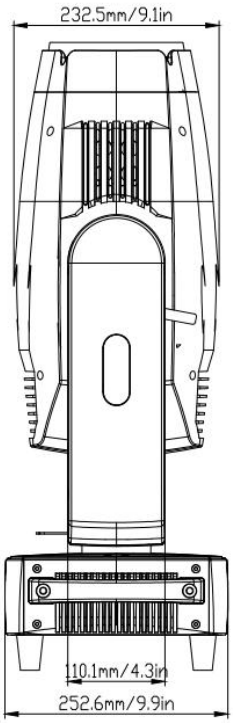

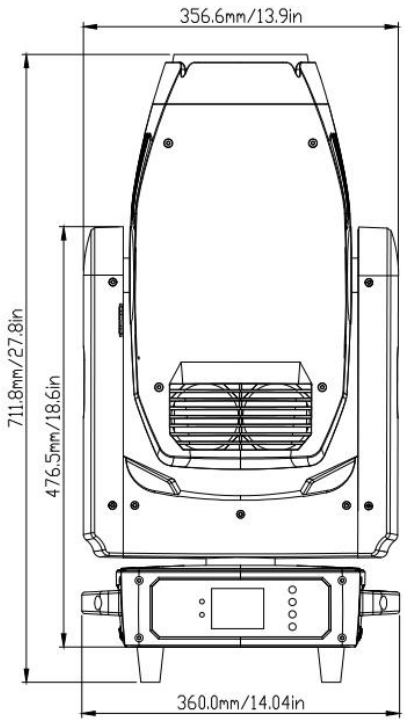

4. PHOTOMETRIC DIAGRAM

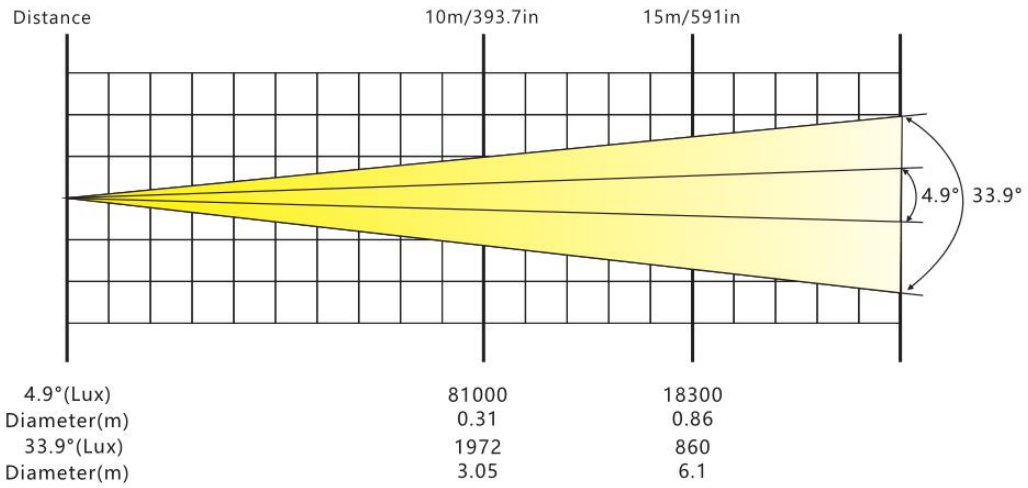

5. OPERATION INSTRUCTIONS

- The VERSATILIS 680CMY(SPL-LED-680CMY) is a hybrid moving head serving for spot, wash and beam functions.
- Please inspect the product before installation. If you notice any defects, contact the dealer or manufacturer immediately.
- Read this user manual before installation, follow safety and operation instruction in it.
- Allow the fixture to acclimate to room temperature before turning it on, especially after transportation or exposure to significant temperature changes. Operating the light immediately could cause damage due to the sudden environmental shift.
- This light should be protected from shock, strong vibrations or shaking during transportation, movement and installations.
- Do not lift the light by the head alone, as this may cause damage to the mechanical parts.
- Do not expose the fixture to excessive moisture, or dusty environments during installation. Avoid laying power cables on the floor to prevent potential electric shock.
- The applicable temperature for the fixture is between -10℃ to 40℃ (-14℉ to 104℉).
- Please ensure that the environment is in good and safe condition for proper installation and usage.
- Ensure the fixture is operated by qualified personnel who are familiar with its use.
- Keep the original packaging in case a second shipment is needed.
- Please avoid opening or attempting to repair the fixtures without the manufacturer's instructions or guidance from its authorized repair agencies.
- Warranty coverage does not apply to malfunctions resulting from improper use, such as failing to follow the user manual, or engaging in unauthorized operations, including electrical short circuits, electric shocks, or broken lamps. Please refer to our warranty policies for more details.
- Be careful with fire, heat, and electric and fall-off that make heavy fatal injury.
- It is recommended to turn off the fixtures if they have been in use for more than 8 hours.

6. INSTALLATION

- This fixture is not suitable for direct installation on flammable surfaces. Please ensure that the fixture is kept at least 0.5 meters away from any materials that can catch fire.
- Use the safety cable correctly to ensure security by always threading it through the fast-lock holes and locking the fast-lock properly.
- The fixture operates within a temperature range of -10℃ to 40℃ (-14℉ to 104℉). Avoid using the lighting outside this temperature range.
- The truss used for hanging the fixture should be capable of supporting at least 10 times the weight of the fixture without any deformation after one hour.
- Do not stand under the fixture during installation, uninstallation, movement, or repair.
- Ensure the light is connected properly, and have a professional technician verify the electrical data before installation.
- Have a professional technician inspect the fixture and its installation annually.

INSTALLATION DIAGRAM:

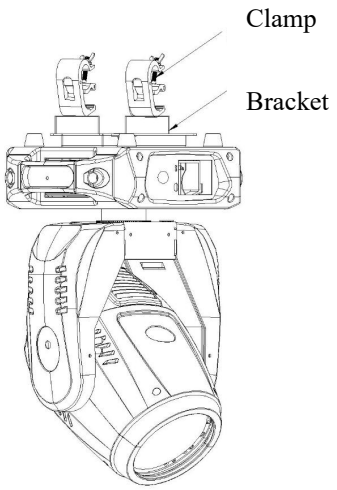

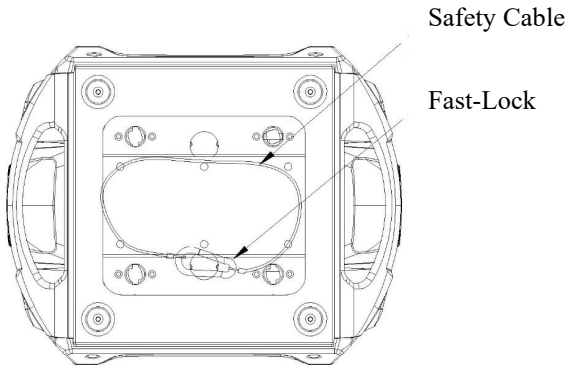

PROCEDURES:

- Carefully hold the fixture upside down by its base, unfold the two integrated clamps at the bottom, and rotate one of the clamps to the desired direction.
- Hang the clamps onto the truss and tighten the screw.
- Thread a safety cable through the hole in the base, secure it to the truss, and properly lock the fast-lock mechanism.
- Notice: Always use and install a safety cable to prevent accidental damage and/or in case of clamp failure.

7. DMX CONNECTION

Connect one end of the provided DMX cable to the 3-Pin XLR output of your console, and the other end to the 3-Pin XLR input of the first light fixture. Then, use another DMX cable to connect the DMX output of the first fixture to the DMX input of the second fixture, continuing this process until all fixtures are connected. It is recommended to use a DMX terminator at the output of the last fixture if it exceeds more than 10 fixtures in a line.

Please refer to the diagram below:

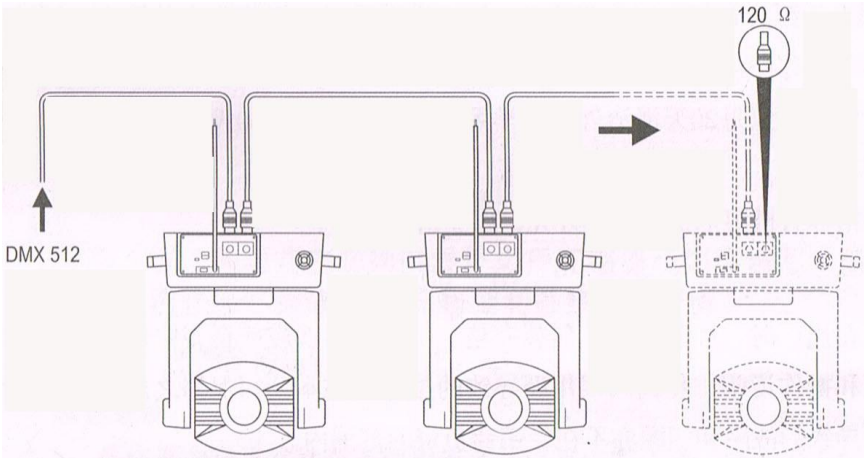

This product may come in 3-Pin or5-Pins, so please check the pins on the DMX input and output. If the DMX cable does not match with them, you will need a 3-Pin to5-Pin converter to connect them.

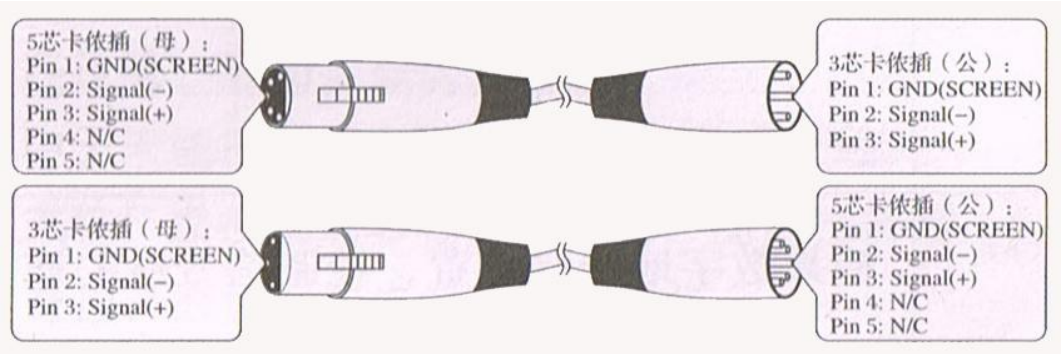

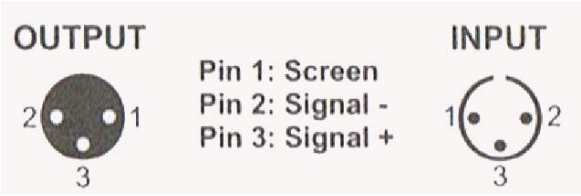

8. RDM OPERATION GUIDANCE

RDM (Remote Device Management) is an extended version of the DMX512-A protocol that enables bidirectional communication, unlike the traditional one-way DMX512 protocol. Since RDM operates on an RS-485 bus, which is a time-sharing, multi-point, half-duplex protocol allowing only one device to output to the host at a time, it's important to follow these guidelines when using RDM:

- **Use RDM-Compatible Equipment**: Ensure that both the controller and the fixtures support the RDM protocol.
- **Bidirectional Signal Amplifier Required**: A traditional one-way signal amplifier is not suitable for RDM, as it requires feedback data. Using a one-way amplifier will block the return data, preventing the fixtures from being detected.
- **DMX Mode Setup**: Set all fixtures to DMX mode and ensure there is only one master fixture on the entire DMX line.
- **Impedance Matching Resistor**: Insert a 120-ohm resistor between terminals 2 and 3 of the terminal plug to reduce signal reflection, especially for long signal lines, which stabilizes the differential signal and improves communication quality.
- **Troubleshooting Non-Detectable Fixtures**: If a fixture accepts DMX control but cannot be detected by RDM, first check the signal amplifier, and then inspect lines 2 and 3 of the signal cable for poor connections.

9. DISPLAY AND OPERATION

DISPLAY:

DMX	DMX signal status indicator
ERR	Fixture error indicator
UP	Select the previous item or increase the value.
DOWN	Select the next item or decrease the value.
MENU	Display all the functions;exit or return to the previous menu.
ENTER	Confirm, save, or execute commands.
Time(Left)	System total runtime (can be hidden under Standard Settings)
Time (Right)	Current power-on duration (can be hidden under Standard Settings)
Dot (Upper Right Corner)	Green: No errors, fixture operating normally
	Red: Error(click the icon or go to <info/error list/view>to identify the issue.

SYSTEM MENU DESCRIPTION:

Reverse	Invert the screen display
Exit	Exit to the main interface

Language	Select Simplified Chinese or English
Standard	Set address code and common functions
Advanced	Adjust factory debugging parameters
Info	Display errors, software versions, and information
Program	Manually control operations or edit user programs
Perform	Run built-in programs under auto or sound mode
Reset	System reset to initial position

SYSTEM SUB-MENU DESCRIPTION:

Standard	Default set	Enter?	Restore factory default parameters
	Address	001-512	Set fixture address code
	DMX mode	Mode1 Mode2	Select DMX control mode
	Effect mode	No/Yes	The effect wheels (color wheel and gobo wheel) will automatically find the shortest path to return to “Open” position.
	Started lamp	Off/on	Choose light "ON" or "OFF" at startup
	Switch lamp	Off/on	Manually turn on the light
	No signal	Clear Hold	Retain or clear DMX values when without signal
	UI Color	Green Blue Golden Gray	Select menu color
	Show time	No/Yes	Show runtime on main interface
	Brightness	000-255	Adjust screen brightness
	Screensaver	Off/on	Turn off screen when inactive
	XY encoder	No/Yes	Enable/disable XY auto-correction
	X inversion	No/Yes	Invert X-axis rotation
	Y inversion	No/Yes	Invert Y-axis rotation
	Focus inversion	No/Yes	Invert focus
	Zoom inversion	No/Yes	Invert zoom
Advanced	DO NOT change without authorization!It may damage your fixture. Code:FFFF		
Info	Error List	No error/View	If there is no error or an error, click OK to view the error
	System ver	Vxxxxxxx	System version information
	Serial NO.	xxxxxxxx	Fixture serial number
	SYS timer	00000.0H	System total runtime (hours)
	Run timer	000:00	Runtime since power-on (hours)
	Lamp timer	00000.0H	Light runtime (hours)
	Equip TEMP	000	Main part temperature (Function only if the fixture is equipped with this feature.)
	Head TEMP	000	Fixture head temperature (Function only if the fixture is equipped with this feature.)
perform	Run mode	Auto/Sound	Run selected program under auto or sound mode
	Run speed	255	Set auto mode speed
	Run cross	255	Set step amplitude for auto or sound mode (Function only if the fixture is equipped with this

			feature.)
	Built-in 1	Off/on	Device Built-in Test Procedures 1
	Built-in 2	Off/on	Device Built-in Test Procedures 2
	User PRO 1	Off/on	User-programmed program 1
	User PRO 2	Off/on	User-programmed program 2
	User PRO 3	Off/on	User-programmed program 3
	User PRO 4	Off/on	User-programmed program 4
	Circle shape	Off/on	(Reserve)
	Square shape	Off/on	(Reserve)
	Shape range	000	(Reserve)
	Sound DB	000	Adjust sound control sensitivity
Program			
Reset	System reset to initial position		

10. DMX CHART

24 -CHANNEL MODE:

24CH	Function	Value	Description
CH1	Pan	0-255	0-540°
CH2	Pan Fine	0-255	0-2°
CH3	Tilt	0-255	0-270°
CH4	Tilt Fine	0-255	0-1°
CH5	Pan/Tilt Speed	0-255	Speed fast to slow
CH6	Dimming	0-255	0-100% dimming
CH7	Strobe	0-4	Shutter closed (Light off)
		5-127	Strobe from slow to fast
		128	Shutter closed (Light off)
		129-131	open
		132	closed
		133-251	Random strobe from slow to fast
		252-255	Shutter open
CH8	Color	0-4	White
		5-9	Red 1
		10-14	Green 2
		15-19	Blue 3
		20-24	Yellow 4
		25-29	Orange red 5
		30-34	Blue green 6
		35-39	Rose 7
		40-44	Orange 8
		45-49	Light blue purple 9
		50-54	CTO 10
		55-59	CTB11
		60-64	White + Red
		65-69	Red+ Green

		70-74	Green + Blue
		75-79	Blue + Yellow
		80-84	Yellow + Orange Red
		85-89	Orange Red + Blue green
		90-94	Blue green+ Rose
		95-99	Rose+ Orange
		100-104	Orange+ Light blue purple
		105-109	Light blue purple+ CTO
		110-114	CTO+CTB
		115-119	CTB+White
		120-185	Rotation forward from fast to slow
		186-189	Stop
		190-255	Rotation backward from slow to fast
CH9	Cyan	0-255	CMY cyan
CH10	Magenta	0-255	CMY magenta
CH11	Yellow	0-255	CMY yellow
CH12	Static Gobo	0-5	Gobo 1
		6-11	Gobo 2
		12-17	Gobo 3
		18-23	Gobo 4
		24-29	Gobo 5
		30-35	Gobo 6
		36-41	Gobo 7
		42-47	Gobo 8
		48-53	Gobo 9
		54-59	Gobo 10
		60-65	Gobo 11
		66-71	Open
		72-77	Gobo 1 shake from slow to fast
		78-83	Gobo 2 shake from slow to fast
		84-89	Gobo 3 shake from slow to fast
		90-95	Gobo 4 shake from slow to fast
		96-101	Gobo 5 shake from slow to fast
		102-107	Gobo 6 shake from slow to fast
		108-113	Gobo 7 shake from slow to fast
		114-119	Gobo 8 shake from slow to fast
		120-125	Gobo 9 shake from slow to fast
		126-131	Gobo 10 shake from slow to fast
		132-136	Gobo 11 shake from slow to fast
		137-190	Rotation backward from fast to slow
		191-192	Stop
		193-255	Rotation forward from slow to fast
CH13	Rotatable Gobo	0-4	Open
		5-9	Gobo 1
		10-14	Gobo 2
		15-19	Gobo 3

		20-24	Gobo 4
		25-29	Gobo 5
		30-34	Gobo 6
		35-39	Gobo 7
		40-54/55-69	Gobo 1 shake from slow to fast
		70-84	Gobo 2 shake from slow to fast
		85-99	Gobo 3 shake from slow to fast
		100-114	Gobo 4 shake from slow to fast
		115-129	Gobo 5 shake from slow to fast
		130-144	Gobo 6 shake from slow to fast
		145-159	Gobo 7 shake from slow to fast
		160-207	Rotation forward from fast to slow
		208-255	Rotation backward from slow to fast
CH14	Glass Gobo Rotation	0-127	0-360°
		128-192	Rotation backward from fast to slow
		193-255	Rotation forward from slow to fast
CH15	Prism 1	0-127	No function
		128-255	Prism 1
CH16	Prism 1 Rotation	0-127	0-400°
		128-187	Rotation forward from fast to slow
		188-195	Stop
		196-255	Rotation backward from slow to fast
CH17	Prism 2	0-127	No function
		128-255	Prism 2
CH18	Prism 2 Rotation	0-127	0-400°
		128-187	Rotation forward from fast to slow
		188-195	Stop
		196-255	Rotation backward from slow to fast
CH19	Frost	0-127	No function
		128-255	Frost
CH20	Zoom	0-150	No Function
		150-255	Narrow to wide
CH21	Focus	0-255	Far - near
CH22	Focus Fine	0-255	Fine focus
CH23	Auto	0-49	No effect
		50-99	Pan auto
		100-149	Tilt auto
		150-199	Pan/Tilt auto
		200-255	Sound control
CH24	Reset	0-209	No effect
		210-215	Pan/Tilt reset after 6s
		220-235	Effect motor reset after 6s
		240-255	All reset after 6s

11. CLEANING AND MAINTENANCE

If the lens of the fixture is damaged or broken, it should be replaced with a new lens. If the bulb is damaged or shows any form of deformation that causes the light to dim, it indicates that the bulb has reached the end of its lifespan and should be replaced promptly. The fixture contains three thermal protection devices that are designed to cut off power to the fixture in the event of overheating. If a thermal protection device is activated, the fan should be checked to ensure it is functioning properly.

It is essential to keep the fixture clean and prevent the buildup of dust, dirt, and smoke-fluid residues on or within the fixture. Failure to do so will significantly reduce the fixture's light output. Regular cleaning of the internal and external optical lenses and mirrors will not only ensure maximum light output but also allow the fixture to function reliably throughout its lifespan.The frequency of cleaning depends on the operating frequency of the fixture and the surrounding environment. It is recommended to clean the external optical system once every 20 days and the internal optical system at least once every 60 days.

Optics: Gently wipe the optical components using a soft, odorless cotton cloth. Use water or a specialized glass cleaner to remove dust and fog, then carefully dry the parts.

Air Duct: Use a soft brush, tissue paper, or compressed air to remove dust from the fan and air inlet. Ensure the fan and air vents are free of dust to maintain proper airflow.

Exterior: Do not use organic solvents such as alcohol to wipe the fixture's exterior, as this could cause damage.

12. TROUBLESHOOTING GUIDE

Troubles	Possible Solutions
The light bulb does not light up.	Verify that the voltage matches the fixture's requirements. Check for loose connections at the power supply or control switch. Ensure that the power supply is adequate. Confirm that the DMX512 controller is sending signals.
After the light is reset normally, it does not accept control from the DMX controller.	Verify that the digital start address and function options are correct. Check the communication line connections and ensure they are not too long or interrupted. Inspect the control equipment and signal amplifiers for malfunctions. Shorten control signal lines and separate high and low voltage wires. Use high-quality shielded twisted pairs for signal lines. Add a signal amplifier if needed and install a 120-ohm termination resistor at the end of the line.
The light cannot be activated.	Check that the power supply parameters match the fixture. Inspect for internal damage from transport, such as loose connections or component failures. Check for loose or disconnected internal wires and connectors. Examine electronic components (e.g., transformers, PCB boards, motor control boards) for looseness, short circuits, or burnouts.
During operation, the X-axis or Y-axis of the lighting fixture does not operate normally.	Follow the previous troubleshooting steps. Check if the belts for the X and Y axes are detached or broken. Inspect the data feedback receivers (optocouplers) for damage. Restart and reset the fixture.

Note: All repairs and maintenance should be carried out by qualified professionals.