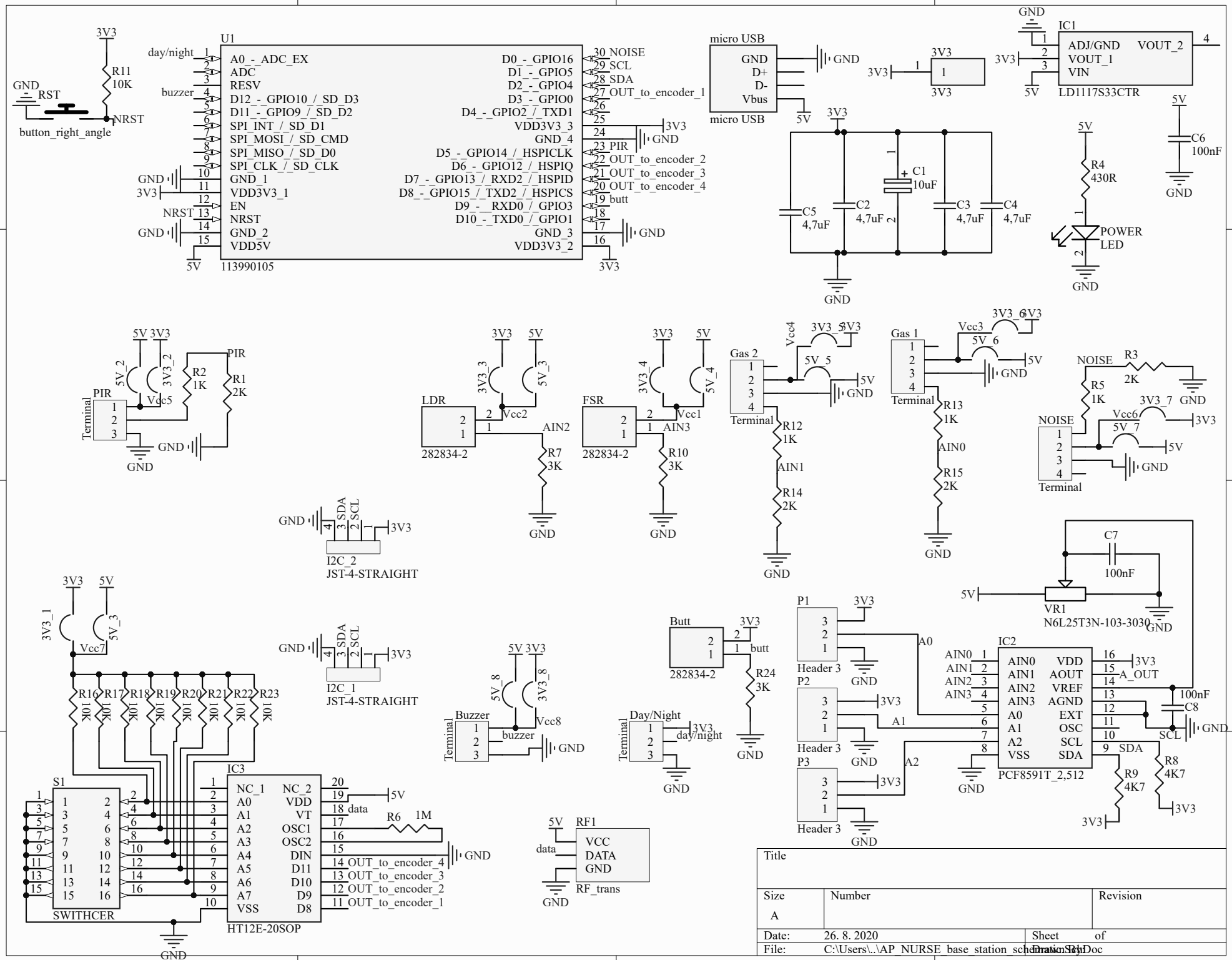
U1
113990105
A0 _ ADC_EX
ADC
RESV
D12 _ GPIO10 / SD_D3
D11 _ GPIO9 / SD_D2
SPI_INT / SD_D1
SPI_MOSI / SD_CMD
SPI_MISO / SD_D0
SPI_CLK / SD_CLK
GND_1
VDD3V3_1
EN
NRST
GND_2
VDD5V
D0 _ GPIO16
D1 _ GPIO5
D2 _ GPIO4
D3 _ GPIO0
D4 _ GPIO2 / TXD1
VDD3V3_3
GND_4
D5 _ GPIO14 / HSPICLK
D6 _ GPIO12 / HSPIQ
D7 _ GPIO13 / RXD2 / HSPID
D8 _ GPIO15 / TXD2 / HSPICS
D9 _ RXD0 / GPIO3
D10 _ TXD0 / GPIO1
GND_3
VDD3V3_2
NOISE
SCL
SDA
OUT_to_encoder_1
PIR
OUT_to_encoder_2
OUT_to_encoder_3
OUT_to_encoder_4
butt
day/night
buzzer
RST
NRST
button_right_angle
R11
10K
micro USB
GND
D+
D-
Vbus
IC1
ADJ/GND
VOUT_1
VIN
VOUT_2
LD1117S33CTR
C1
10uF
C2
4,7uF
C3
4,7uF
C4
4,7uF
C5
4,7uF
C6
100nF
R4
430R
POWER
LED
PIR
Terminal
R1
2K
R2
1K
LDR
282834-2
R7
3K
FSR
R10
3K
Gas 2
R12
1K
R14
2K
Gas 1
R13
1K
R15
2K
NOISE
R3
2K
R5
1K
I2C_2
JST-4-STRAIGHT
I2C_1
JST-4-STRAIGHT
C7
100nF
VR1
N6L25T3N-103-3030
Butt
R24
3K
Buzzer
Day/Night
P1
P2
P3
Header 3
IC2
PCF8591T_2,512
AIN0
AIN1
AIN2
AIN3
A0
A1
A2
VSS
VDD
AOUT
VREF
AGND
EXT
OSC
SCL
SDA
A_OUT
C8
100nF
R8
4K7
R9
4K7
S1
SWITHCER
IC3
HT12E-20SOP
NC_1
NC_2
VT
OSC1
OSC2
DIN
D11
D10
D9
D8
R6
1M
RF1
VCC
DATA
RF_trans
Title
Size
A
Number
Revision
Date:
26. 8. 2020
Sheet
of
File:
C:\Users\..\AP_NURSE_base_station_schematic.SchDoc
Drawn By: