Project 3: 4-bit Adder/Subtractor

By: Vy Tang

ID: 77659006

2/28/26

Introduction

The objective of this report is to design a 4-bit adder/subtractor and verify addition/subtraction operations via transient response analysis. Essentially, the 4-bit adder will receive two input 4-bit numbers denoted by $A = A_0A_1A_2A_3$ and $B = B_0B_1B_2B_3$ and using transient response, the results are shown via $S = S_0S_1S_2S_3$. To implement the 4-bit adder/subtractor, several fundamental logic gates were first designed using static CMOS configurations, including XNOR and NAND gates. These gates were then used to construct half-adders and full-adders, which were subsequently integrated to form the complete 4-bit adder/subtractor circuit in the schematic section.

Theory

To design the four-bit adder and subtractor, we need to design the NAND gates first. Below are the truth table of the NAND gate and the CMOS circuit diagram.

A	B	Q
0	0	1
0	1	1
1	0	1
1	1	0

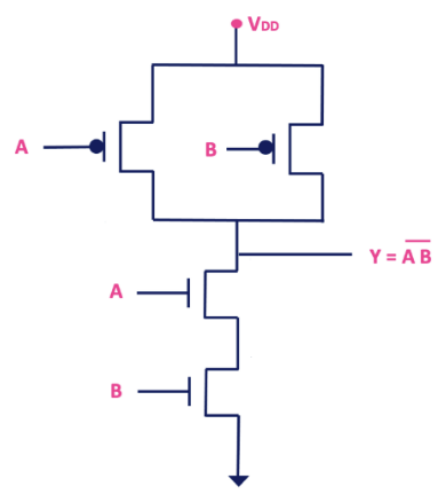

To construct the NAND gate, simply put two NMOS in series for the PUN and two PMOS in parallel for the PUN.

Next, we need to create an XNOR circuit in order to create the half-bit adder circuit.

A	B	Q
0	0	1
0	1	0
1	0	0
1	1	1

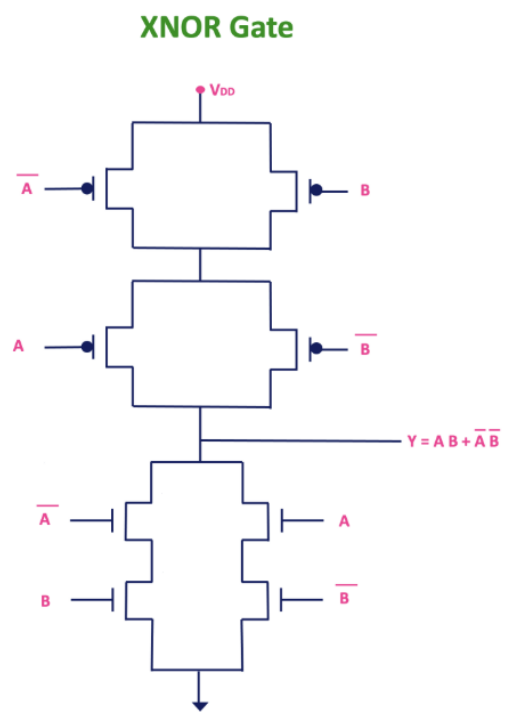

To create the CMOS logic for the XNOR circuit, the PDN consists of 4 NMOS in total where two are placed in series and parallel to each other. The same configuration is set up in the PUN for the PMOS.

Now that I have XNOR and NAND, I can build a half-adder circuit using this configuration. Note that although it uses an XOR and an AND logic gate, we can use an inverter to make it an XOR and an AND logic gate correspondingly.

Half Adder

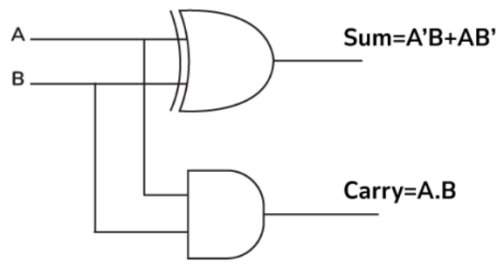

Truth Table

A	B	S	C
0	0	0	0
0	1	1	0
1	0	1	0
1	1	0	1

From this point on, we can use the half adder to create a full adder as shown below.

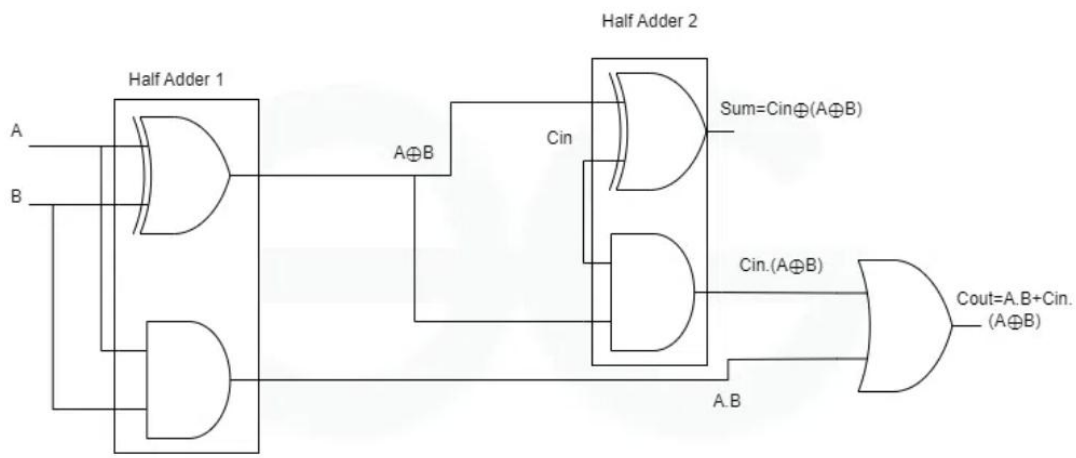

Finally, after we have our full-bit adder, we can construct aa 4-bit adder/subtracter shown in the following figure:

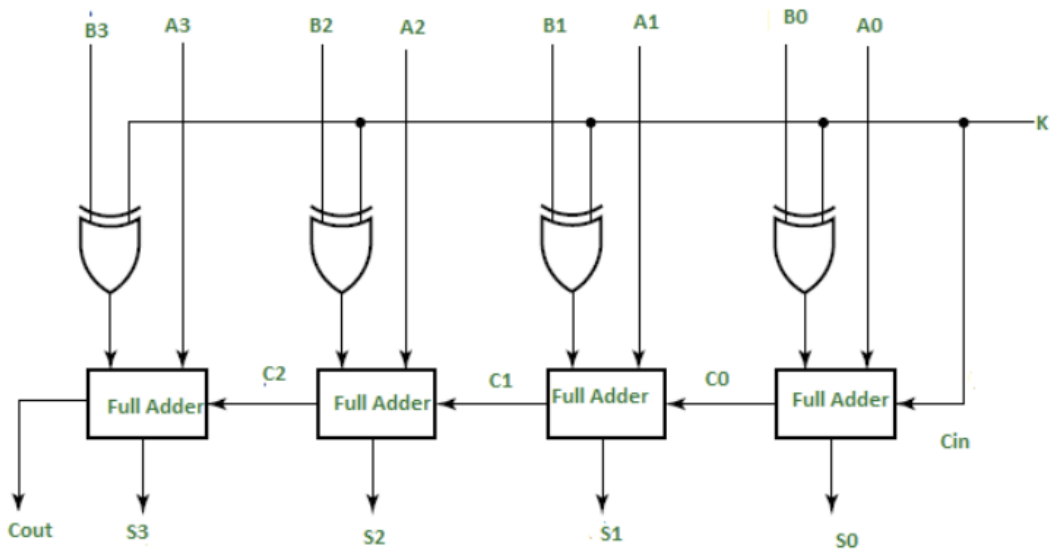
B3
A3
B2
A2
B1
A1
B0
A0
K
Full Adder
Full Adder
Full Adder
Full Adder
C2
C1
C0
Cin
Cout
S3
S2
S1
S0

Design & Question

Schematic Design

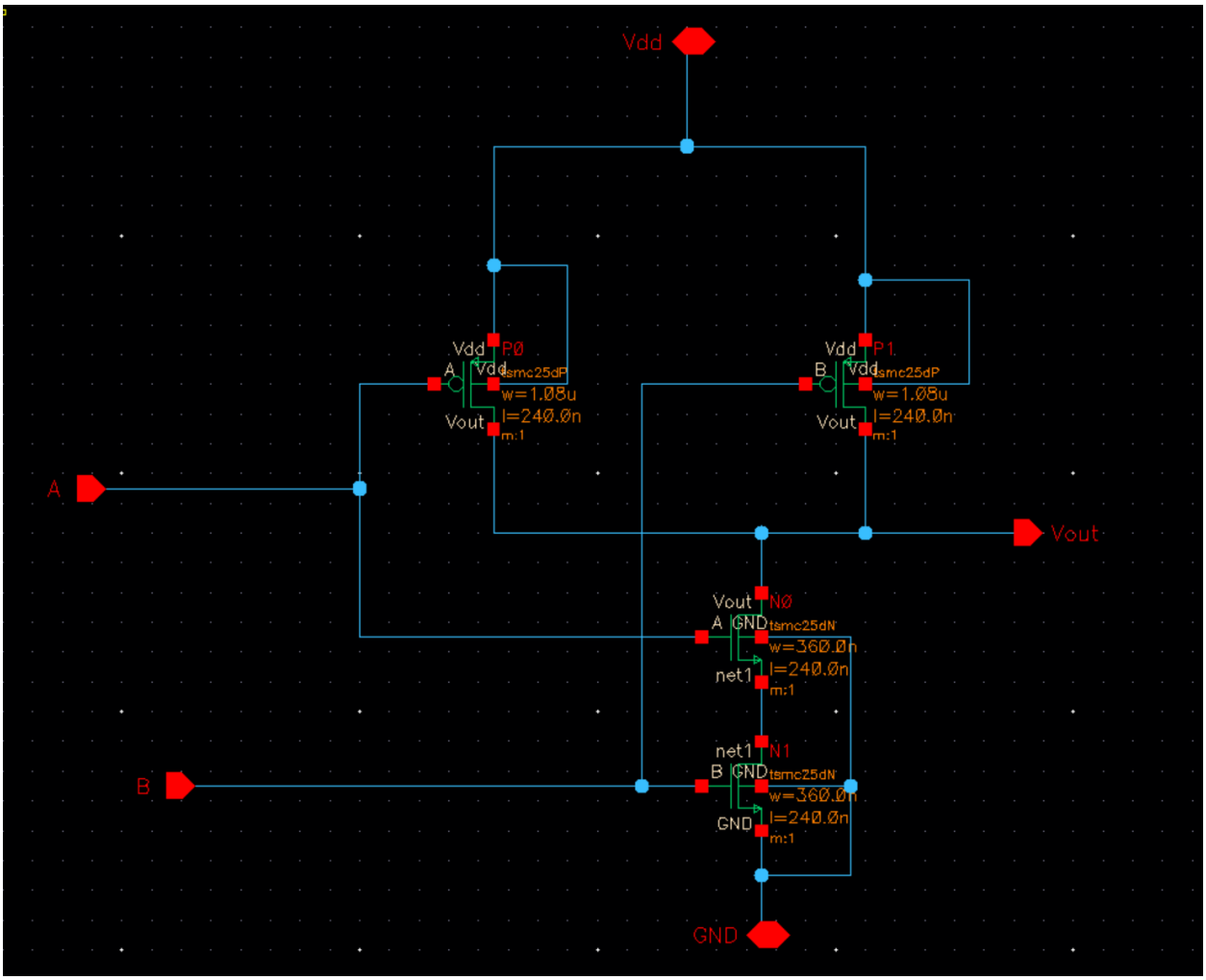

Figure 1. 2 input NAND gate

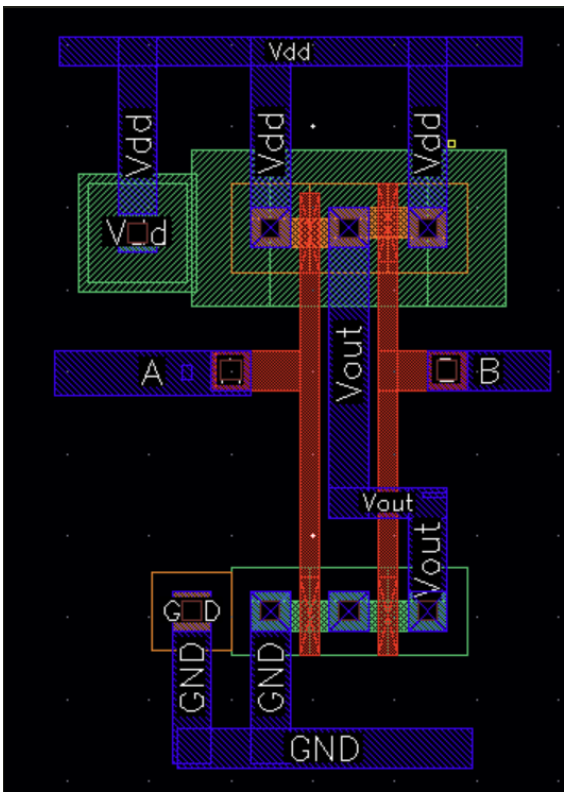

Figure 2. 2 input NAND gate layout

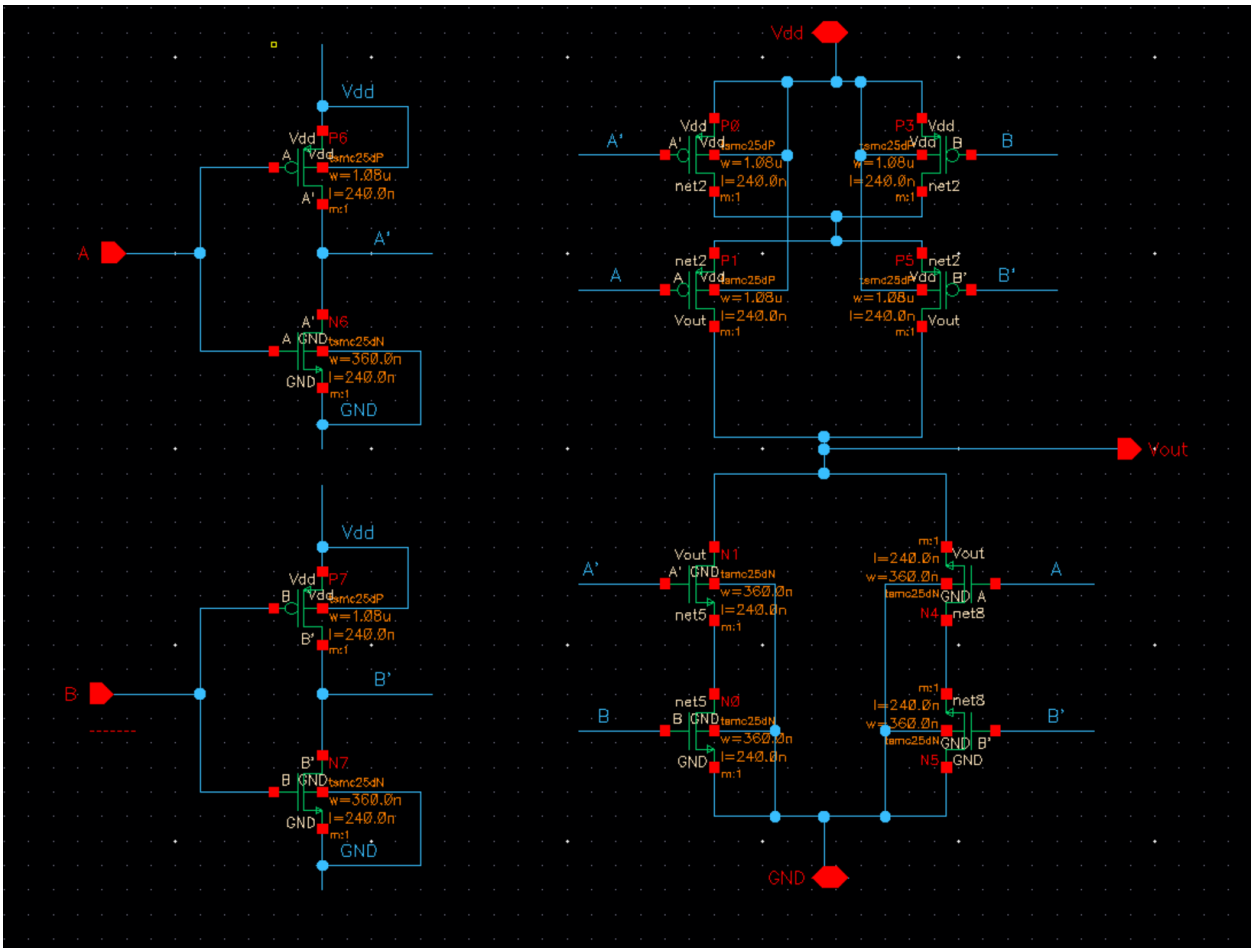

Figure 3. 2 input XNOR gate

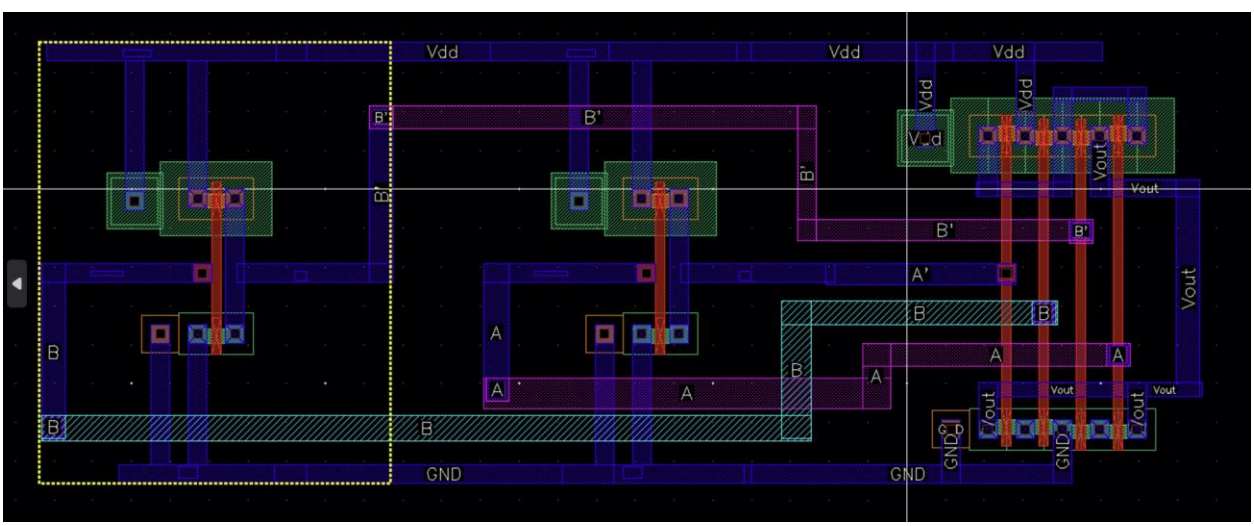

Figure 4. 2 input XNOR gate layout

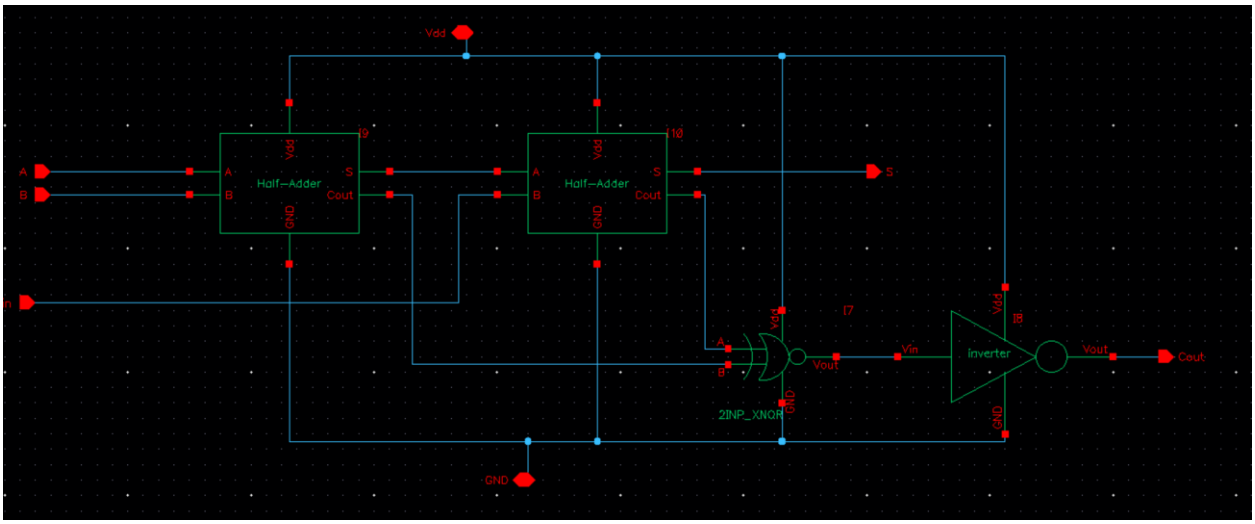

Figure 3. 2 input XNOR gate

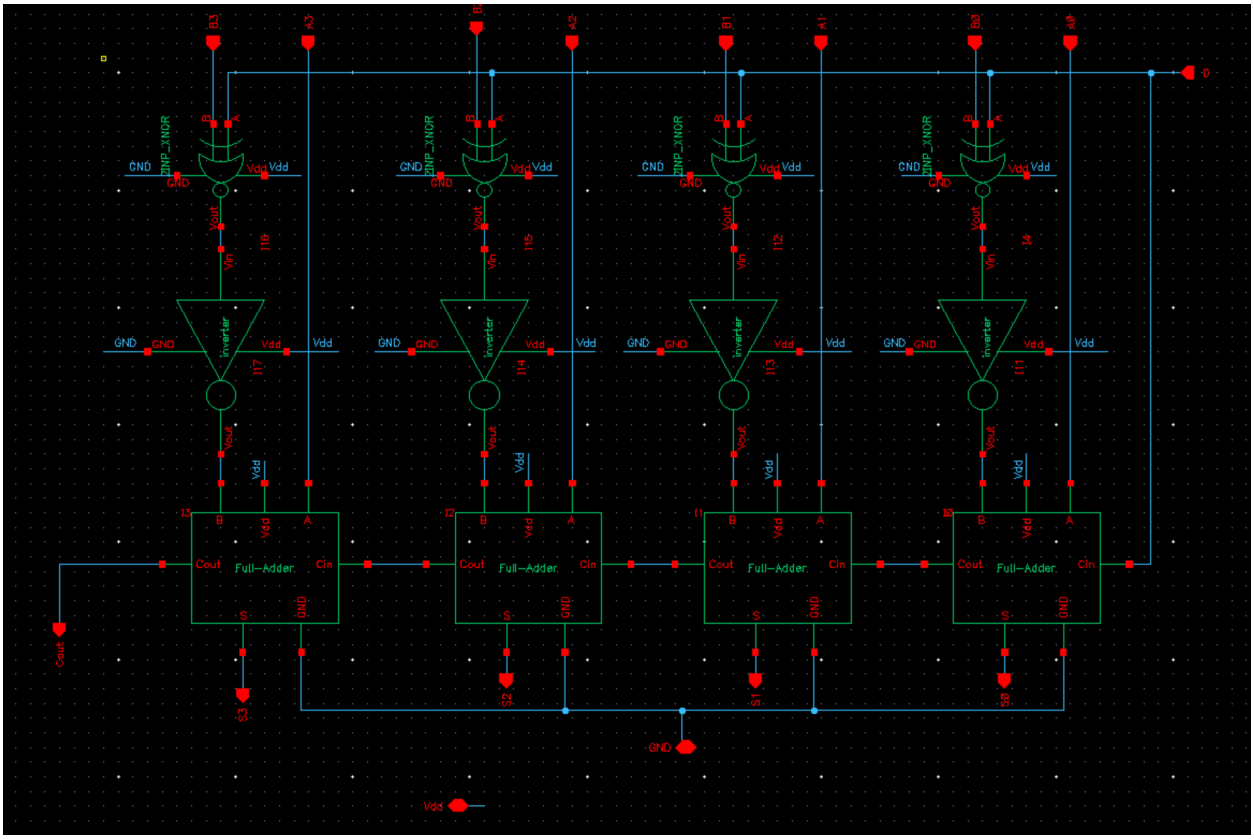

Figure 4. 4 bit adder schematic

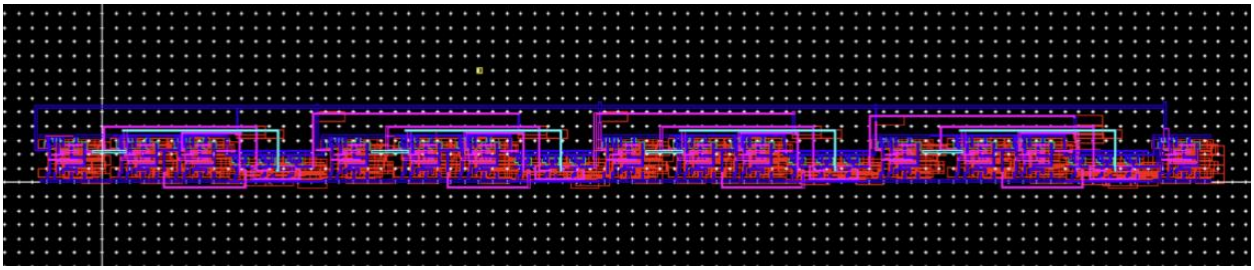

Figure 5. 4 bit adder schematic layout

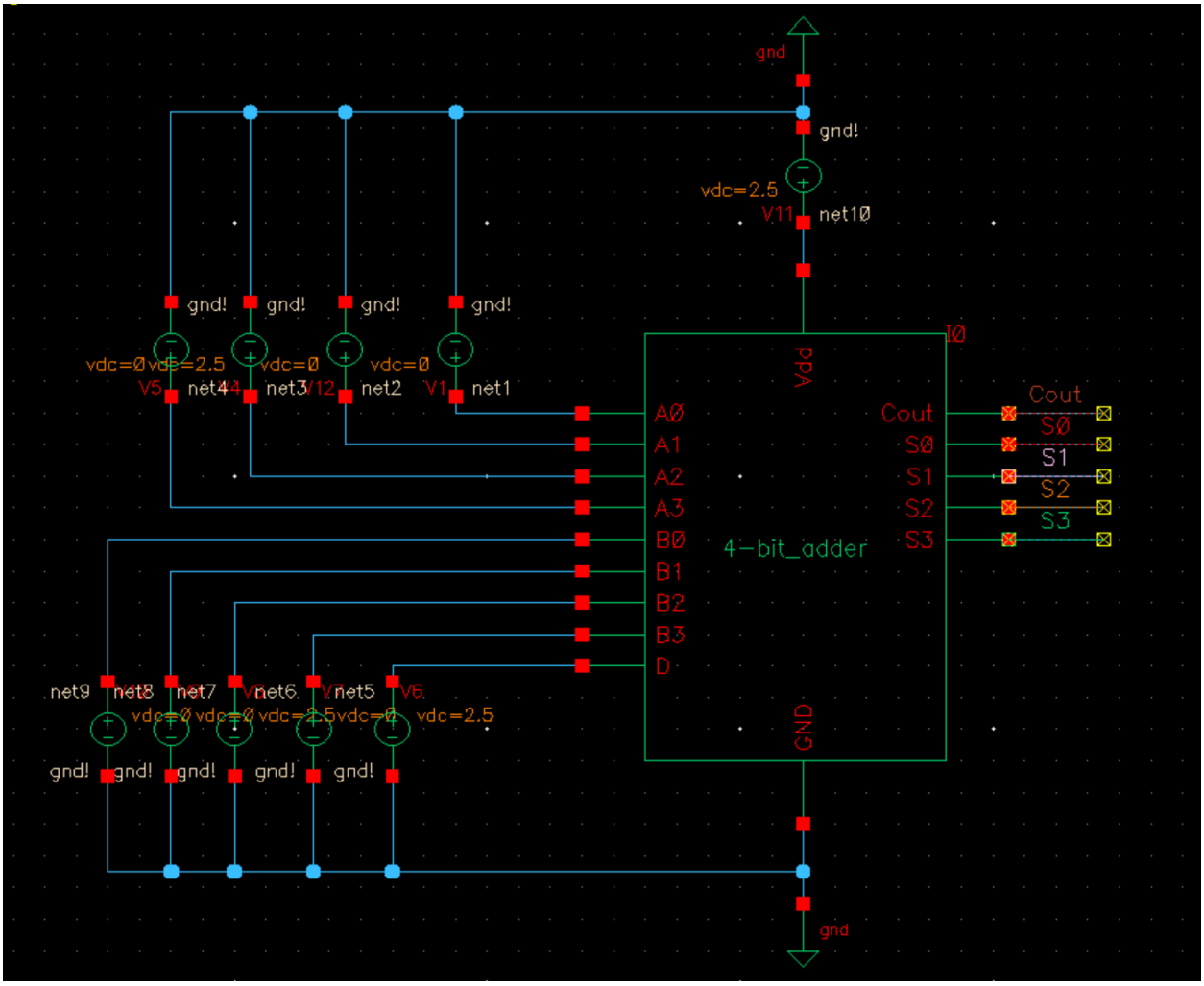

Figure 6. 4 bit adder schematic testbench

In the testbench configuration, the D pin is used to determine whether the operation is subtraction or addition with ‘D’ being pulled high being subtraction and D being pulled low an addition operation.

Verifying 1+2 = 3

Expected Result : 0001 + 0010 = 0011 ➔ $S_3 = 0$, $S_2 = 0$, $S_1 = 1$, $S_0 = 1$, Cout = 0

Note that 2.5V is considered being a digital '1' and approximately 67nV is a digital '0'

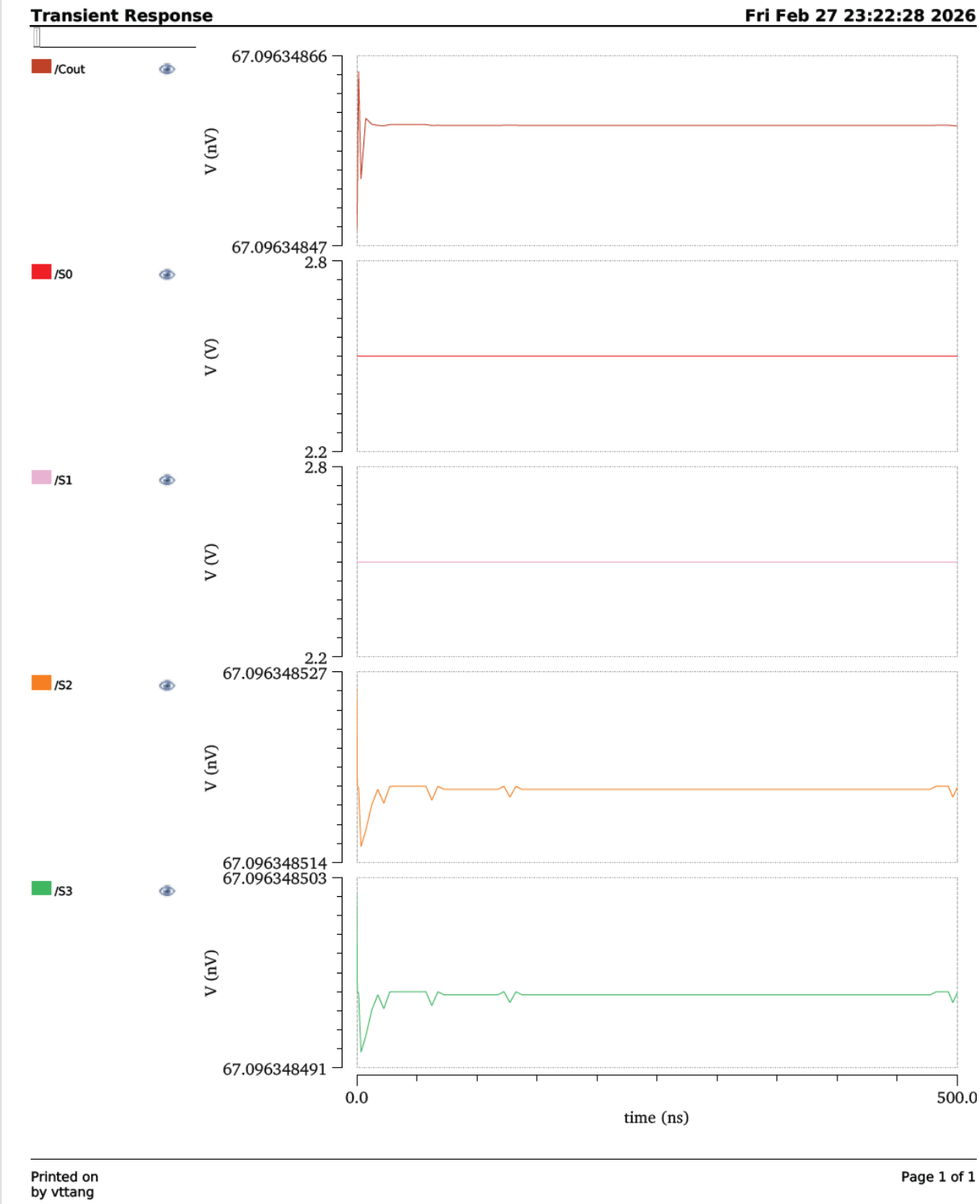

Figure 7. Operation of 1 + 2 = 3 results

Verifying 6 – 7 = -1

Since its minus, do twos complement

6 → 0110

7 → 0111 → 1000 + 1 → 1001

0110 + 1001 = 1111₂ → Cout = 0

$\boxed{S_0 = 1,\ S_1 = 1,\ S_2 = 1,\ S_3 = 1,\ Cout = 0}$

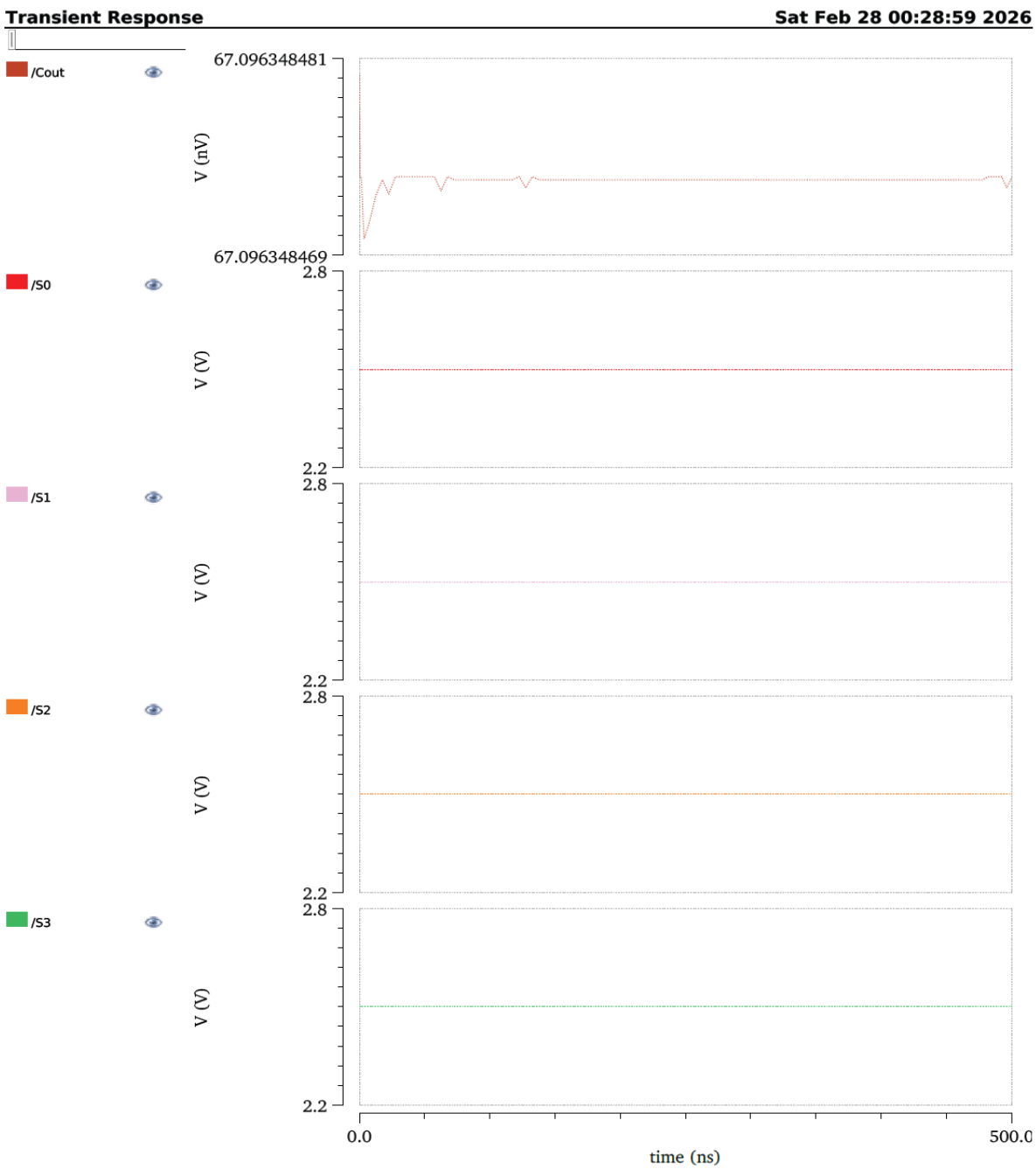

Figure 8. Operation of 6 - 7 = -1 results

Verifying 5 + 2 = 7

5+2 operation

5 → 0101
2 → 0010

$$\begin{array}{r} 0101 \\ 0010 \\ \hline 0111 \end{array}$$

→ $S_0 = 1,\ S_1 = 1,\ S_2 = 1,\ S_3 = 0$
$C_{out} = 0$

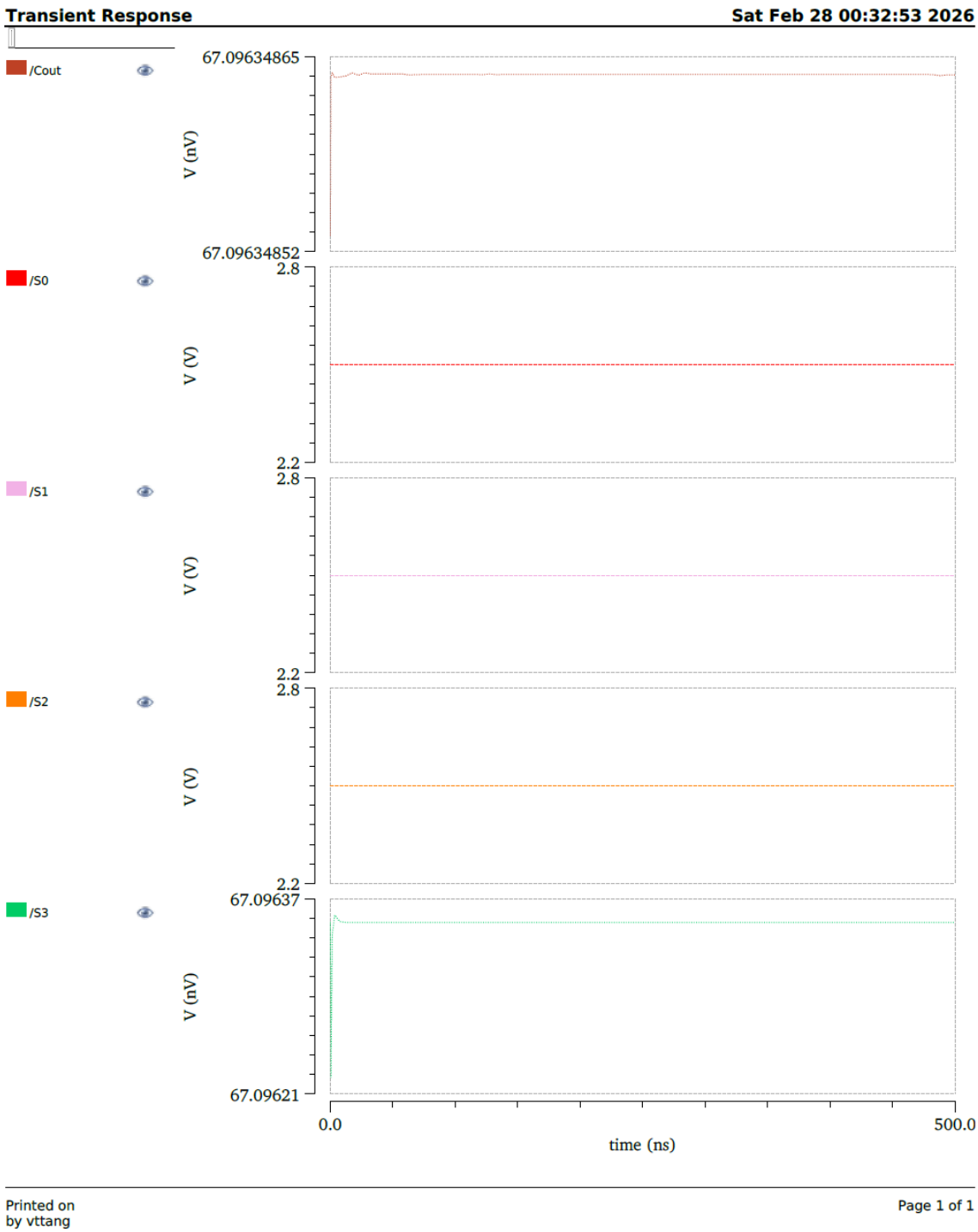

Figure 9. Operation of 5 + 2 = 7 results

Verifying 4 – 4 = 0

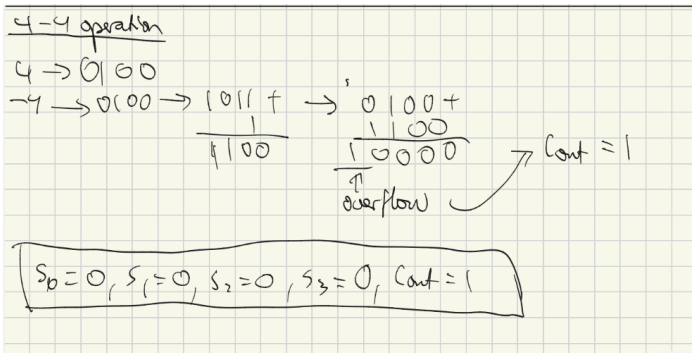

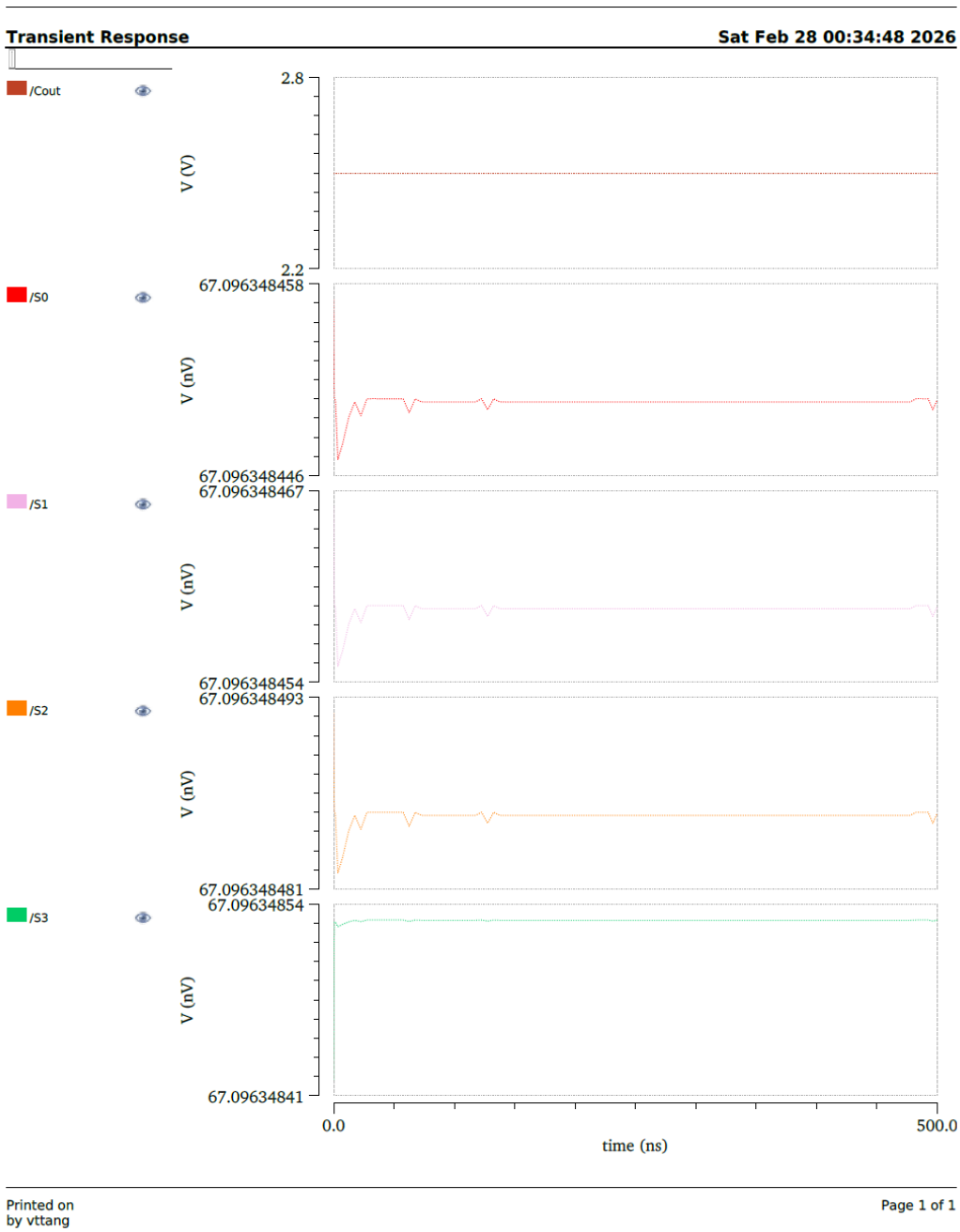

Figure 10. Operation of 4 – 4 = 0 results

From these waveforms, the four-bit adder/subtractor was able to successfully compute 4-bit subtractions and additions as expected. However, as can be seen, in an ideal world, some of the 'low' state values would be pulled to zero. When the CMOS gate is off, there are small amounts of currents still leaking through the transistors due to subthreshold conduction.

Conclusion

Overall, in this lab I successfully implemented a four-bit adder/subtracter circuit using a combination of logic gates. I first started creating XNOR and NAND gates using static CMOS structures to then build half-adders and full adders. From that point, I was able to create a four-bit adder/subtractor using full adders and XOR gates in which I inverted the XNOR gate. Using 'D' pin, I was able to configure the mode of operation with D being pulled high to be a subtraction operation and vice-versa being addition. From the plots, we can see that the four-bit adder/subtractor was able to perform 4-bit addition and subtraction operations. However, because of subthreshold conduction and gate leakage, we see that certain outputs can't be pulled down to 0V but at 67nV. Since the voltage is small, we can assume that it's negligible and be considered a digital '0'.