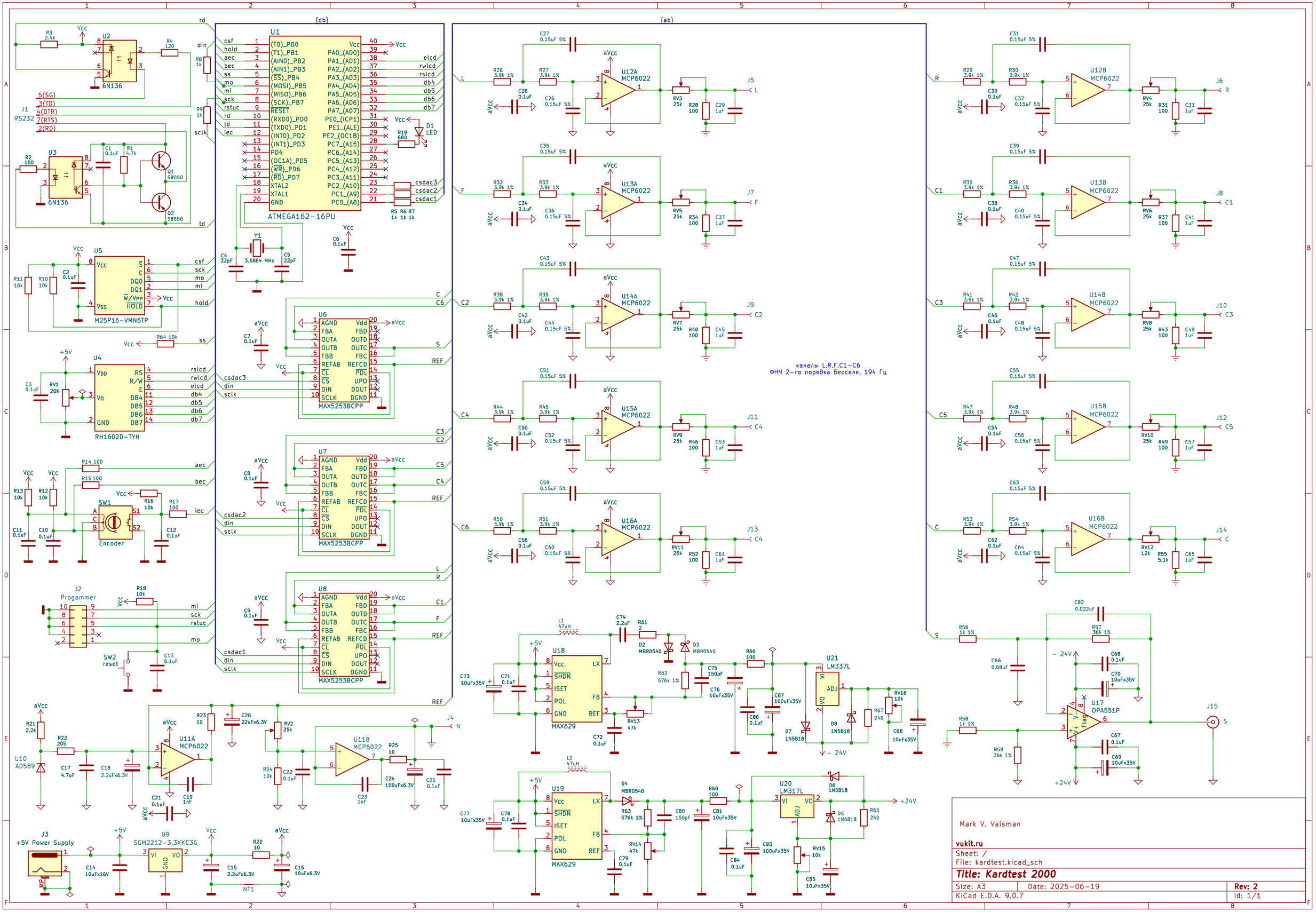
{db}
{ab}
U1
ATMEGA162-16PU
U2
6N136
U3
6N136
J1
RS232
U5
M25P16-VMN6TP
U4
RH1602D-TYH
SW1
Encoder
J2
Progammer
SW2
reset
U6
MAX5253BCPP
U7
MAX5253BCPP
U8
MAX5253BCPP
U12A
MCP6022
U12B
MCP6022
U13A
MCP6022
U13B
MCP6022
U14A
MCP6022
U14B
MCP6022
U15A
MCP6022
U15B
MCP6022
U16A
MCP6022
U16B
MCP6022
каналы L,R,F,C1–C6
ФНЧ 2-го порядка Бесселя, 194 Гц
U18
MAX629
U19
MAX629
U21
LM337L
U20
LM317L
U17
OPA551P
U11A
MCP6022
U11B
MCP6022
U10
AD589
J3
+5V Power Supply
U9
SGM2212-3.3XKC3G
J15
Mark V. Vaisman
vukit.ru
Sheet: /
File: kardtest.kicad_sch
Title: Kardtest 2000
Size: A3
Date: 2025-06-19
Rev: 2
KiCad E.D.A. 9.0.7
Id: 1/1