PLC_2 [CPU 1214C DC/DC/DC]

PLC_2			
Project information			
Name	PLC_2	**Author**	SUS
Comment		**Slot**	1
Rack	0		
Catalog information			
Short designation	CPU 1214C DC/DC/DC	**Description**	Work memory 100 KB; 24VDC power supply with DI14 x 24VDC SINK/SOURCE, DQ10 x 24VDC and AI2 on board; 6 high-speed counters and 4 pulse outputs on-board; signal board expands on-board I/O; up to 3 communication modules for serial communication; up to 8 signal modules for I/O expansion; PROFINET IO controller, I-device, transport protocol TCP/IP, secure Open User Communication, S7 communication, Web server, OPC UA: Server DA
Article number	6ES7 214-1AG40-0XB0	**Firmware version**	V4.4
	False		

Connection resources

	Station resources - Reserved - Maximum	Station resources - Reserved - Configured	Station resources - Dynamic - Configured	Module resources - PLC_2 [CPU 1214C DC/DC/DC] - Configured
Maximum number of resources:		62	6	68
	Maximum	Configured	Configured	Configured
PG communication:	4	-	-	-
HMI communication:	12	0	0	0
S7 communication:	8	0	0	0
Open user communication:	8	0	0	0
Web communication:	30	-	-	-
Other communication:	-	-	0	0
Total resources used:		0	0	0
Available resources:		62	6	68

Overview of addresses\Overview of addresses\Overview of addresses			
Inputs	True	**Outputs**	True
Address gaps	False	**Slot**	True

Type	Addr. from	Addr. to	Module	PIP	Device name	Device number	Size	Master / IO system	Rack	Slot
I	0	1	DI 14/DQ 10_1	Automatic update	PLC_2 [CPU 1214C DC/DC/DC]	-	2 Bytes	-	0	1 1
O	0	1	DI 14/DQ 10_1	Automatic update	PLC_2 [CPU 1214C DC/DC/DC]	-	2 Bytes	-	0	1 1
I	64	67	AI 2_1	Automatic update	PLC_2 [CPU 1214C DC/DC/DC]	-	4 Bytes	-	0	1 2
I	1000	1003	HSC_1	Automatic update	PLC_2 [CPU 1214C DC/DC/DC]	-	4 Bytes	-	0	1 16
I	1004	1007	HSC_2	Automatic update	PLC_2 [CPU 1214C DC/DC/DC]	-	4 Bytes	-	0	1 17
I	1008	1011	HSC_3	Automatic update	PLC_2 [CPU 1214C DC/DC/DC]	-	4 Bytes	-	0	1 18
I	1012	1015	HSC_4	Automatic update	PLC_2 [CPU 1214C DC/DC/DC]	-	4 Bytes	-	0	1 19
I	1016	1019	HSC_5	Automatic update	PLC_2 [CPU 1214C DC/DC/DC]	-	4 Bytes	-	0	1 20
I	1020	1023	HSC_6	Automatic update	PLC_2 [CPU 1214C DC/DC/DC]	-	4 Bytes	-	0	1 21

PLC_2 [CPU 1214C DC/DC/DC] / Program blocks

Main [OB1]

Main Properties					
General					
Name	Main	**Number**	1	**Type**	OB
Language	LAD	**Numbering**	Automatic		
Information					
Title	"Main Program Sweep (Cycle)"	**Author**		**Comment**	
Family		**Version**	0.1	**User-defined ID**	

Name	Data type	Default value
Input		
Initial_Call	Bool	
Remanence	Bool	
Temp		
Constant		

Network 1:

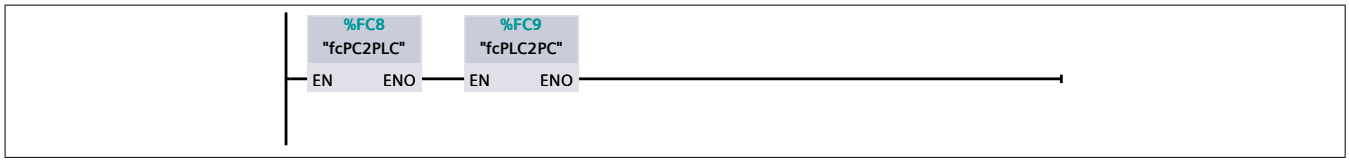

Network 2: AutoMode

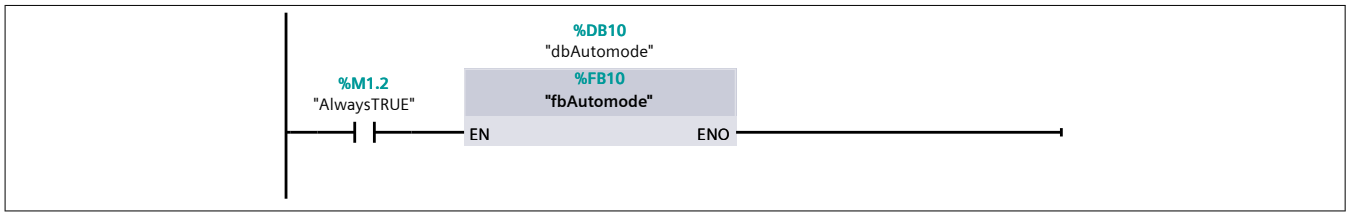

Network 3:

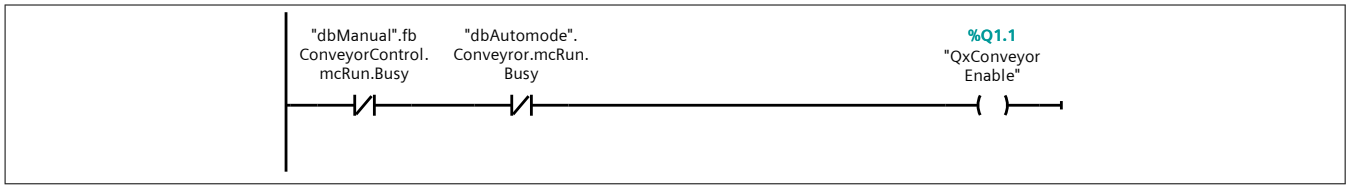

Network 4:

PLC_2 [CPU 1214C DC/DC/DC] / Program blocks

gdbDeltaPara [DB8]

gdbDeltaPara Properties					
General					
Name	gdbDeltaPara	**Number**	8	**Type**	DB
Language	DB	**Numbering**	Automatic		
Information					
Title		**Author**		**Comment**	
Family		**Version**	0.1	**User-defined ID**	

Name	Data type	Start value	Retain
Static			
udtPara	"Delta"		True
udtArm1Motor	"SingleMotor"		True
udtArm2Motor	"SingleMotor"		True
udtArm3Motor	"SingleMotor"		True
udtConveyor	"SingleMotor"		True

PLC_2 [CPU 1214C DC/DC/DC] / Program blocks

fcData2Step [FC5]

fcData2Step Properties					
General					
Name	fcData2Step	**Number**	5	**Type**	FC
Language	SCL	**Numbering**	Automatic		
Information					
Title		**Author**		**Comment**	
Family		**Version**	0.1	**User-defined ID**	

Name	Data type	Default value
Input		
IiStep	Int	
Output		
InOut		
IQarStep	Array[0..30] of Bool	
Temp		
ifor	Int	
Constant		
Return		
fcData2Step	Void	

```
0001 FOR #ifor := 0 TO 30 DO
0002   // Statement section FOR
0003   #IQarStep[#ifor] := #IiStep = #ifor;
0004 END_FOR;
0005
```

PLC_2 [CPU 1214C DC/DC/DC] / Program blocks / Delta_Control / Inverse-Kinematic

fbInverseKinematic_Delta [FB1]

fbInverseKinematic_Delta Properties					
General					
Name	fbInverseKinematic_Delta	**Number**	1	**Type**	FB
Language	LAD	**Numbering**	Automatic		
Information					
Title		**Author**		**Comment**	
Family		**Version**	0.1	**User-defined ID**	

Name	Data type	Default value	Retain
Input			
IrX	Real	0.0	Non-retain
IrY	Real	0.0	Non-retain
IrZ	Real	0.0	Non-retain
IrRb	Real	0.0	Non-retain
IrLbc	Real	0.0	Non-retain
IrRee	Real	0.0	Non-retain
IrLfa	Real	0.0	Non-retain
Output			
QrTheta1	Real	0.0	Non-retain
QrTheta2	Real	0.0	Non-retain
QrTheta3	Real	0.0	Non-retain
QxInvalid	Bool	false	Non-retain
InOut			
Static			
rX1	Real	0.0	Non-retain
rY1	Real	0.0	Non-retain
rZ1	Real	0.0	Non-retain
rX2	Real	0.0	Non-retain
rY2	Real	0.0	Non-retain
rZ2	Real	0.0	Non-retain
rX3	Real	0.0	Non-retain
rY3	Real	0.0	Non-retain
rZ3	Real	0.0	Non-retain
Temp			
Constant			

Network 1:

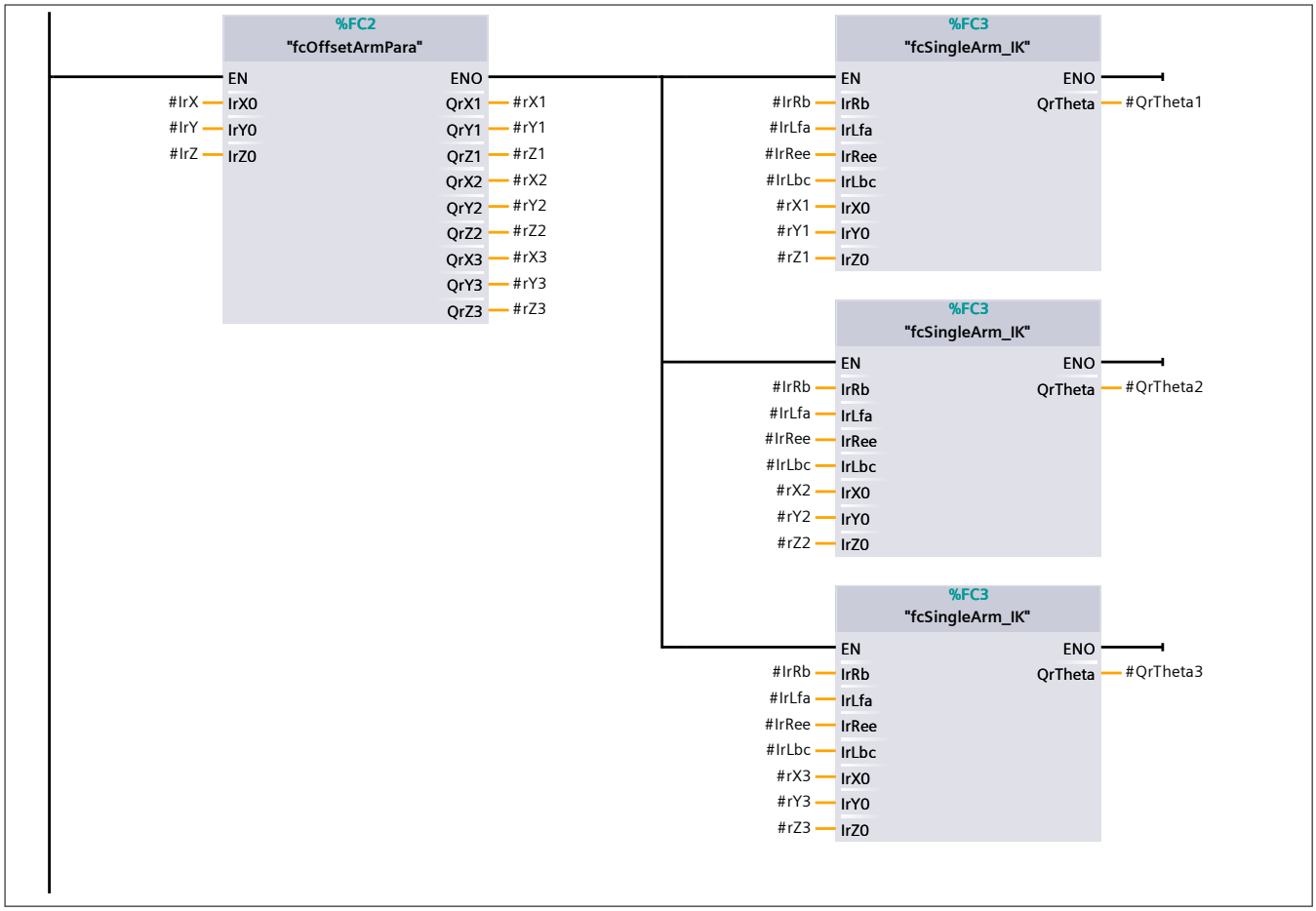
%FC2
"fcOffsetArmPara"
EN
ENO
#IrX
IrX0
#IrY
IrY0
#IrZ
IrZ0
QrX1
#rX1
QrY1
#rY1
QrZ1
#rZ1
QrX2
#rX2
QrY2
#rY2
QrZ2
#rZ2
QrX3
#rX3
QrY3
#rY3
QrZ3
#rZ3
%FC3
"fcSingleArm_IK"
EN
ENO
#IrRb
IrRb
#IrLfa
IrLfa
#IrRee
IrRee
#IrLbc
IrLbc
#rX1
IrX0
#rY1
IrY0
#rZ1
IrZ0
QrTheta
#QrTheta1
%FC3
"fcSingleArm_IK"
EN
ENO
#IrRb
IrRb
#IrLfa
IrLfa
#IrRee
IrRee
#IrLbc
IrLbc
#rX2
IrX0
#rY2
IrY0
#rZ2
IrZ0
QrTheta
#QrTheta2
%FC3
"fcSingleArm_IK"
EN
ENO
#IrRb
IrRb
#IrLfa
IrLfa
#IrRee
IrRee
#IrLbc
IrLbc
#rX3
IrX0
#rY3
IrY0
#rZ3
IrZ0
QrTheta
#QrTheta3

Network 2:

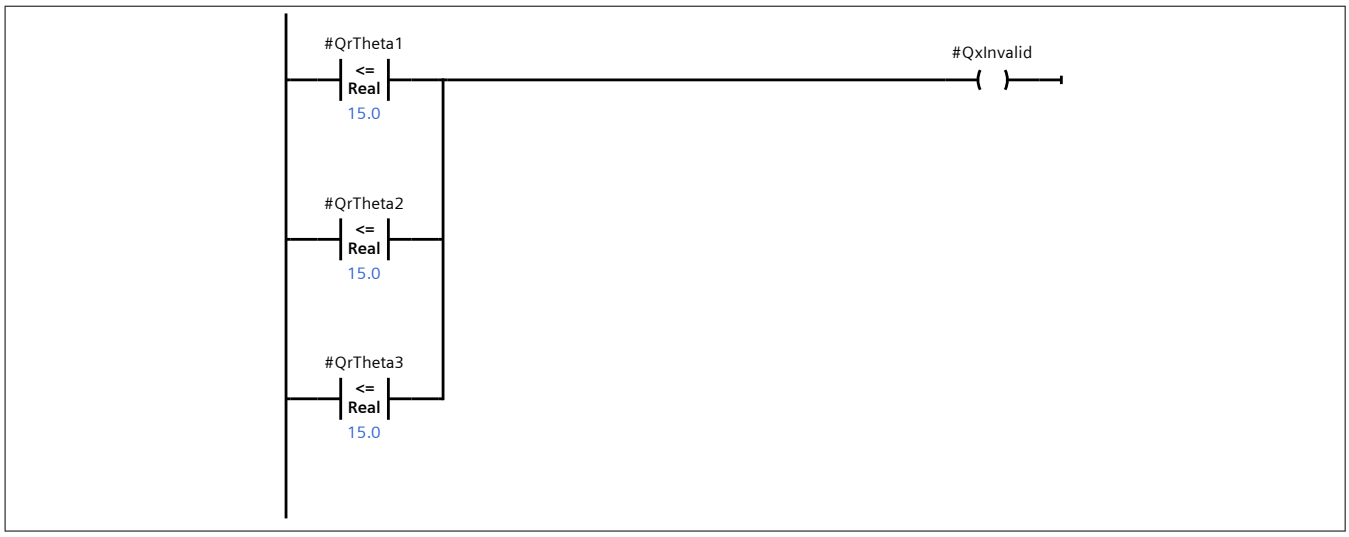
#QrTheta1
<=
Real
15.0
#QrTheta2
<=
Real
15.0
#QrTheta3
<=
Real
15.0
#QxInvalid

PLC_2 [CPU 1214C DC/DC/DC] / Program blocks / Delta_Control / Inverse-Kinematic

fcOffsetArmPara [FC2]

fcOffsetArmPara Properties					
General					
Name	fcOffsetArmPara	**Number**	2	**Type**	FC
Language	SCL	**Numbering**	Automatic		
Information					
Title		**Author**		**Comment**	
Family		**Version**	0.1	**User-defined ID**	

Name	Data type	Default value
Input		
IrX0	Real	
IrY0	Real	
IrZ0	Real	
Output		
QrX1	Real	
QrY1	Real	
QrZ1	Real	
QrX2	Real	
QrY2	Real	
QrZ2	Real	
QrX3	Real	
QrY3	Real	
QrZ3	Real	
InOut		
Temp		
Constant		
cos120	Real	-0.5
sin120	Real	0.866
cos240	Real	-0.5
sin240	Real	-0.866
Return		
fcOffsetArmPara	Void	

```
0001
0002 #QrX1 := #IrX0;
0003 #QrY1 := -#IrY0;
0004 #QrZ1 := #IrZ0;
0005
0006 #QrX2 := #IrX0 * #cos120 + #IrY0 * #sin120;
0007 #QrY2 := - (- #IrX0 * #sin120 + #IrY0 * #cos120);
0008 #QrZ2 := #IrZ0;
0009
0010 #QrX3 := #IrX0 * #cos240 + #IrY0 * #sin240;
0011 #QrY3 := - (- #IrX0 * #sin240 + #IrY0 * #cos240);
0012 #QrZ3 := #IrZ0;
```

PLC_2 [CPU 1214C DC/DC/DC] / Program blocks / Delta_Control / Inverse-Kinematic

fcSingleArm_IK [FC3]

fcSingleArm_IK Properties					
General					
Name	fcSingleArm_IK	**Number**	3	**Type**	FC
Language	SCL	**Numbering**	Automatic		
Information					
Title		**Author**		**Comment**	
Family		**Version**	0.1	**User-defined ID**	

Name	Data type	Default value
Input		
IrRb	Real	
IrLfa	Real	
IrRee	Real	
IrLbc	Real	
IrX0	Real	
IrY0	Real	
IrZ0	Real	
Output		
QrTheta	Real	
InOut		
Temp		
Yb	Real	
Ye	Real	
A	Real	
B	Real	
C	Real	
Delta	Real	
zj	Real	
yj	Real	
D	Real	
rP	Real	
Constant		
tan30	Real	0.57735
PI	Real	3.141593
Return		
fcSingleArm_IK	Void	

```
0001
0002 #Yb := - #IrRb;
0003 #Ye := #IrY0 - #IrRee;
0004
0005 #A := (SQR_REAL(#IrX0) + SQR_REAL(#Ye) + SQR_REAL(#IrZ0) +
0006   SQR_REAL(#IrLbc) - SQR_REAL(#IrLfa) - SQR_REAL(#Yb)) / (2.0 * #IrZ0);
0007 #B := (#Yb - #Ye) / #IrZ0;
0008
0009 #D := - SQR_REAL(#A + #B * #Yb) + #IrLbc * (SQR_REAL(#B) * #IrLbc + #IrLbc);
0010
0011 IF #D >= 0.0 THEN
```

```
0012
0013   #yj := (#Yb - #A * #B - SQRT_REAL(#D)) / (SQR_REAL(#B) + 1.0);
0014   #zj := #A + #B * #yj;
0015
0016   IF (#Yb - #yj) <> 0.0 THEN
0017     #QrTheta := ATAN_REAL(- #zj / (#Yb - #yj)) * 180.0 / #PI;
0018     IF #yj > #Yb THEN
0019       #QrTheta := #QrTheta + 180.0;
0020     END_IF;
0021   END_IF;
0022 ELSE
0023   #QrTheta := -999.0;
0024 END_IF;
```

PLC_2 [CPU 1214C DC/DC/DC] / Program blocks / Delta_Control / Inverse-Kinematic

fcAtan2 [FC1]

fcAtan2 Properties					
General					
Name	fcAtan2	**Number**	1	**Type**	FC
Language	SCL	**Numbering**	Automatic		
Information					
Title		**Author**		**Comment**	
Family		**Version**	0.1	**User-defined ID**	

Name	Data type	Default value
Input		
IrLower	Real	
IrUpper	Real	
Output		
QrResult	Real	
InOut		
Temp		
Constant		
PI	Real	3.1416
Return		
fcAtan2	Void	

```
0001 IF #IrLower > 0.0 THEN
0002   #QrResult := ATAN_REAL(#IrUpper / #IrLower);
0003 ELSE
0004   #QrResult := ATAN_REAL(#IrUpper / #IrLower) + #PI;
0005 END_IF;
```

PLC_2 [CPU 1214C DC/DC/DC] / Program blocks / Delta_Control / Inverse-Kinematic

dbInverseKinematic_Delta [DB7]

dbInverseKinematic_Delta Properties					
General					
Name	dbInverseKinematic_Delta	**Number**	7	**Type**	DB
Language	DB	**Numbering**	Automatic		
Information					
Title		**Author**		**Comment**	
Family		**Version**	0.1	**User-defined ID**	

Name	Data type	Start value	Retain
Input			
IrX	Real	0.0	False
IrY	Real	0.0	False
IrZ	Real	0.0	False
IrRb	Real	0.0	False
IrLbc	Real	0.0	False
IrRee	Real	0.0	False
IrLfa	Real	0.0	False
Output			
QrTheta1	Real	0.0	False
QrTheta2	Real	0.0	False
QrTheta3	Real	0.0	False
QxInvalid	Bool	false	False
InOut			
Static			
rX1	Real	0.0	False
rY1	Real	0.0	False
rZ1	Real	0.0	False
rX2	Real	0.0	False
rY2	Real	0.0	False
rZ2	Real	0.0	False
rX3	Real	0.0	False
rY3	Real	0.0	False
rZ3	Real	0.0	False

PLC_2 [CPU 1214C DC/DC/DC] / Program blocks / Delta_Control / Inverse-Kinematic

fcInverseKinematic [FC11]

fcInverseKinematic Properties					
General					
Name	fcInverseKinematic	**Number**	11	**Type**	FC
Language	LAD	**Numbering**	Automatic		
Information					
Title		**Author**		**Comment**	
Family		**Version**	0.1	**User-defined ID**	

Name	Data type	Default value
Input		
IrX	Real	
IrY	Real	
IrZ	Real	
IrRb	Real	
IrLbc	Real	
IrRee	Real	
IrLfa	Real	
Output		
QrTheta1	Real	
QrTheta2	Real	
QrTheta3	Real	
QxInvalid	Bool	
InOut		
Temp		
rX1	Real	
rY1	Real	
rZ1	Real	
rX2	Real	
rY2	Real	
rZ2	Real	
rX3	Real	
rY3	Real	
rZ3	Real	
Constant		
Return		
fcInverseKinematic	Void	

Network 1:

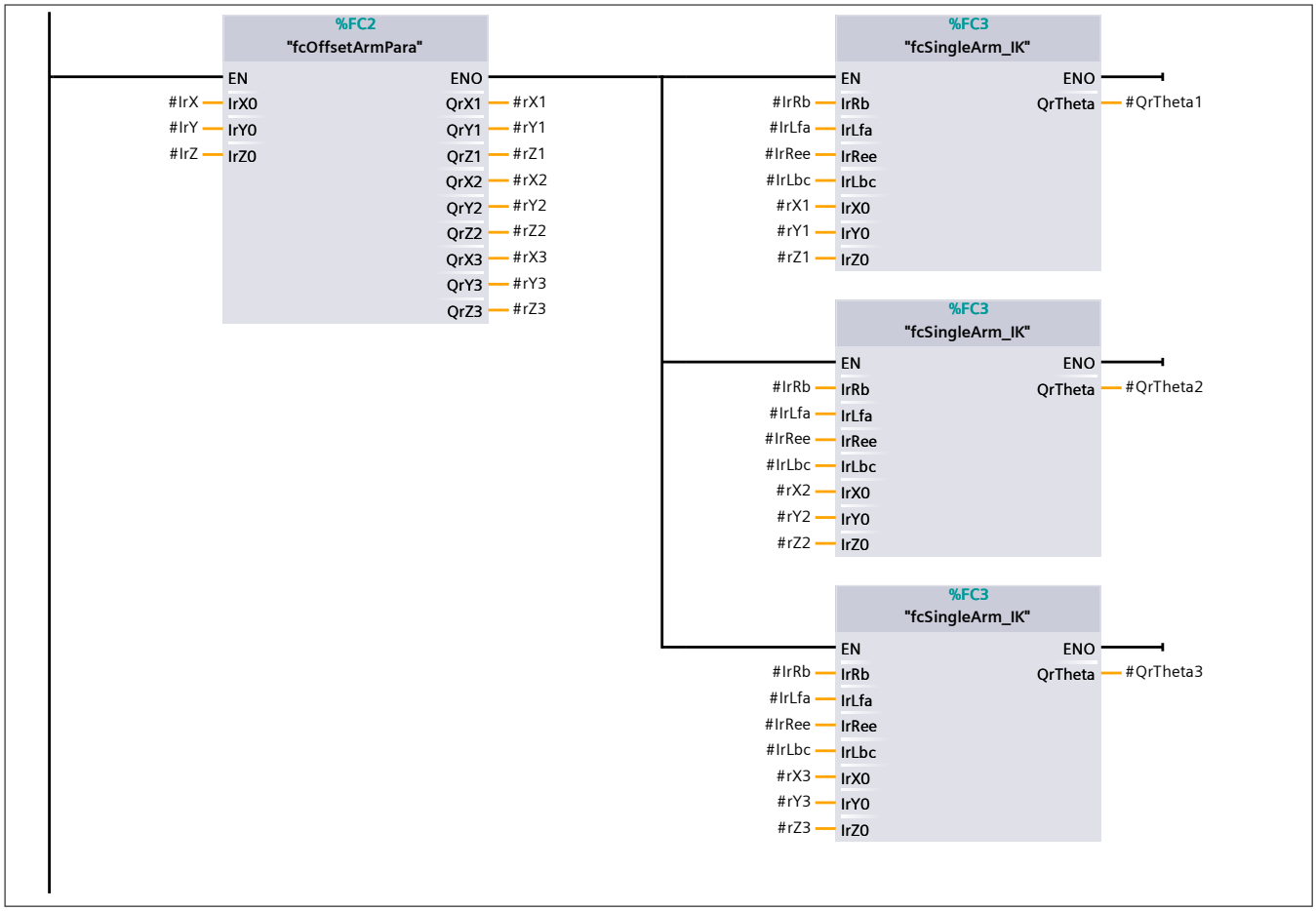
%FC2
"fcOffsetArmPara"
EN
ENO
#IrX IrX0
#IrY IrY0
#IrZ IrZ0
QrX1 #rX1
QrY1 #rY1
QrZ1 #rZ1
QrX2 #rX2
QrY2 #rY2
QrZ2 #rZ2
QrX3 #rX3
QrY3 #rY3
QrZ3 #rZ3
%FC3
"fcSingleArm_IK"
EN
ENO
#IrRb IrRb
#IrLfa IrLfa
#IrRee IrRee
#IrLbc IrLbc
#rX1 IrX0
#rY1 IrY0
#rZ1 IrZ0
QrTheta #QrTheta1
%FC3
"fcSingleArm_IK"
EN
ENO
#IrRb IrRb
#IrLfa IrLfa
#IrRee IrRee
#IrLbc IrLbc
#rX2 IrX0
#rY2 IrY0
#rZ2 IrZ0
QrTheta #QrTheta2
%FC3
"fcSingleArm_IK"
EN
ENO
#IrRb IrRb
#IrLfa IrLfa
#IrRee IrRee
#IrLbc IrLbc
#rX3 IrX0
#rY3 IrY0
#rZ3 IrZ0
QrTheta #QrTheta3

Network 2:

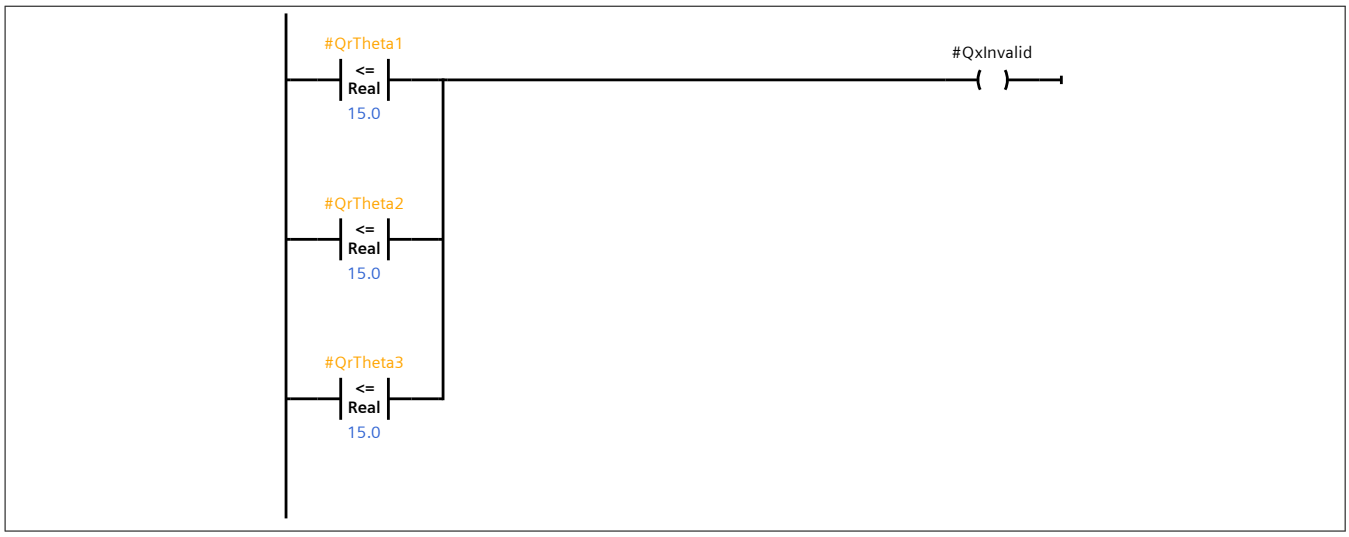
#QrTheta1
<=
Real
15.0
#QrTheta2
<=
Real
15.0
#QrTheta3
<=
Real
15.0
#QxInvalid

PLC_2 [CPU 1214C DC/DC/DC] / Program blocks / Delta_Control / AutoProgram

fbAutomode [FB10]

fbAutomode Properties					
General					
Name	fbAutomode	**Number**	10	**Type**	FB
Language	LAD	**Numbering**	Automatic		
Information					
Title		**Author**		**Comment**	
Family		**Version**	0.1	**User-defined ID**	

Name	Data type	Default value	Retain
Input			
Output			
InOut			
Static			
iStep	Int	0	Non-retain
arStep	Array[0..30] of Bool		Non-retain
arXPos	Array[0..1] of Real		Non-retain
arYPos	Array[0..1] of Real		Non-retain
arZPos	Array[0..1] of Real		Non-retain
Arm1	"fbRobotArmCon-trol"		
Arm2	"fbRobotArmCon-trol"		
Arm3	"fbRobotArmCon-trol"		
Conveyror	"fbConveyorCon-trol"		
xHoming1	Bool	false	Non-retain
xHoming2	Bool	false	Non-retain
xHoming3	Bool	false	Non-retain
xTriggerHome	Bool	false	Non-retain
rPulse1	Real	0.0	Non-retain
rPulse2	Real	0.0	Non-retain
rPulse3	Real	0.0	Non-retain
xTrackCalcDone	Bool	false	Non-retain
xIKError	Bool	false	Non-retain
xTracking	Bool	false	Non-retain
rYOffset	Real	0.0	Non-retain
rXpos	Real	0.0	Non-retain
rYpos	Real	0.0	Non-retain
rZpos	Real	0.0	Non-retain
xInPosPulse	Bool	false	Non-retain
xInPos	R_TRIG		
xDecOn	Bool	false	Non-retain
xTriggerHome1	Bool	false	Non-retain
rXobject	Real	0.0	Non-retain
rYobject	Real	0.0	Non-retain
rZobject	Real	0.0	Non-retain
rPickTime	Real	0.0	Non-retain

Name	Data type	Default value	Retain
xInPosPulse_1	Bool	false	Non-retain
rInterpolateVel	Real	0.0	Non-retain
rDis	Real	0.0	Non-retain
xTrig1	Bool	false	Non-retain
xTrig2	Bool	false	Non-retain
xTrig3	Bool	false	Non-retain
xTrig4	Bool	false	Non-retain
▼ Temp			
rAngle1	Real		
rAngle2	Real		
rAngle3	Real		
rVel1	Real		
rVel2	Real		
rVel3	Real		
xPowerRelease	Bool		
xConveyorRun	Bool		
Constant			

Network 1: Init Auto

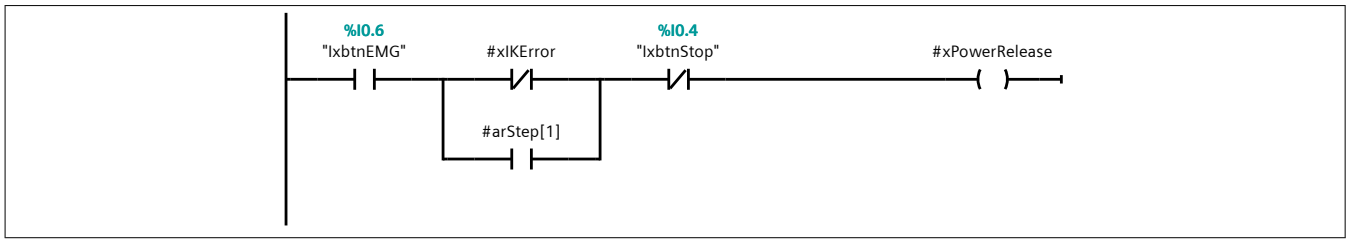

Network 2:

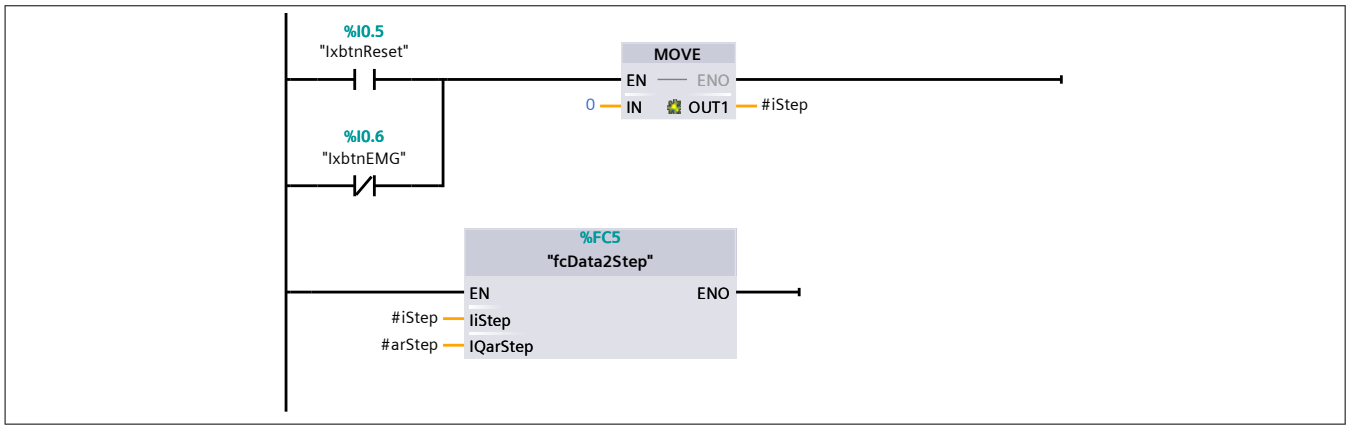

Network 3: Start Auto

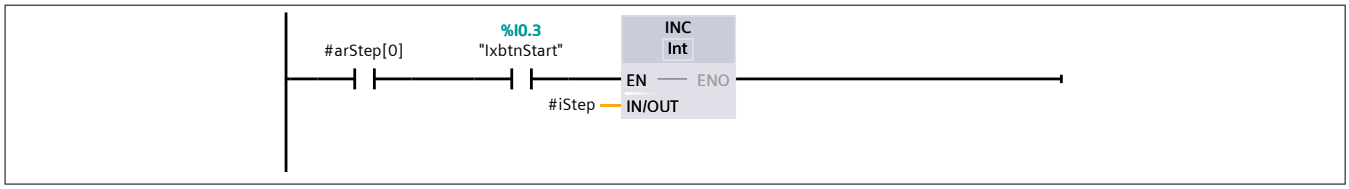

Network 4: Homing

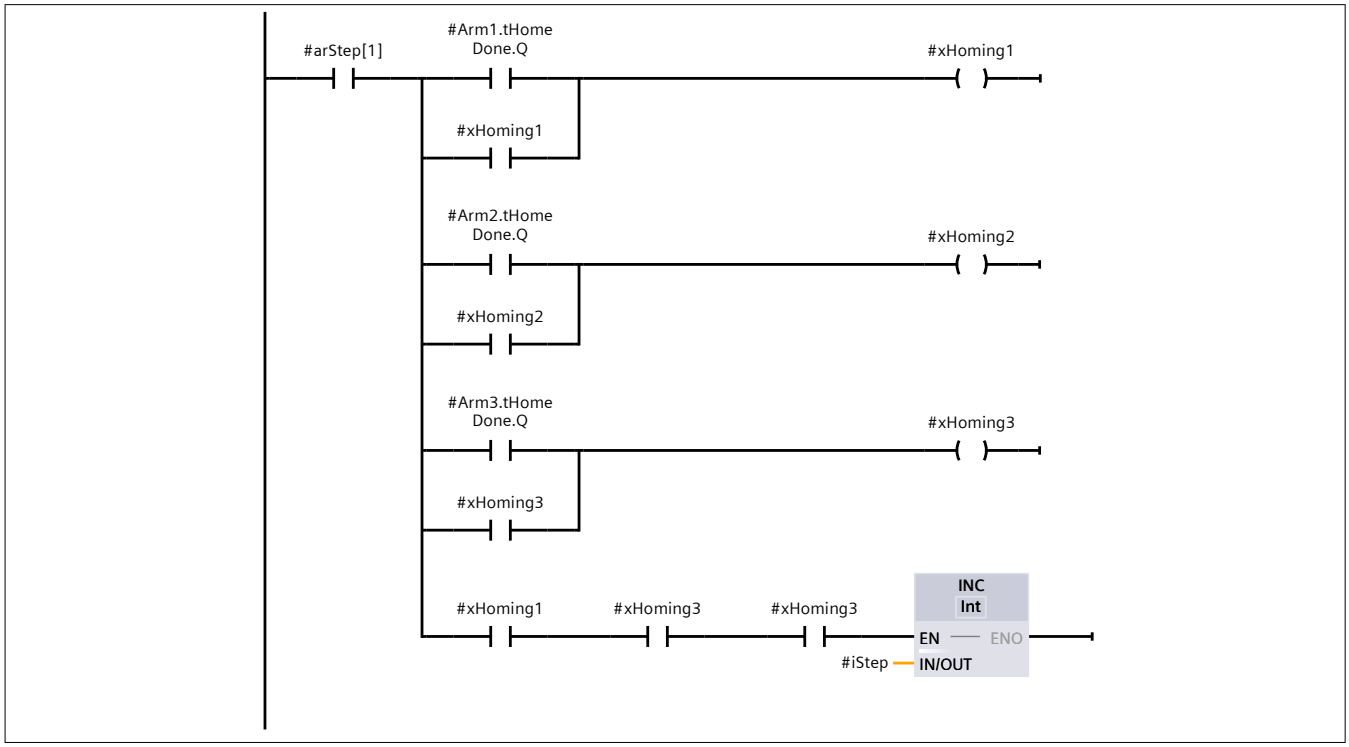

Network 5: Move to Wait Pos + Tracking Calc

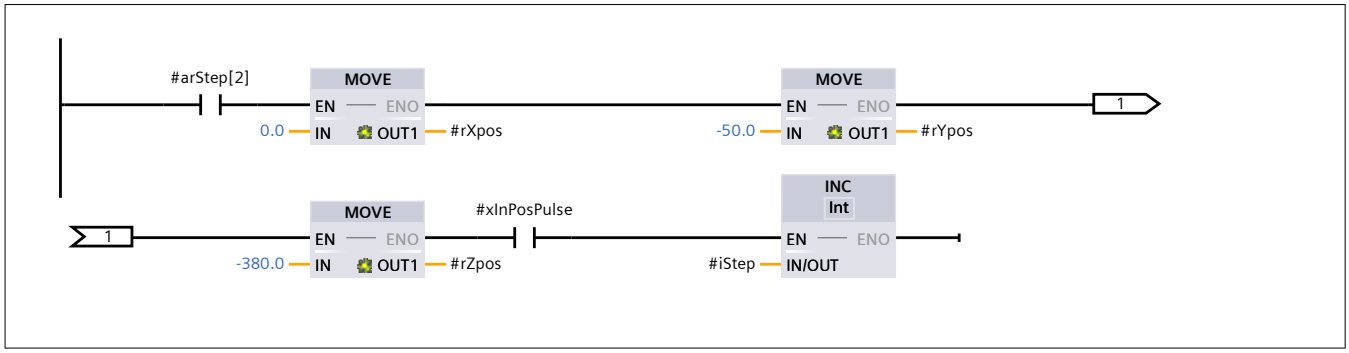

Network 6: Move to Tracking Pos

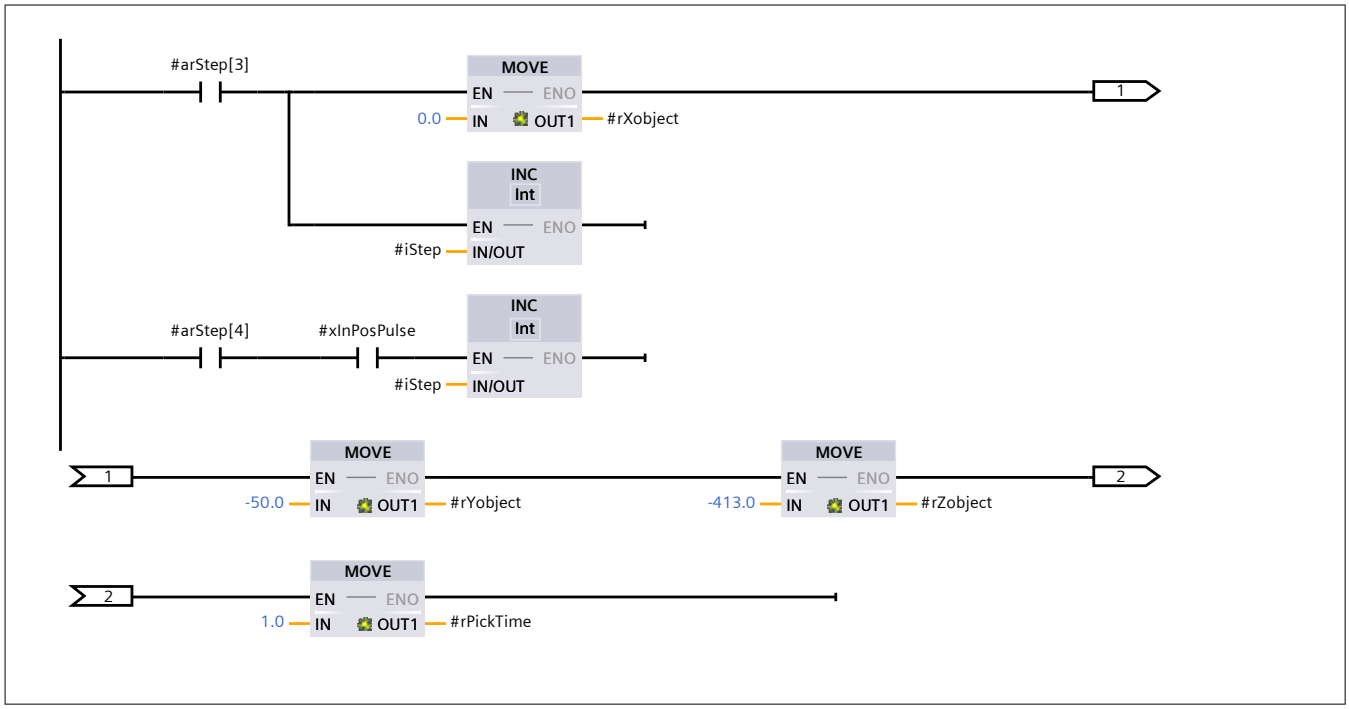

Network 7:

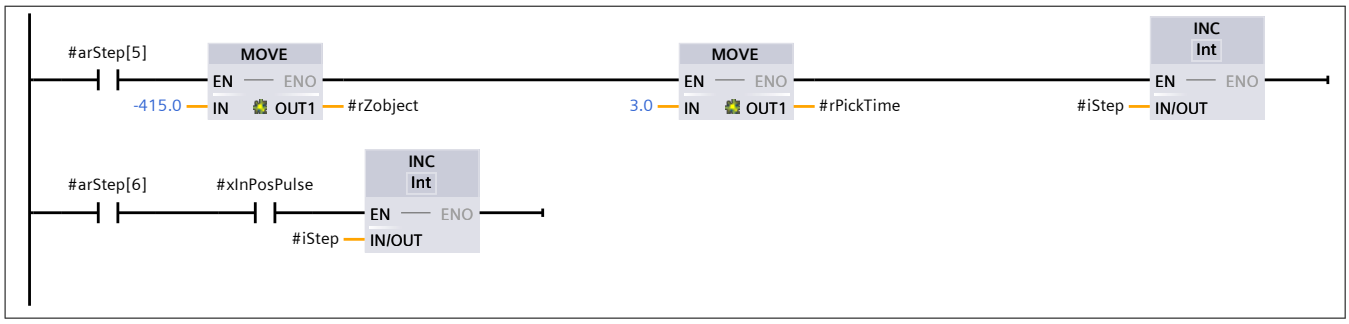

Network 8:

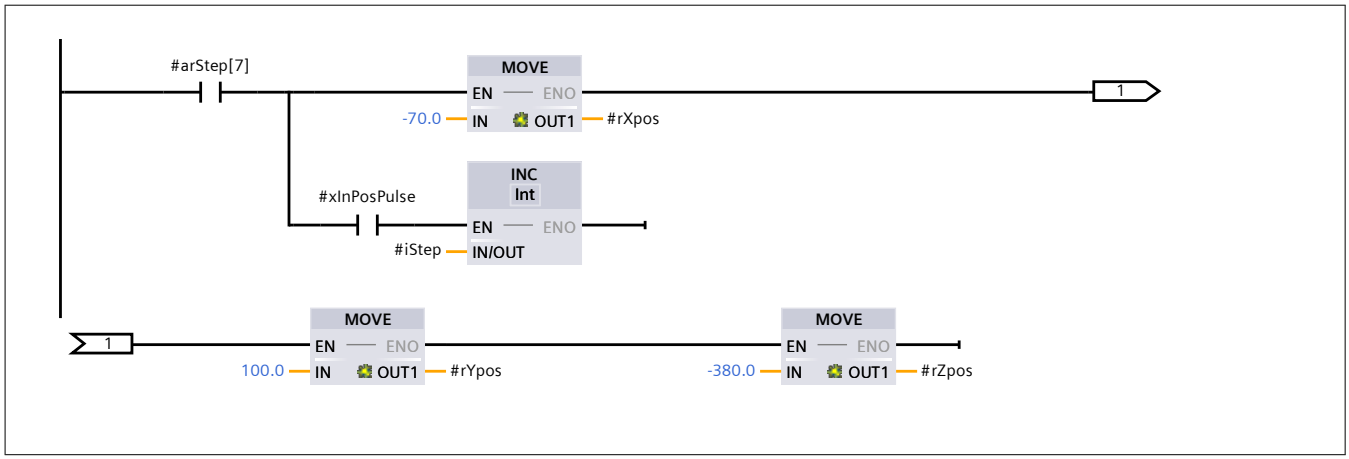

Network 9:

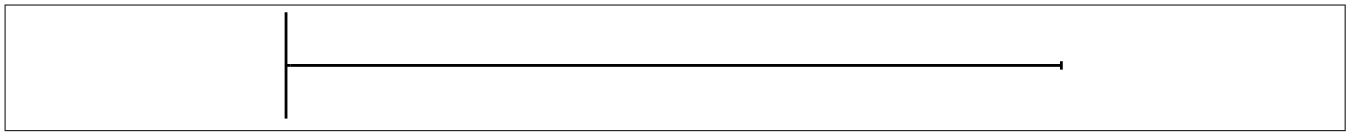

Network 10: Out Control Home

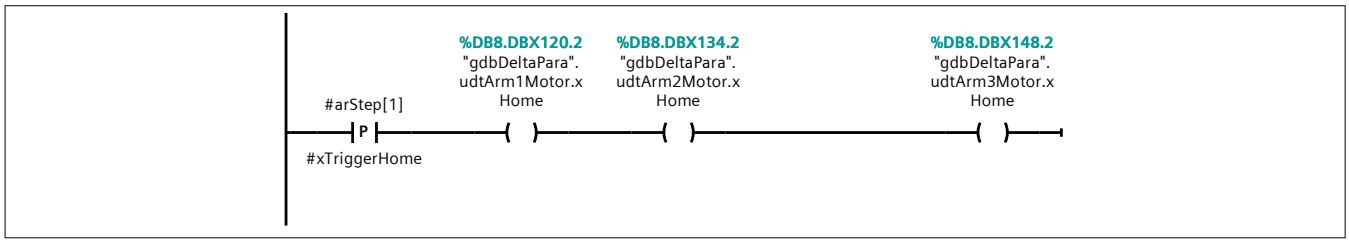

Network 11: Out Control Move Pos

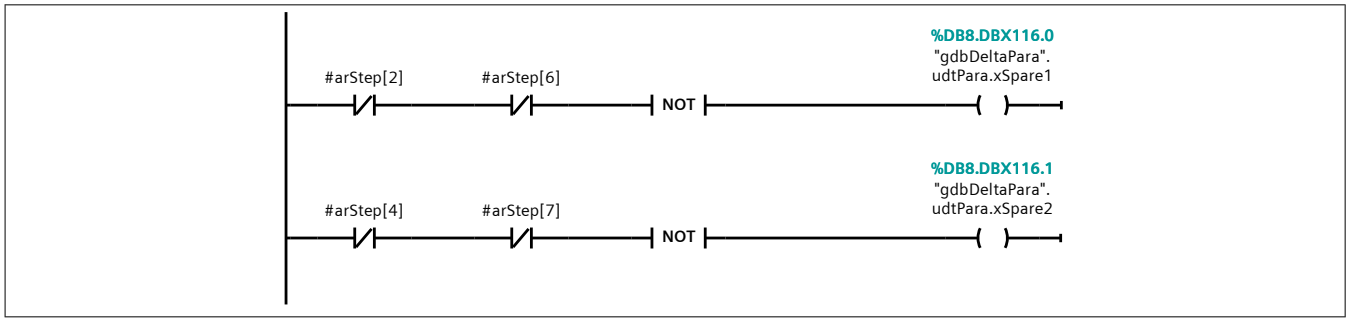

Network 12: Out Conveyor

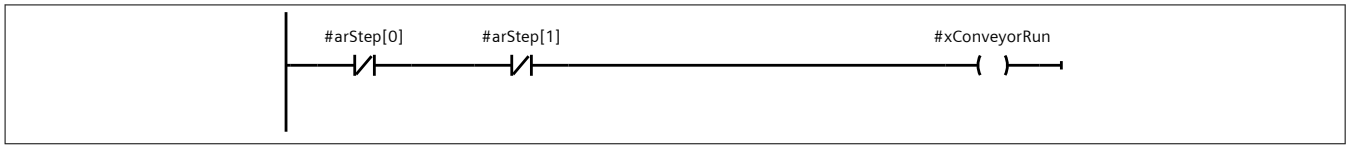

Network 13: Out Conveyor

```
0001
```

Network 14:

Network 14: (1.1 / 2.1)

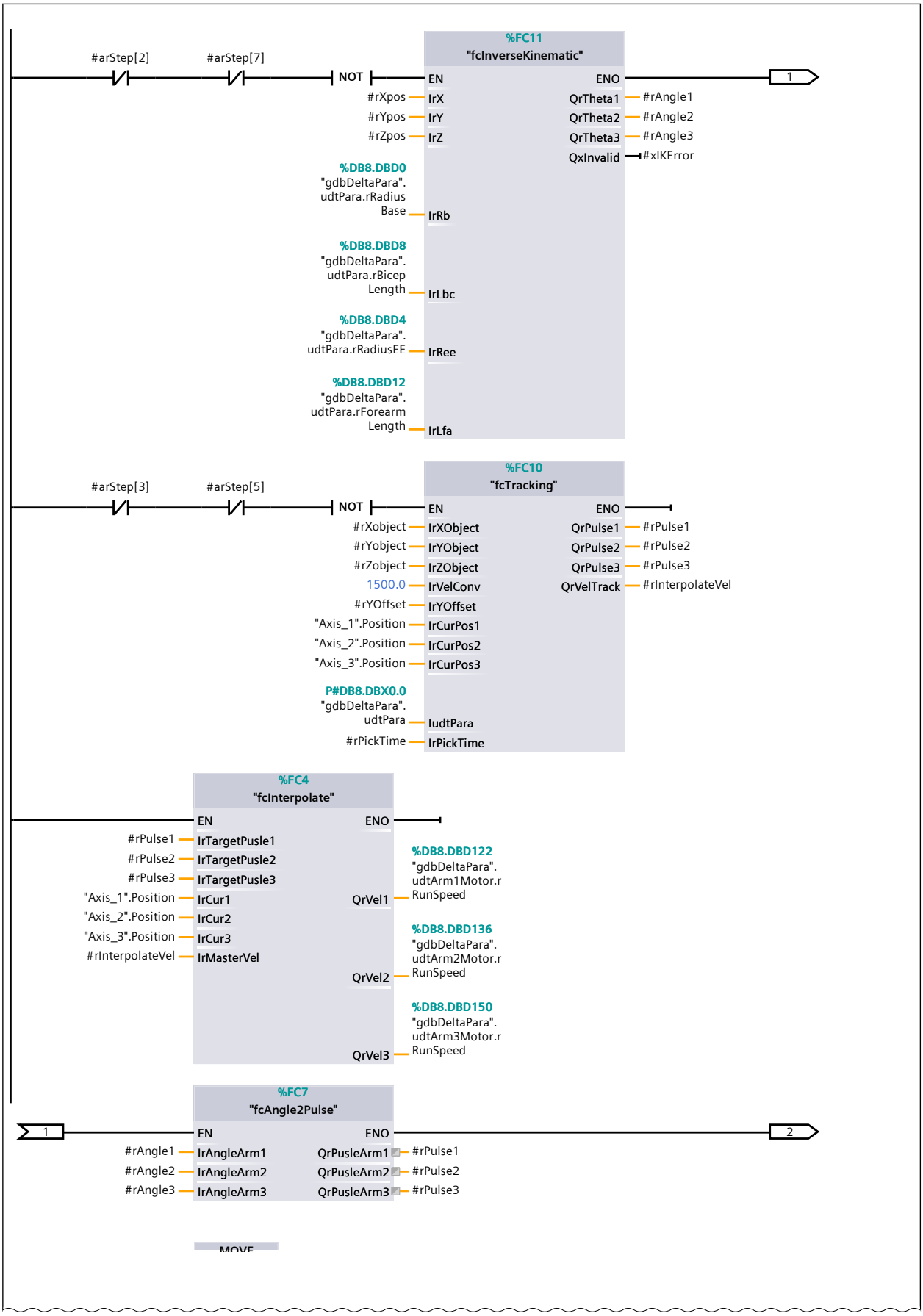

Network 14: (2.1 / 2.1)

1.1 (Page11 - 6)

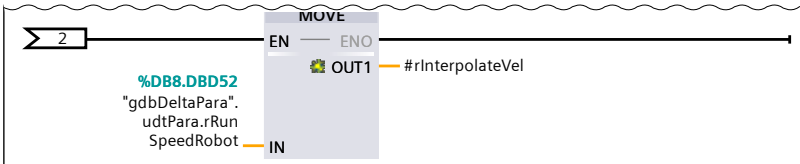

Network 15:

```
0001
```

Network 16: Tracking

Network 16: Tracking (1.1 / 2.1)

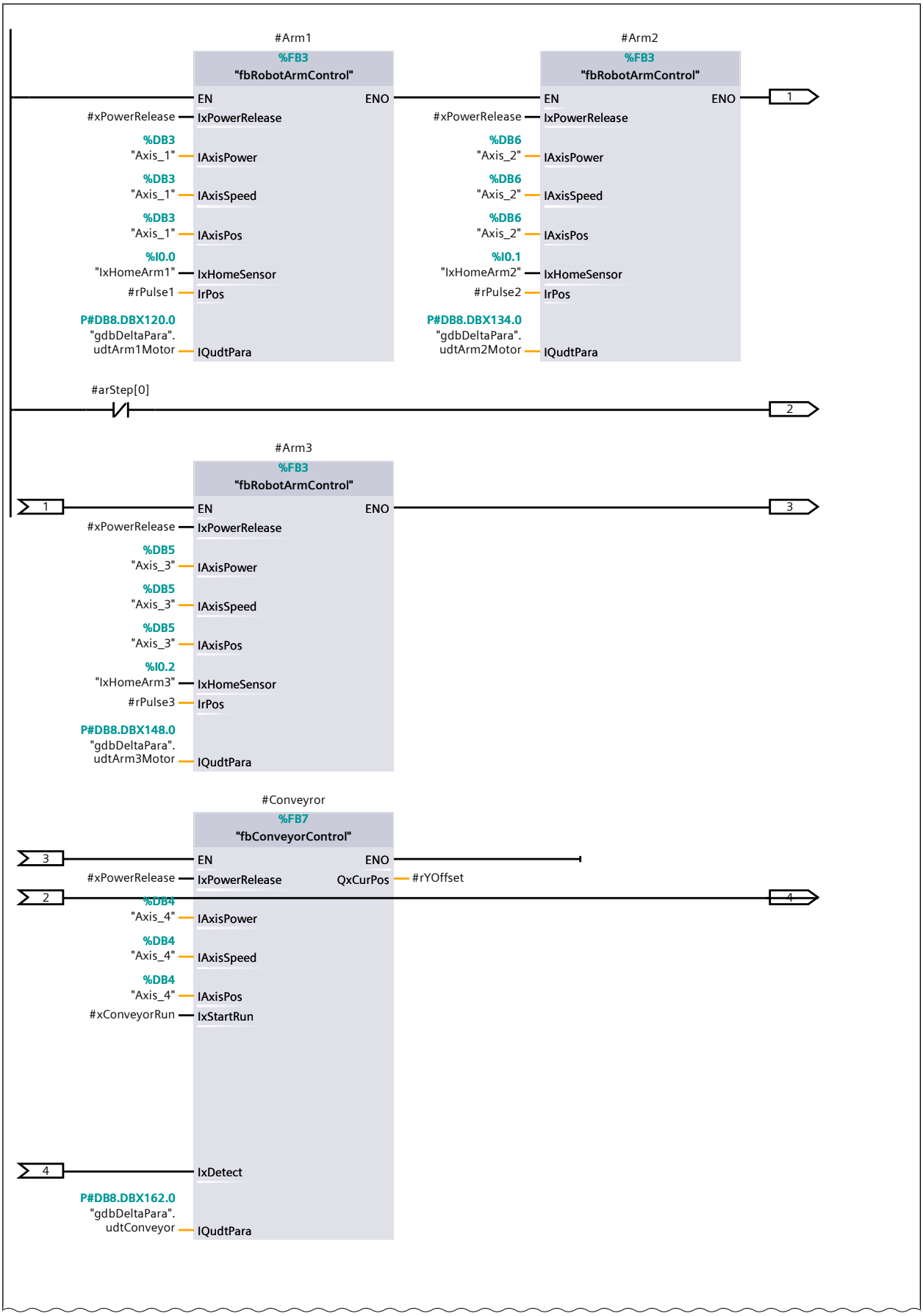

Network 16: Tracking (2.1 / 2.1)

1.1 (Page11 - 9)

Network 17:

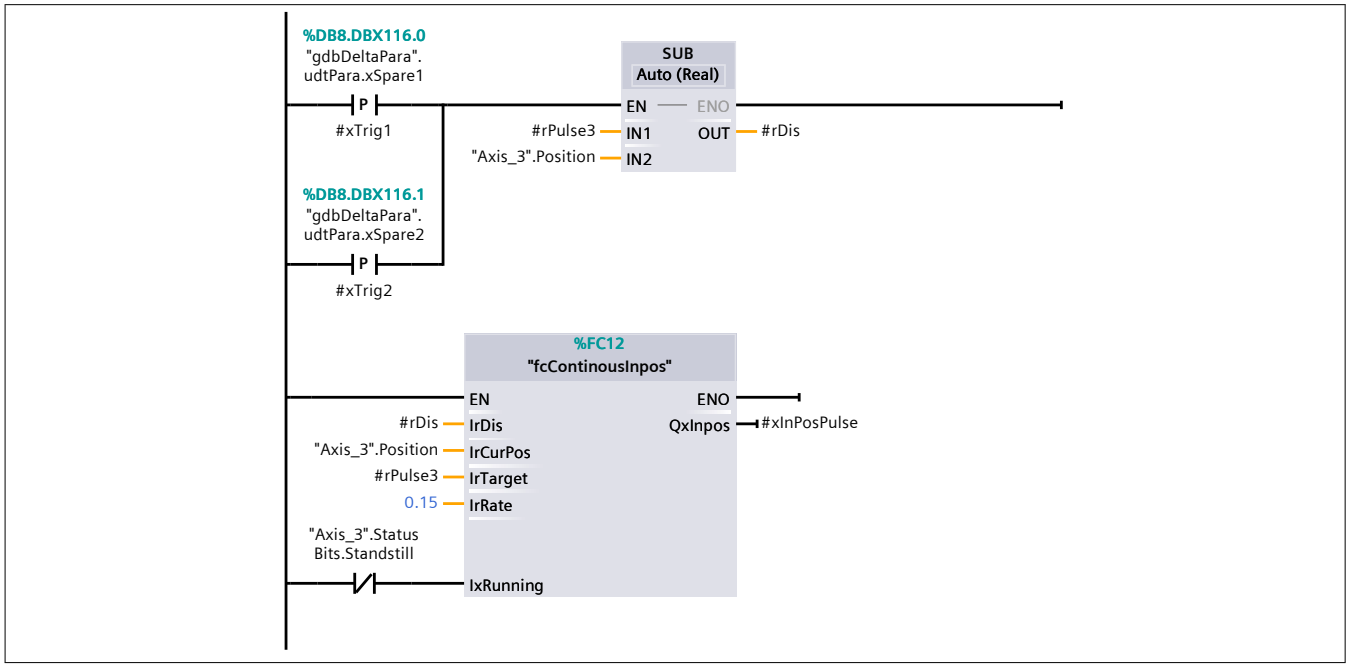
%DB8.DBX116.0
"gdbDeltaPara".
udtPara.xSpare1
P
#xTrig1
%DB8.DBX116.1
"gdbDeltaPara".
udtPara.xSpare2
P
#xTrig2
SUB
Auto (Real)
EN
ENO
#rPulse3
IN1
OUT
#rDis
"Axis_3".Position
IN2
%FC12
"fcContinousInpos"
EN
ENO
#rDis
IrDis
QxInpos
#xInPosPulse
"Axis_3".Position
IrCurPos
#rPulse3
IrTarget
0.15
IrRate
"Axis_3".Status
Bits.Standstill
IxRunning

PLC_2 [CPU 1214C DC/DC/DC] / Program blocks / Delta_Control / AutoProgram

dbAutomode [DB10]

dbAutomode Properties					
General					
Name	dbAutomode	**Number**	10	**Type**	DB
Language	DB	**Numbering**	Automatic		
Information					
Title		**Author**		**Comment**	
Family		**Version**	0.1	**User-defined ID**	

Name	Data type	Start value	Retain
Input			
Output			
InOut			
Static			
iStep	Int	0	False
arStep	Array[0..30] of Bool		False
arXPos	Array[0..1] of Real		False
arYPos	Array[0..1] of Real		False
arZPos	Array[0..1] of Real		False
Arm1	"fbRobotArmControl"		False
Arm2	"fbRobotArmControl"		False
Arm3	"fbRobotArmControl"		False
Conveyror	"fbConveyorControl"		False
xHoming1	Bool	false	False
xHoming2	Bool	false	False
xHoming3	Bool	false	False
xTriggerHome	Bool	false	False
rPulse1	Real	0.0	False
rPulse2	Real	0.0	False
rPulse3	Real	0.0	False
xTrackCalcDone	Bool	false	False
xIKError	Bool	false	False
xTracking	Bool	false	False
rYOffset	Real	0.0	False
rXpos	Real	0.0	False
rYpos	Real	0.0	False
rZpos	Real	0.0	False
xInPosPulse	Bool	false	False
xInPos	R_TRIG		False
xDecOn	Bool	false	False
xTriggerHome1	Bool	false	False
rXobject	Real	0.0	False
rYobject	Real	0.0	False
rZobject	Real	0.0	False
rPickTime	Real	0.0	False
xInPosPulse_1	Bool	false	False
rInterpolateVel	Real	0.0	False
rDis	Real	0.0	False

Name	Data type	Start value	Retain
xTrig1	Bool	false	False
xTrig2	Bool	false	False
xTrig3	Bool	false	False
xTrig4	Bool	false	False

PLC_2 [CPU 1214C DC/DC/DC] / Program blocks / Delta_Control / AutoProgram

fcTracking [FC10]

fcTracking Properties					
General					
Name	fcTracking	**Number**	10	**Type**	FC
Language	SCL	**Numbering**	Automatic		
Information					
Title		**Author**		**Comment**	
Family		**Version**	0.1	**User-defined ID**	

Name	Data type	Default value
Input		
IrXObject	Real	
IrYObject	Real	
IrZObject	Real	
IrVelConv	Real	
IrYOffset	Real	
IrCurPos1	Real	
IrCurPos2	Real	
IrCurPos3	Real	
IudtPara	"Delta"	
IrPickTime	Real	
Output		
QrPulse1	Real	
QrPulse2	Real	
QrPulse3	Real	
QrVelTrack	Real	
InOut		
Temp		
rXTracking	Real	
rYTracking	Real	
rAngle1	Real	
rAngle2	Real	
rAngle3	Real	
xIKError	Bool	
rDis1	Real	
rDis2	Real	
rDis3	Real	
rDisMax	Real	
rC	Real	
Constant		
Return		
fcTracking	Void	

```
0001 #rYTracking := #IrYObject + #IrYOffset + #IrPickTime * #IrVelConv / 58.2;
0002
0003
0004 "fcInverseKinematic"(IrX := #IrXObject,
0005            IrY := #rYTracking,
```

```
0006            IrZ := #IrZObject,
0007            IrRb := #IudtPara.rRadiusBase,
0008            IrLbc := #IudtPara.rBicepLength,
0009            IrRee := #IudtPara.rRadiusEE,
0010            IrLfa := #IudtPara.rForearmLength,
0011            QrTheta1 => #rAngle1,
0012            QrTheta2 => #rAngle2,
0013            QrTheta3 => #rAngle3,
0014            QxInvalid => #xIKError);
0015
0016 "fcAngle2Pulse"(IrAngleArm1 := #rAngle1,
0017         IrAngleArm2 := #rAngle2,
0018         IrAngleArm3 := #rAngle3,
0019         QrPusleArm1 => #QrPulse1,
0020         QrPusleArm2 => #QrPulse2,
0021         QrPusleArm3 => #QrPulse3);
0022
0023 #rDis1 := ABS_REAL(#QrPulse1 - #IrCurPos1);
0024 #rDis2 := ABS_REAL(#QrPulse2 - #IrCurPos2);
0025 #rDis3 := ABS_REAL(#QrPulse3 - #IrCurPos3);
0026
0027 #rDisMax := MAX_REAL(IN1 := #rDis1,
0028            IN2 := #rDis2,
0029            IN3 := #rDis3);
0030
0031 #QrVelTrack := #rDisMax / (#IrPickTime * 0.8);
0032
0033
0034
0035
0036
0037
0038
0039
0040
```

PLC_2 [CPU 1214C DC/DC/DC] / Program blocks / Delta_Control / AutoProgram

fcContinousInpos [FC12]

fcContinousInpos Properties					
General					
Name	fcContinousInpos	**Number**	12	**Type**	FC
Language	SCL	**Numbering**	Automatic		
Information					
Title		**Author**		**Comment**	
Family		**Version**	0.1	**User-defined ID**	

Name	Data type	Default value
Input		
IrDis	Real	
IrCurPos	Real	
IrTarget	Real	
IrRate	Real	
IxRunning	Bool	
Output		
QxInpos	Bool	
InOut		
Temp		
Constant		
Return		
fcContinousInpos	Void	

```
0001 #QxInpos := ABS_REAL(#IrCurPos - #IrTarget) <= ABS_REAL(#IrDis * #Ir-
     Rate) AND #IxRunning;
```

PLC_2 [CPU 1214C DC/DC/DC] / Program blocks / Delta_Control / Manual-Program

dbManual [DB9]

dbManual Properties					
General					
Name	dbManual	**Number**	9	**Type**	DB
Language	DB	**Numbering**	Automatic		
Information					
Title		**Author**		**Comment**	
Family		**Version**	0.1	**User-defined ID**	

Name	Data type	Start value	Retain
Input			
IxPowerRelease	Bool	false	False
Output			
InOut			
IQudtPara	"Delta"		False
IQudtArm1	"SingleMotor"		False
IQudtArm2	"SingleMotor"		False
IQudtArm3	"SingleMotor"		False
IQudtConv	"SingleMotor"		False
Static			
fbRobotArmControl1	"fbRobotArmControl"		False
fbRobotArmControl2	"fbRobotArmControl"		False
fbRobotArmControl3	"fbRobotArmControl"		False
fbConveyorControl	"fbConveyorControl"		False
rConveyorCurPos	Real	0.0	False

PLC_2 [CPU 1214C DC/DC/DC] / Program blocks / Delta_Control / Manual-Program

fbManualMode [FB9]

fbManualMode Properties					
General					
Name	fbManualMode	**Number**	9	**Type**	FB
Language	LAD	**Numbering**	Automatic		
Information					
Title		**Author**		**Comment**	
Family		**Version**	0.1	**User-defined ID**	

Name	Data type	Default value	Retain
Input			
IxPowerRelease	Bool	false	Non-retain
Output			
InOut			
IQudtPara	"Delta"		
IQudtArm1	"SingleMotor"		
IQudtArm2	"SingleMotor"		
IQudtArm3	"SingleMotor"		
IQudtConv	"SingleMotor"		
Static			
fbRobotArmControl1	"fbRobotArmCon-trol"		
fbRobotArmControl2	"fbRobotArmCon-trol"		
fbRobotArmControl3	"fbRobotArmCon-trol"		
fbConveyorControl	"fbConveyorCon-trol"		
rConveyorCurPos	Real	0.0	Non-retain
Temp			
rPulseTarget1	Real		
rPulseTarget2	Real		
rPulseTarget3	Real		
xIKError	Bool		
Constant			

Network 1: Inverse Kinematic Calculate

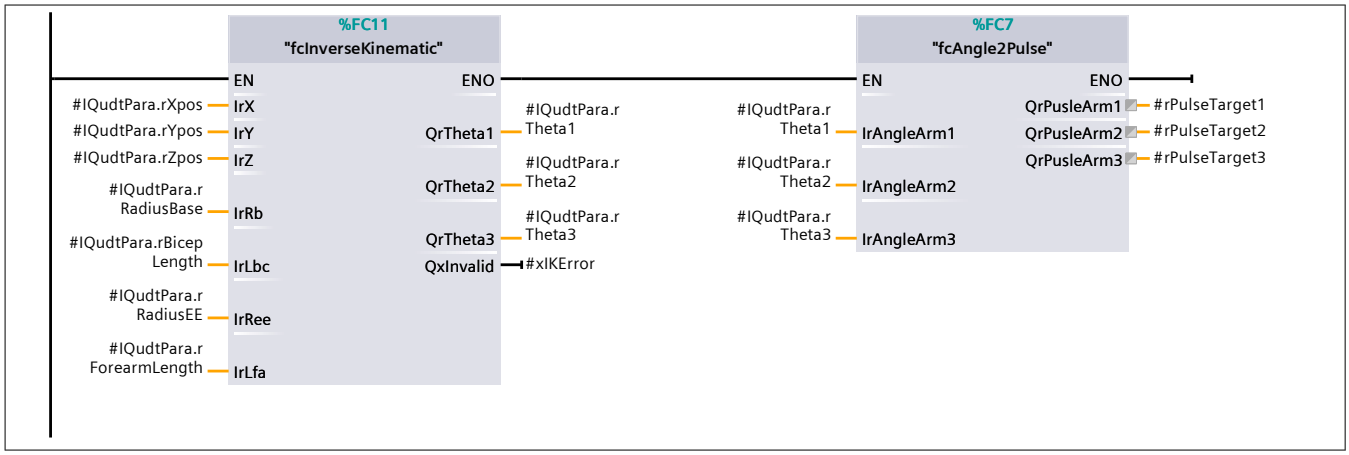

Network 2: Interpolate Calculate

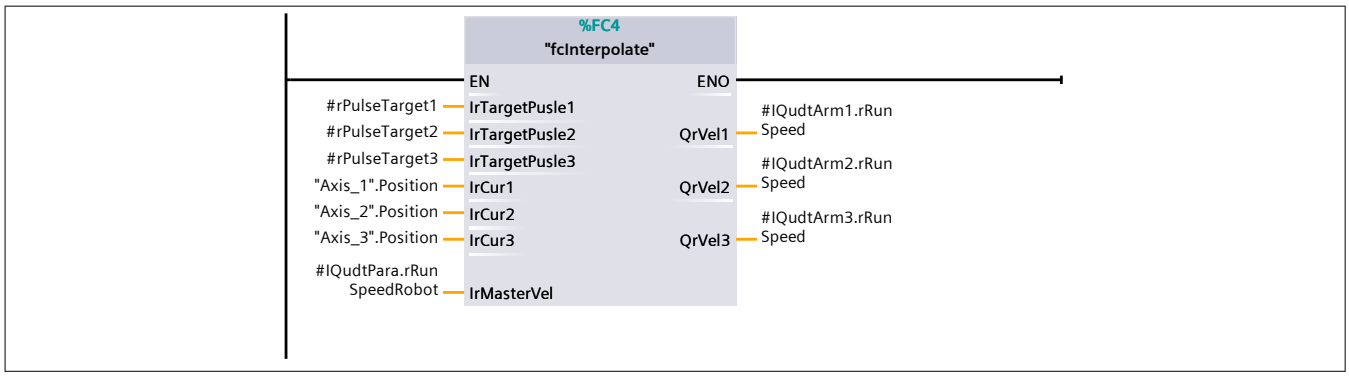

Network 3:

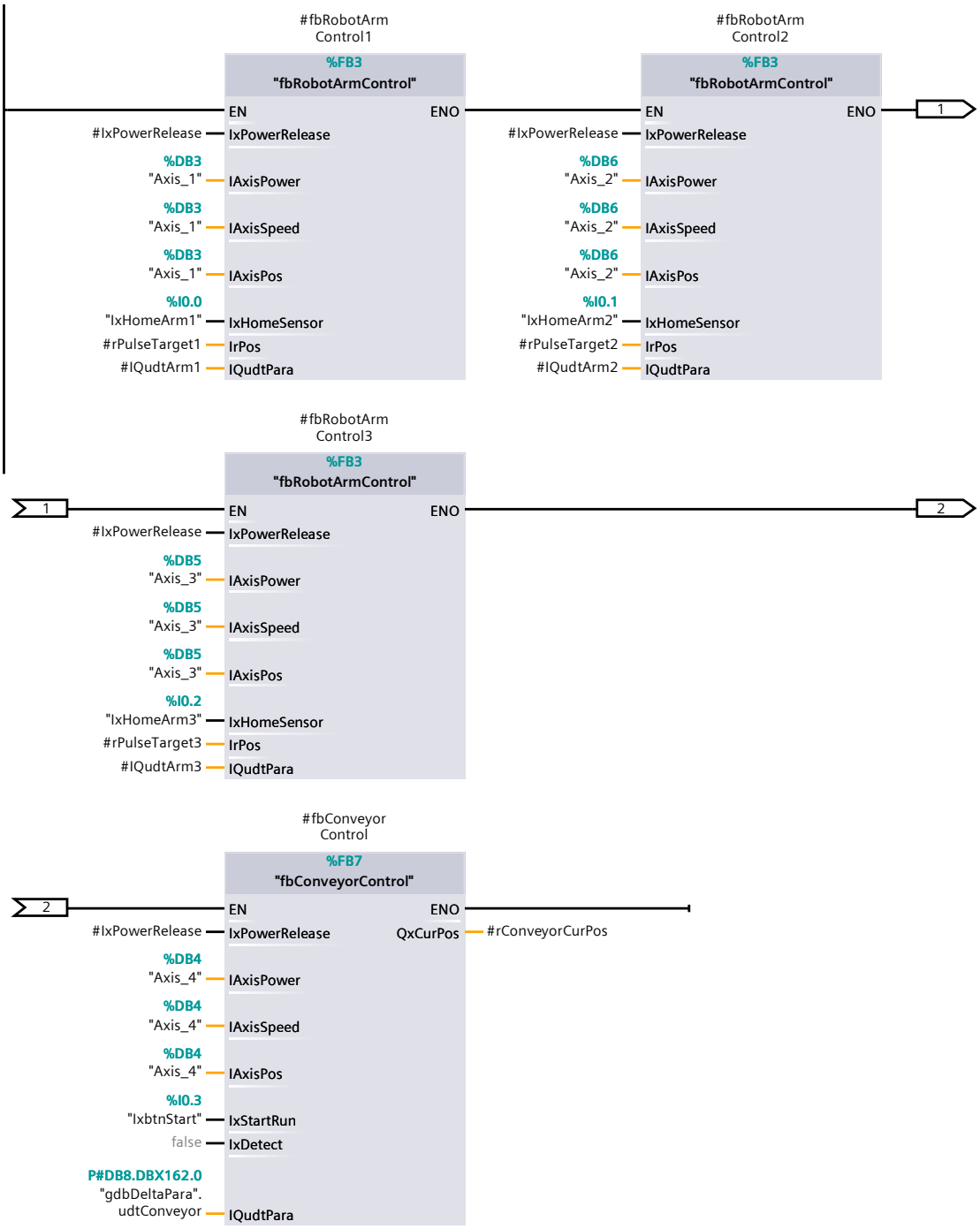
#fbRobotArm
Control1
%FB3
"fbRobotArmControl"
EN
ENO
#IxPowerRelease
IxPowerRelease
%DB3
"Axis_1"
IAxisPower
%DB3
"Axis_1"
IAxisSpeed
%DB3
"Axis_1"
IAxisPos
%I0.0
"IxHomeArm1"
IxHomeSensor
#rPulseTarget1
IrPos
#IQudtArm1
IQudtPara
#fbRobotArm
Control2
%FB3
"fbRobotArmControl"
EN
ENO
1
#IxPowerRelease
IxPowerRelease
%DB6
"Axis_2"
IAxisPower
%DB6
"Axis_2"
IAxisSpeed
%DB6
"Axis_2"
IAxisPos
%I0.1
"IxHomeArm2"
IxHomeSensor
#rPulseTarget2
IrPos
#IQudtArm2
IQudtPara
#fbRobotArm
Control3
%FB3
"fbRobotArmControl"
1
EN
ENO
2
#IxPowerRelease
IxPowerRelease
%DB5
"Axis_3"
IAxisPower
%DB5
"Axis_3"
IAxisSpeed
%DB5
"Axis_3"
IAxisPos
%I0.2
"IxHomeArm3"
IxHomeSensor
#rPulseTarget3
IrPos
#IQudtArm3
IQudtPara
#fbConveyor
Control
%FB7
"fbConveyorControl"
2
EN
ENO
#IxPowerRelease
IxPowerRelease
QxCurPos
#rConveyorCurPos
%DB4
"Axis_4"
IAxisPower
%DB4
"Axis_4"
IAxisSpeed
%DB4
"Axis_4"
IAxisPos
%I0.3
"IxbtnStart"
IxStartRun
false
IxDetect
P#DB8.DBX162.0
"gdbDeltaPara".
udtConveyor
IQudtPara

PLC_2 [CPU 1214C DC/DC/DC] / Program blocks / Delta_Control / Library

fcInterpolate [FC4]

fcInterpolate Properties					
General					
Name	fcInterpolate	**Number**	4	**Type**	FC
Language	SCL	**Numbering**	Automatic		
Information					
Title		**Author**		**Comment**	
Family		**Version**	0.1	**User-defined ID**	

Name	Data type	Default value
Input		
IrTargetPusle1	Real	
IrTargetPusle2	Real	
IrTargetPusle3	Real	
IrCur1	Real	
IrCur2	Real	
IrCur3	Real	
IrMasterVel	Real	
Output		
QrVel1	Real	
QrVel2	Real	
QrVel3	Real	
InOut		
Temp		
rDisMax	Real	
rDis1	Real	
rDis2	Real	
rDis3	Real	
arVel	Array[0..3] of Real	
arDis	Array[0..3] of Real	
Constant		
Return		
fcInterpolate	Void	

```
#rDis1 := ABS_REAL (#IrTargetPusle1 - #IrCur1);
#rDis2 := ABS_REAL (#IrTargetPusle2 - #IrCur2);
#rDis3 := ABS_REAL (#IrTargetPusle3 - #IrCur3);

#rDisMax := MAX_REAL(IN1 := #rDis1,
            IN2 := #rDis2,
            IN3 := #rDis3);
IF #rDisMax <> 0 THEN
  #QrVel1 := #IrMasterVel * #rDis1 / #rDisMax;
  #QrVel2 := #IrMasterVel * #rDis2 / #rDisMax;
  #QrVel3 := #IrMasterVel * #rDis3 / #rDisMax;
ELSE
  #QrVel1 := 50;
  #QrVel2 := 50;
  #QrVel3 := 50;
END_IF;
```

PLC_2 [CPU 1214C DC/DC/DC] / Program blocks / Delta_Control / Library

fbContinuous_Moving [FB4]

fbContinuous_Moving Properties					
General					
Name	fbContinuous_Moving	**Number**	4	**Type**	FB
Language	LAD	**Numbering**	Automatic		
Information					
Title		**Author**		**Comment**	
Family		**Version**	0.1	**User-defined ID**	

Name	Data type	Default value	Retain
Input			
Output			
InOut			
Static			
Temp			
Constant			

PLC_2 [CPU 1214C DC/DC/DC] / Program blocks / Delta_Control / Library

fbConveyorControl [FB7]

fbConveyorControl Properties					
General					
Name	fbConveyorControl	**Number**	7	**Type**	FB
Language	LAD	**Numbering**	Automatic		
Information					
Title		**Author**		**Comment**	
Family		**Version**	0.1	**User-defined ID**	

Name	Data type	Default value	Retain
Input			
IxPowerRelease	Bool	false	Non-retain
IAxisPower	TO_Axis		
IAxisSpeed	TO_SpeedAxis		
IAxisPos	TO_PositioningAxis		
IxStartRun	Bool	false	Non-retain
IxDetect	Bool	false	Non-retain
Output			
QxCurPos	Real	0.0	Non-retain
InOut			
IQudtPara	"SingleMotor"		
Static			
mcPower	MC_Power		
mcReset	MC_Reset		
mcHalt	MC_Halt		
mcMoveVel	MC_MoveVelocity		
mcRun	MC_MoveJog		
mcHome	MC_Home		
Temp			
Constant			

Network 1: POWER

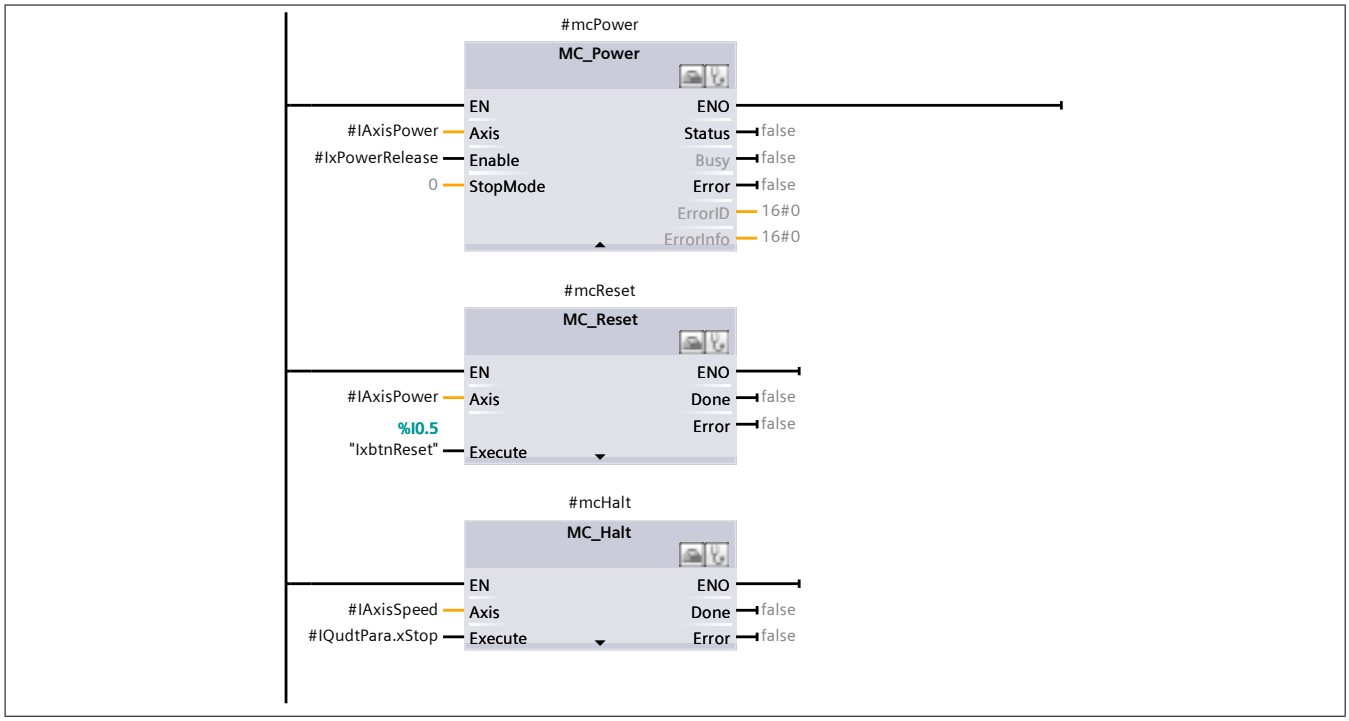

Network 2: Running

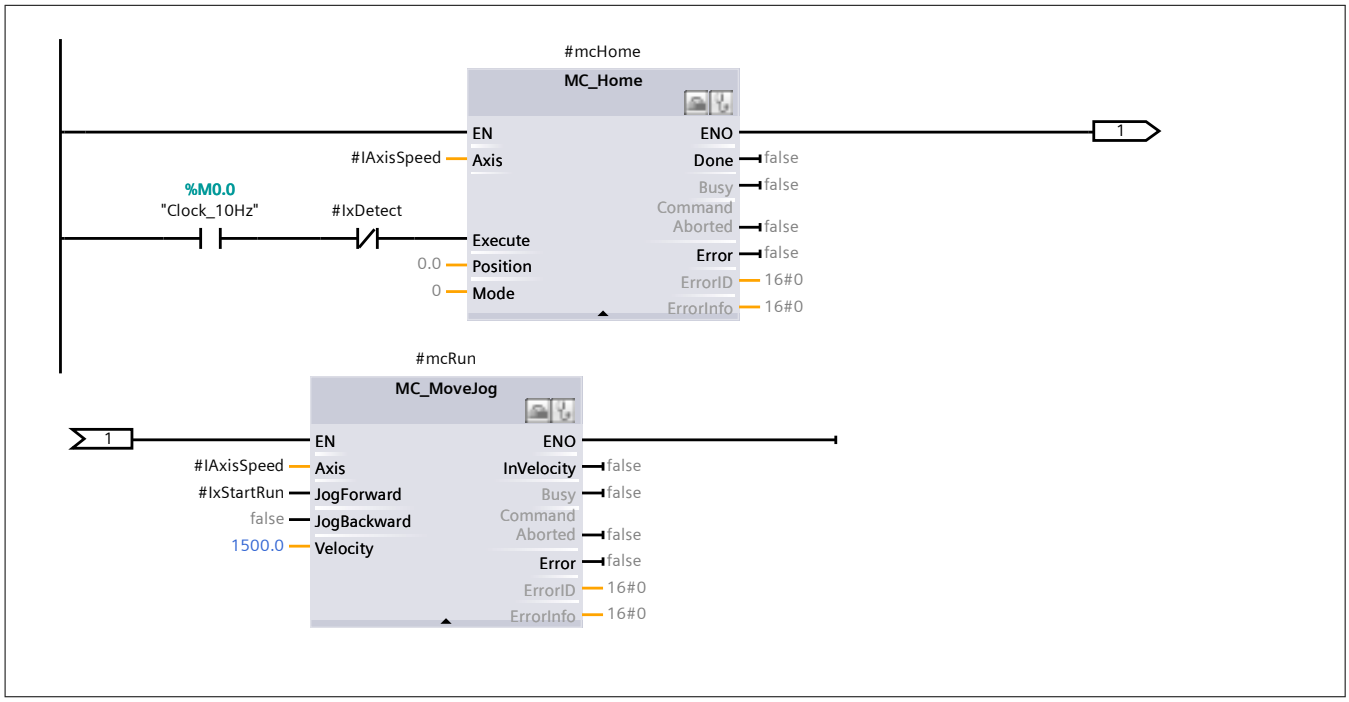

Network 3: Position Out

```
0001 #QxCurPos := #IAxisPos.Position / 58.2;
```

PLC_2 [CPU 1214C DC/DC/DC] / Program blocks / Delta_Control / Library

fbRobotArmControl [FB3]

fbRobotArmControl Properties					
General					
Name	fbRobotArmControl	**Number**	3	**Type**	FB
Language	LAD	**Numbering**	Automatic		
Information					
Title		**Author**		**Comment**	
Family		**Version**	0.1	**User-defined ID**	

Name	Data type	Default value	Retain
Input			
IxPowerRelease	Bool	false	Non-retain
IAxisPower	TO_Axis		
IAxisSpeed	TO_SpeedAxis		
IAxisPos	TO_PositioningAxis		
IxHomeSensor	Bool	false	Non-retain
IrPos	Real	0.0	Non-retain
Output			
InOut			
IQudtPara	"SingleMotor"		
Static			
mcPower	MC_Power		
mcReset	MC_Reset		
mcHalt	MC_Halt		
mcJog	MC_MoveJog		
mcAbs1	MC_MoveAbsolute		
mcAbs2	MC_MoveAbsolute		
mcHome	MC_Home		
arHomeStep	Array[0..30] of Bool		Non-retain
iStep	Int	0	Non-retain
rHomeSpeed	Real	0.0	Non-retain
rJogSpeed	Real	0.0	Non-retain
xHomeFw	Bool	false	Non-retain
xHomeBw	Bool	false	Non-retain
tHomeDone	IEC_TIMER		Non-retain
tMovePos	IEC_TIMER		Non-retain
Temp			
Constant			

Network 1: POWER

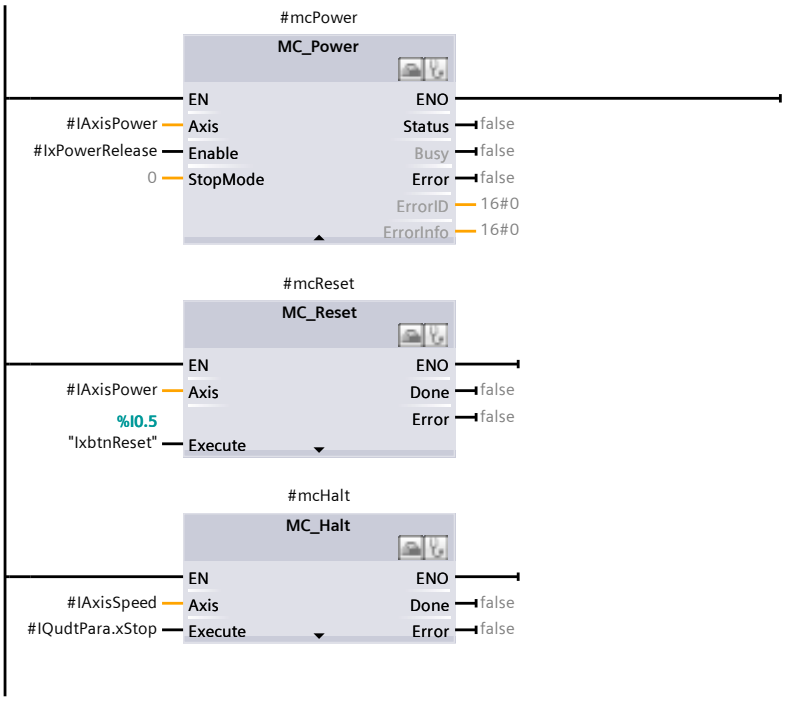

Network 2: JOG RUN

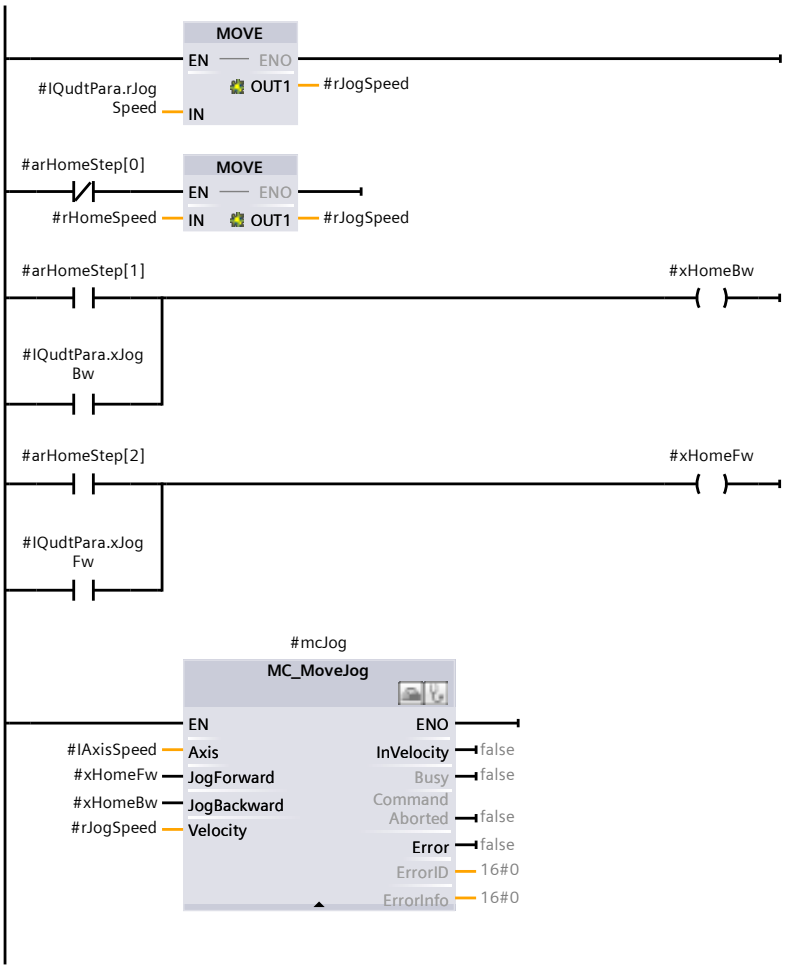

Network 3: Auto Homing

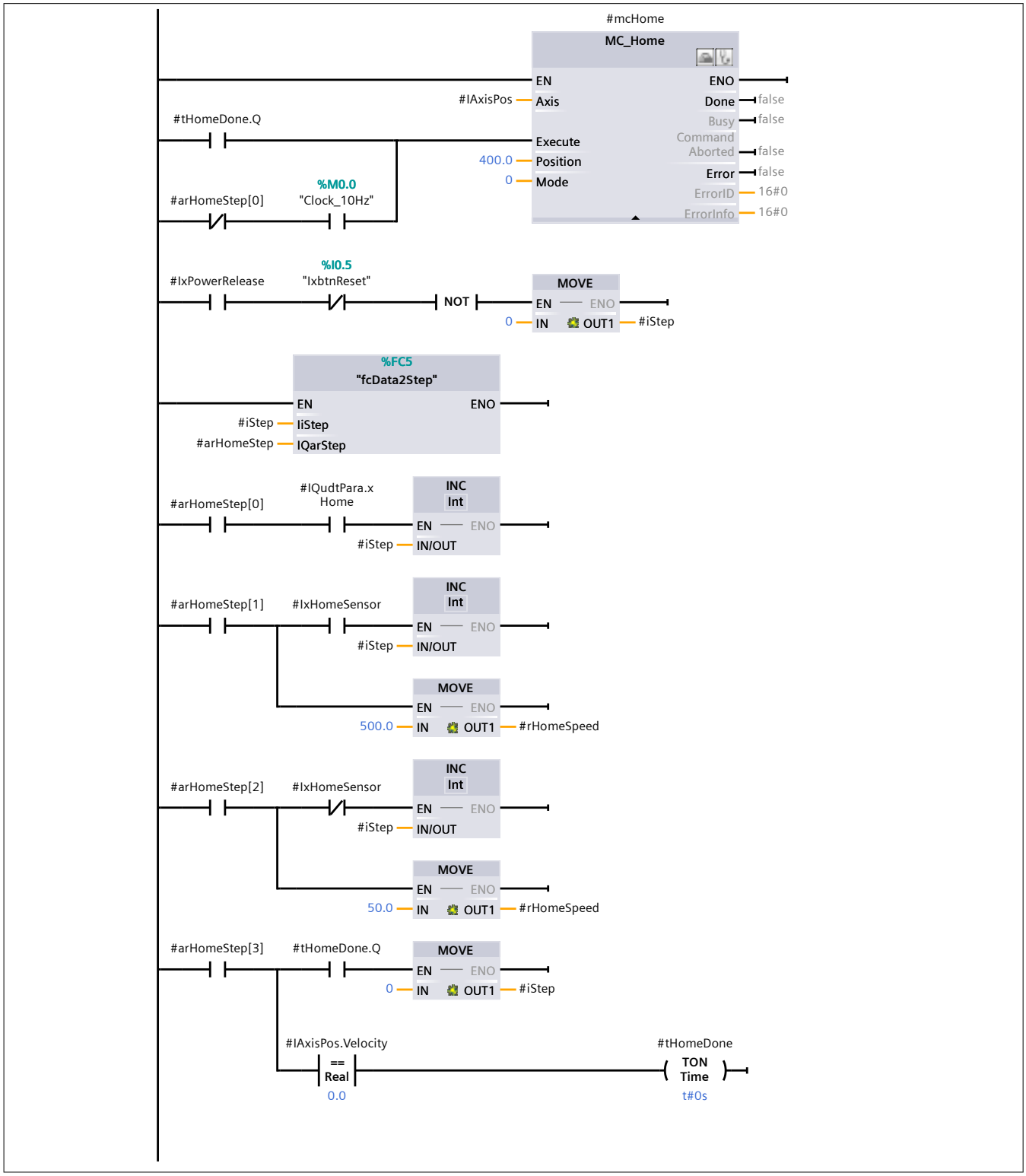

Network 4:

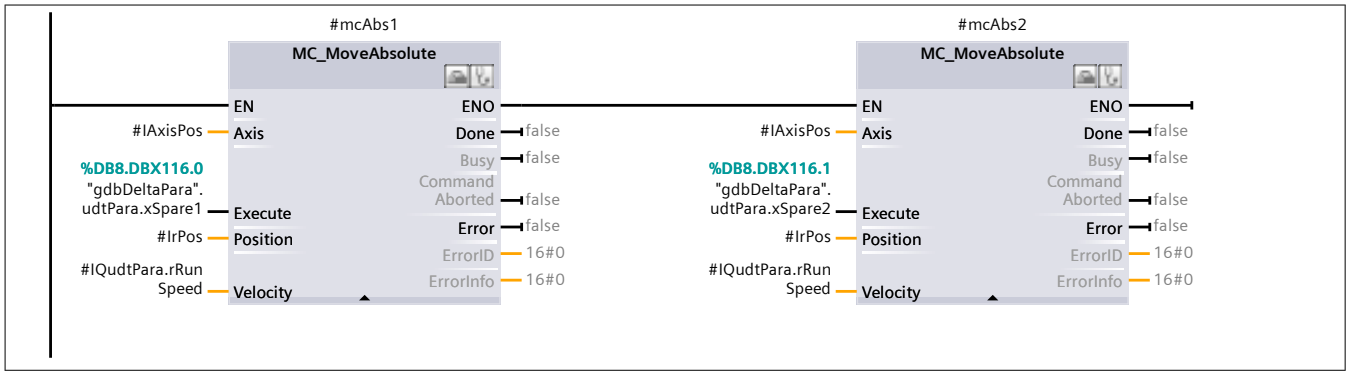
#mcAbs1
MC_MoveAbsolute
EN
ENO
#IAxisPos
Axis
Done
false
Busy
false
%DB8.DBX116.0
"gdbDeltaPara".
udtPara.xSpare1
Execute
Command
Aborted
false
Error
false
#IrPos
Position
ErrorID
16#0
#IQudtPara.rRun
Speed
Velocity
ErrorInfo
16#0
#mcAbs2
MC_MoveAbsolute
EN
ENO
#IAxisPos
Axis
Done
false
Busy
false
%DB8.DBX116.1
"gdbDeltaPara".
udtPara.xSpare2
Execute
Command
Aborted
false
Error
false
#IrPos
Position
ErrorID
16#0
#IQudtPara.rRun
Speed
Velocity
ErrorInfo
16#0

PLC_2 [CPU 1214C DC/DC/DC] / Program blocks / Delta_Control / Library

fcAngle2Pulse [FC7]

fcAngle2Pulse Properties					
General					
Name	fcAngle2Pulse	**Number**	7	**Type**	FC
Language	SCL	**Numbering**	Automatic		
Information					
Title		**Author**		**Comment**	
Family		**Version**	0.1	**User-defined ID**	

Name	Data type	Default value
Input		
IrAngleArm1	Real	
IrAngleArm2	Real	
IrAngleArm3	Real	
Output		
QrPusleArm1	Int	
QrPusleArm2	Int	
QrPusleArm3	Int	
InOut		
Temp		
Constant		
Return		
fcAngle2Pulse	Void	

```
0001 #QrPusleArm1 := REAL_TO_INT(26.6 * #IrAngleArm1);
0002
0003 #QrPusleArm2 := REAL_TO_INT(26.6 * #IrAngleArm2);
0004
0005 #QrPusleArm3 := REAL_TO_INT(26.6 * #IrAngleArm3);
```

PLC_2 [CPU 1214C DC/DC/DC] / Program blocks / Delta_Control / Library

fcPulse2Angle [FC6]

fcPulse2Angle Properties					
General					
Name	fcPulse2Angle	**Number**	6	**Type**	FC
Language	SCL	**Numbering**	Automatic		
Information					
Title		**Author**		**Comment**	
Family		**Version**	0.1	**User-defined ID**	

Name	Data type	Default value
Input		
IrPusleArm1	Int	
IrPusleArm2	Int	
IrPusleArm3	Int	
Output		
QrAngleArm1	Real	
QrAngleArm2	Real	
QrAngleArm3	Real	
InOut		
Temp		
Constant		
Return		
fcPulse2Angle	Void	

```
0001 #QrAngleArm1 := INT_TO_REAL(#IrPusleArm1) / 26.6;
0002
0003 #QrAngleArm2 := INT_TO_REAL(#IrPusleArm2) / 26.6;
0004
0005 #QrAngleArm3 := INT_TO_REAL(#IrPusleArm3) / 26.6;
0006
```

PLC_2 [CPU 1214C DC/DC/DC] / Program blocks / ComPC

gdbPC2PLC [DB1]

gdbPC2PLC Properties					
General					
Name	gdbPC2PLC	**Number**	1	**Type**	DB
Language	DB	**Numbering**	Automatic		
Information					
Title		**Author**		**Comment**	
Family		**Version**	0.1	**User-defined ID**	

Name	Data type	Start value	Retain
Static			
xBit0	Bool	false	True
xBit1	Bool	false	True
xBit2	Bool	false	True
xBit3	Bool	false	True
xBit4	Bool	false	True
xBit5	Bool	false	True
xBit6	Bool	false	True
xBit7	Bool	false	True
xBit1_0	Bool	false	True
xBit1_1	Bool	false	True
xBit1_2	Bool	false	True
xBit1_3	Bool	false	True
xBit1_4	Bool	false	True
xBit1_5	Bool	false	True
xBit1_6	Bool	false	True
xBit1_7	Bool	false	True
xBit2_0	Bool	false	True
xBit2_1	Bool	false	True
xBit2_2	Bool	false	True
xBit2_3	Bool	false	True
xBit2_4	Bool	false	True
xBit2_5	Bool	false	True
xBit2_6	Bool	false	True
xBit2_7	Bool	false	True
xBit3_0	Bool	false	True
xBit3_1	Bool	false	True
xBit3_2	Bool	false	True
xBit3_3	Bool	false	True
xBit3_4	Bool	false	True
xBit3_5	Bool	false	True
xBit3_6	Bool	false	True
xBit3_7	Bool	false	True
iData1	Int	800	True
iData2	Int	0	True
iData3	Int	0	True
iData4	Int	0	True
iData5	Int	0	True
iData6	Int	0	True

Name	Data type	Start value	Retain
iData7	Int	0	True
iData8	Int	-400	True
iData9	Int	0	True
iData10	Int	0	True
iData11	Int	0	True
iData12	Int	0	True
iData13	Int	0	True
iData14	Int	0	True
iData15	Int	0	True
iData16	Int	0	True
iData17	Int	92	True
iData18	Int	35	True
iData19	Int	165	True
iData20	Int	354	True
iData21	Int	0	True
iData22	Int	0	True
iData23	Int	0	True
iData24	Int	0	True
iData25	Int	0	True
iData26	Int	0	True
iData27	Int	0	True
iData28	Int	0	True
iData29	Int	0	True
iData30	Int	0	True
iData31	Int	0	True
iData32	Int	0	True
iData33	Int	0	True
iData34	Int	0	True
iData35	Int	0	True
iData36	Int	0	True
iData37	Int	0	True
iData38	Int	0	True
iData39	Int	0	True
iData40	Int	0	True

PLC_2 [CPU 1214C DC/DC/DC] / Program blocks / ComPC

gdbPLC2PC [DB2]

gdbPLC2PC Properties					
General					
Name	gdbPLC2PC	**Number**	2	**Type**	DB
Language	DB	**Numbering**	Automatic		
Information					
Title		**Author**		**Comment**	
Family		**Version**	0.1	**User-defined ID**	

Name	Data type	Start value	Retain
Static			
xBit0	Bool	false	True
xBit1	Bool	false	True
xBit2	Bool	false	True
xBit3	Bool	false	True
xBit4	Bool	false	True
xBit5	Bool	false	True
xBit6	Bool	false	True
xBit7	Bool	false	True
xBit1_0	Bool	false	True
xBit1_1	Bool	false	True
xBit1_2	Bool	false	True
xBit1_3	Bool	false	True
xBit1_4	Bool	false	True
xBit1_5	Bool	false	True
xBit1_6	Bool	false	True
xBit1_7	Bool	false	True
xBit2_0	Bool	false	True
xBit2_1	Bool	false	True
xBit2_2	Bool	false	True
xBit2_3	Bool	false	True
xBit2_4	Bool	false	True
xBit2_5	Bool	false	True
xBit2_6	Bool	false	True
xBit2_7	Bool	false	True
xBit3_0	Bool	false	True
xBit3_1	Bool	false	True
xBit3_2	Bool	false	True
xBit3_3	Bool	false	True
xBit3_4	Bool	false	True
xBit3_5	Bool	false	True
xBit3_6	Bool	false	True
xBit3_7	Bool	false	True
iData1	Int	0	True
iData2	Int	0	True
iData3	Int	0	True
iData4	Int	0	True
iData5	Int	0	True
iData6	Int	0	True

Name	Data type	Start value	Retain
iData7	Int	0	True
iData8	Int	0	True
iData9	Int	0	True
iData10	Int	0	True
iData11	Int	0	True
iData12	Int	0	True
iData13	Int	0	True
iData14	Int	0	True
iData15	Int	0	True
iData16	Int	0	True
iData17	Int	0	True
iData18	Int	0	True
iData19	Int	0	True
iData20	Int	0	True
iData21	Int	0	True
iData22	Int	0	True
iData23	Int	0	True
iData24	Int	0	True
iData25	Int	0	True
iData26	Int	0	True
iData27	Int	0	True
iData28	Int	0	True
iData29	Int	0	True
iData30	Int	0	True
iData31	Int	0	True
iData32	Int	0	True
iData33	Int	0	True
iData34	Int	0	True
iData35	Int	0	True
iData36	Int	0	True
iData37	Int	0	True
iData38	Int	0	True
iData39	Int	0	True
iData40	Int	0	True

PLC_2 [CPU 1214C DC/DC/DC] / Program blocks / ComPC

fcPC2PLC [FC8]

fcPC2PLC Properties					
General					
Name	fcPC2PLC	**Number**	8	**Type**	FC
Language	SCL	**Numbering**	Automatic		
Information					
Title		**Author**		**Comment**	
Family		**Version**	0.1	**User-defined ID**	

Name	Data type	Default value
Input		
Output		
InOut		
Temp		
Constant		
Return		
fcPC2PLC	Void	

```
0001 //Arm1
0002 //Bit
0003 "gdbDeltaPara".udtArm1Motor.xJogFw := "gdbPC2PLC".xBit0;
0004 "gdbDeltaPara".udtArm1Motor.xJogBw := "gdbPC2PLC".xBit1;
0005 "gdbDeltaPara".udtArm1Motor.xHome := "gdbPC2PLC".xBit3_0;
0006 //Data
0007
0008 "gdbDeltaPara".udtArm1Motor.rRamp := "gdbPC2PLC".iData2;
0009 "gdbDeltaPara".udtArm1Motor.rJogSpeed := "gdbPC2PLC".iData3;
0010
0011 //Arm2
0012 //Bit
0013 "gdbDeltaPara".udtArm2Motor.xJogFw := "gdbPC2PLC".xBit1_0;
0014 "gdbDeltaPara".udtArm2Motor.xJogBw := "gdbPC2PLC".xBit1_1;
0015 "gdbDeltaPara".udtArm2Motor.xHome := "gdbPC2PLC".xBit3_0;
0016 //Data
0017 "gdbDeltaPara".udtArm2Motor.rRamp := "gdbPC2PLC".iData12;
0018 "gdbDeltaPara".udtArm2Motor.rJogSpeed := "gdbPC2PLC".iData13;
0019 //Arm3
0020 //Bit
0021 "gdbDeltaPara".udtArm3Motor.xJogFw := "gdbPC2PLC".xBit2_0;
0022 "gdbDeltaPara".udtArm3Motor.xJogBw := "gdbPC2PLC".xBit2_1;
0023 "gdbDeltaPara".udtArm3Motor.xHome := "gdbPC2PLC".xBit3_0;
0024 //Data
0025 "gdbDeltaPara".udtArm3Motor.rRamp := "gdbPC2PLC".iData22;
0026 "gdbDeltaPara".udtArm3Motor.rJogSpeed := "gdbPC2PLC".iData23;
0027
0028
0029 //Robot IK
0030 //Bit
0031 "gdbDeltaPara".udtPara.xSpare1 := "gdbPC2PLC".xBit3_1;
0032 //Data
0033 //
0034 "gdbDeltaPara".udtPara.rBicepLength := "gdbPC2PLC".iData19;
0035 "gdbDeltaPara".udtPara.rForearmLength := "gdbPC2PLC".iData20;
```

```
0036 "gdbDeltaPara".udtPara.rRadiusBase := "gdbPC2PLC".iData17;
0037 "gdbDeltaPara".udtPara.rRadiusEE := "gdbPC2PLC".iData18;
0038
0039 "gdbDeltaPara".udtPara.rXpos := INT_TO_REAL("gdbPC2PLC".iData6);
0040 "gdbDeltaPara".udtPara.rYpos := INT_TO_REAL("gdbPC2PLC".iData7);
0041 "gdbDeltaPara".udtPara.rZpos := INT_TO_REAL("gdbPC2PLC".iData8);
0042
0043 "gdbDeltaPara".udtPara.rRunSpeedRobot := "gdbPC2PLC".iData1;
0044
```

PLC_2 [CPU 1214C DC/DC/DC] / Program blocks / ComPC

fcPLC2PC [FC9]

fcPLC2PC Properties					
General					
Name	fcPLC2PC	**Number**	9	**Type**	FC
Language	SCL	**Numbering**	Automatic		
Information					
Title		**Author**		**Comment**	
Family		**Version**	0.1	**User-defined ID**	

Name	Data type	Default value
Input		
Output		
InOut		
Temp		
iPosArm1	Int	
iPosArm2	Int	
iPosArm3	Int	
Constant		
Return		
fcPLC2PC	Void	

```
0001 #iPosArm1 := REAL_TO_INT("Axis_1".Position);
0002 #iPosArm2 := REAL_TO_INT("Axis_2".Position);
0003 #iPosArm3:= REAL_TO_INT("Axis_3".Position);
0004
0005 "fcPulse2Angle"(IrPusleArm1:=#iPosArm1,
0006         IrPusleArm2:=#iPosArm2,
0007         IrPusleArm3:=#iPosArm3,
0008         QrAngleArm1=>"gdbPLC2PC".iData1,
0009         QrAngleArm2=>"gdbPLC2PC".iData2,
0010         QrAngleArm3=>"gdbPLC2PC".iData3);
0011
```

PLC_2 [CPU 1214C DC/DC/DC] / Program blocks / System

fbAlarm [FB8]

fbAlarm Properties					
General					
Name	fbAlarm	**Number**	8	**Type**	FB
Language	LAD	**Numbering**	Automatic		
Information					
Title		**Author**		**Comment**	
Family		**Version**	0.1	**User-defined ID**	

Name	Data type	Default value	Retain
Input			
Output			
InOut			
Static			
Temp			
Constant			

PLC_2 [CPU 1214C DC/DC/DC] / Program blocks / System

fbPickPlace_Auto [FB5]

fbPickPlace_Auto Properties					
General					
Name	fbPickPlace_Auto	**Number**	5	**Type**	FB
Language	LAD	**Numbering**	Automatic		
Information					
Title		**Author**		**Comment**	
Family		**Version**	0.1	**User-defined ID**	

Name	Data type	Default value	Retain
Input			
Output			
InOut			
Static			
Temp			
Constant			

PLC_2 [CPU 1214C DC/DC/DC] / Program blocks / System

fbPower [FB6]

fbPower Properties					
General					
Name	fbPower	**Number**	6	**Type**	FB
Language	LAD	**Numbering**	Automatic		
Information					
Title		**Author**		**Comment**	
Family		**Version**	0.1	**User-defined ID**	

Name	Data type	Default value	Retain
Input			
Output			
InOut			
Static			
Temp			
Constant			

PLC_2 [CPU 1214C DC/DC/DC] / Program blocks / System blocks / Program resources

MC_Power_1 [FB1107]

MC_Power_1 Properties					
General					
Name	MC_Power_1	**Number**	1107	**Type**	FB
Language	SCL	**Numbering**	Automatic		
Information					
Title		**Author**	SIMATIC	**Comment**	
Family	BasicMC	**Version**	4.0	**User-defined ID**	MC_Power

Name	Data type	Default value	Retain
Input			
Axis	TO_Axis		
Enable	Bool	false	Non-retain
StopMode	Int	0	Non-retain
Output			
Status	Bool	false	Non-retain
Busy	Bool	false	Non-retain
Error	Bool	false	Non-retain
ErrorID	Word	16#0	Non-retain
ErrorInfo	Word	16#0	Non-retain
InOut			
Static			
FB_ID	DInt	0	Non-retain

PLC_2 [CPU 1214C DC/DC/DC] / Program blocks / System blocks / Program resources

MC_Reset [FB1108]

MC_Reset Properties					
General					
Name	MC_Reset	**Number**	1108	**Type**	FB
Language	SCL	**Numbering**	Automatic		
Information					
Title		**Author**	SIMATIC	**Comment**	
Family	BasicMC	**Version**	4.0	**User-defined ID**	MC_Reset

Name	Data type	Default value	Retain
Input			
Axis	TO_Axis		
Execute	Bool	false	Non-retain
Restart	Bool	false	Non-retain
Output			
Done	Bool	false	Non-retain
Busy	Bool	false	Non-retain
Error	Bool	false	Non-retain
ErrorID	Word	16#0	Non-retain
ErrorInfo	Word	16#0	Non-retain
InOut			
Static			
FB_ID	DInt	0	Non-retain

PLC_2 [CPU 1214C DC/DC/DC] / Program blocks / System blocks / Program resources

MC_Halt [FB1100]

MC_Halt Properties					
General					
Name	MC_Halt	**Number**	1100	**Type**	FB
Language	SCL	**Numbering**	Automatic		
Information					
Title		**Author**	SIMATIC	**Comment**	
Family	BasicMC	**Version**	4.0	**User-defined ID**	MC_Halt

Name	Data type	Default value	Retain
Input			
Axis	TO_SpeedAxis		
Execute	Bool	false	Non-retain
Output			
Done	Bool	false	Non-retain
Busy	Bool	false	Non-retain
CommandAborted	Bool	false	Non-retain
Error	Bool	false	Non-retain
ErrorID	Word	16#0	Non-retain
ErrorInfo	Word	16#0	Non-retain
InOut			
Static			
FB_ID	DInt	0	Non-retain

PLC_2 [CPU 1214C DC/DC/DC] / Program blocks / System blocks / Program resources

MC_MoveJog [FB1103]

MC_MoveJog Properties					
General					
Name	MC_MoveJog	**Number**	1103	**Type**	FB
Language	SCL	**Numbering**	Automatic		
Information					
Title		**Author**	SIMATIC	**Comment**	
Family	BasicMC	**Version**	4.0	**User-defined ID**	MC_MvJog

Name	Data type	Default value	Retain
Input			
Axis	TO_SpeedAxis		
JogForward	Bool	false	Non-retain
JogBackward	Bool	false	Non-retain
Velocity	Real	10.0	Non-retain
Output			
InVelocity	Bool	false	Non-retain
Busy	Bool	false	Non-retain
CommandAborted	Bool	false	Non-retain
Error	Bool	false	Non-retain
ErrorID	Word	16#0	Non-retain
ErrorInfo	Word	16#0	Non-retain
InOut			
Static			
FB_ID	DInt	0	Non-retain

PLC_2 [CPU 1214C DC/DC/DC] / Program blocks / System blocks / Program resources

MC_MoveAbsolute [FB1102]

MC_MoveAbsolute Properties					
General					
Name	MC_MoveAbsolute	**Number**	1102	**Type**	FB
Language	SCL	**Numbering**	Automatic		
Information					
Title		**Author**	SIMATIC	**Comment**	
Family	BasicMC	**Version**	4.0	**User-defined ID**	MC_MvAbs

Name	Data type	Default value	Retain
Input			
Axis	TO_PositioningAxis		
Execute	Bool	false	Non-retain
Position	Real	0.0	Non-retain
Velocity	Real	10.0	Non-retain
Output			
Done	Bool	false	Non-retain
Busy	Bool	false	Non-retain
CommandAborted	Bool	false	Non-retain
Error	Bool	false	Non-retain
ErrorID	Word	16#0	Non-retain
ErrorInfo	Word	16#0	Non-retain
InOut			
Static			
FB_ID	DInt	0	Non-retain

PLC_2 [CPU 1214C DC/DC/DC] / Program blocks / System blocks / Program resources

MC_Home [FB1101]

MC_Home Properties					
General					
Name	MC_Home	**Number**	1101	**Type**	FB
Language	SCL	**Numbering**	Automatic		
Information					
Title		**Author**	SIMATIC	**Comment**	
Family	BasicMC	**Version**	4.0	**User-defined ID**	MC_Home

Name	Data type	Default value	Retain
Input			
Axis	TO_Axis		
Execute	Bool	false	Non-retain
Position	Real	0.0	Non-retain
Mode	Int	0	Non-retain
Output			
Done	Bool	false	Non-retain
Busy	Bool	false	Non-retain
CommandAborted	Bool	false	Non-retain
Error	Bool	false	Non-retain
ErrorID	Word	16#0	Non-retain
ErrorInfo	Word	16#0	Non-retain
InOut			
Static			
FB_ID	DInt	0	Non-retain

PLC_2 [CPU 1214C DC/DC/DC] / Program blocks / System blocks / Program resources

MC_MoveVelocity [FB1105]

MC_MoveVelocity Properties					
General					
Name	MC_MoveVelocity	**Number**	1105	**Type**	FB
Language	SCL	**Numbering**	Automatic		
Information					
Title		**Author**	SIMATIC	**Comment**	
Family	BasicMC	**Version**	4.0	**User-defined ID**	MC_MvVel

Name	Data type	Default value	Retain
Input			
Axis	TO_SpeedAxis		
Execute	Bool	false	Non-retain
Velocity	Real	10.0	Non-retain
Direction	Int	0	Non-retain
Current	Bool	false	Non-retain
Output			
InVelocity	Bool	false	Non-retain
Busy	Bool	false	Non-retain
CommandAborted	Bool	false	Non-retain
Error	Bool	false	Non-retain
ErrorID	Word	16#0	Non-retain
ErrorInfo	Word	16#0	Non-retain
InOut			
Static			
FB_ID	DInt	0	Non-retain

PLC_2 [CPU 1214C DC/DC/DC] / Program blocks / System blocks / Program resources

R_TRIG [FB1001]

R_TRIG Properties					
General					
Name	R_TRIG	**Number**	1001	**Type**	FB
Language	SCL	**Numbering**	Automatic		
Information					
Title		**Author**	SIMATIC	**Comment**	
Family	BIT	**Version**	1.0	**User-defined ID**	R_TRIG

Name	Data type	Default value	Retain
Input			
CLK	Bool	false	Non-retain
Output			
Q	Bool	false	Non-retain
InOut			
Static			
Stat_Bit	Bool	false	Non-retain

PLC_2 [CPU 1214C DC/DC/DC] / Technology objects

Axis_1 [DB3]

Axis_1 Properties					
General					
Name	Axis_1	**Number**	3	**Type**	DB
Language	Motion_DB	**Numbering**	Automatic		
Information					
Title		**Author**	SIMATIC	**Comment**	
Family	BasicMC	**Version**	4.0	**User-defined ID**	TO_PosAx

Name	Data type	Start value	Retain
Base	TO_SpeedAxis		False
Base	TO_Axis		False
Input			
Output			
InOut			
Static			
Input			
Output			
InOut			
Static			
Position	Real	0.0	False
Velocity	Real	0.0	False
Actor	TO_Struct_Actor		False
Sensor	Array[1..1] of TO_Struct_Sensor		False
Units	TO_Struct_Units		False
Mechanics	TO_Struct_Mechanics		False
DynamicLimits	TO_Struct_DynamicLimits		False
DynamicDefaults	TO_Struct_DynamicDefaults		False
PositionLimitsSW	TO_Struct_PositionLimitsSW		False
PositionLimitsHW	TO_Struct_PositionLimitsHW		False
Homing	TO_Struct_Homing		False
StatusPositioning	TO_Struct_StatusPositioning		False
StatusBits	TO_Struct_StatusBits		False
ErrorBits	TO_Struct_ErrorBits		False
ControlPanel	TO_Struct_ControlPanel		False
Internal	Array[1..4] of TO_Struct_Internal		False

PLC_2 [CPU 1214C DC/DC/DC] / Technology objects

Axis_2 [DB6]

Axis_2 Properties					
General					
Name	Axis_2	**Number**	6	**Type**	DB
Language	Motion_DB	**Numbering**	Automatic		
Information					
Title		**Author**	SIMATIC	**Comment**	
Family	BasicMC	**Version**	4.0	**User-defined ID**	TO_PosAx

Name	Data type	Start value	Retain
▼ Base	TO_SpeedAxis		False
Base	TO_Axis		False
Input			
Output			
InOut			
Static			
Input			
Output			
InOut			
▼ Static			
Position	Real	0.0	False
Velocity	Real	0.0	False
Actor	TO_Struct_Actor		False
Sensor	Array[1..1] of TO_Struct_Sensor		False
Units	TO_Struct_Units		False
Mechanics	TO_Struct_Mechanics		False
DynamicLimits	TO_Struct_DynamicLimits		False
DynamicDefaults	TO_Struct_DynamicDefaults		False
PositionLimitsSW	TO_Struct_PositionLimitsSW		False
PositionLimitsHW	TO_Struct_PositionLimitsHW		False
Homing	TO_Struct_Homing		False
StatusPositioning	TO_Struct_StatusPositioning		False
StatusBits	TO_Struct_StatusBits		False
ErrorBits	TO_Struct_ErrorBits		False
ControlPanel	TO_Struct_ControlPanel		False
Internal	Array[1..4] of TO_Struct_Internal		False

PLC_2 [CPU 1214C DC/DC/DC] / Technology objects

Axis_3 [DB5]

Axis_3 Properties					
General					
Name	Axis_3	**Number**	5	**Type**	DB
Language	Motion_DB	**Numbering**	Automatic		
Information					
Title		**Author**	SIMATIC	**Comment**	
Family	BasicMC	**Version**	4.0	**User-defined ID**	TO_PosAx

Name	Data type	Start value	Retain
Base	TO_SpeedAxis		False
Base	TO_Axis		False
Input			
Output			
InOut			
Static			
Input			
Output			
InOut			
Static			
Position	Real	0.0	False
Velocity	Real	0.0	False
Actor	TO_Struct_Actor		False
Sensor	Array[1..1] of TO_Struct_Sensor		False
Units	TO_Struct_Units		False
Mechanics	TO_Struct_Mechanics		False
DynamicLimits	TO_Struct_DynamicLimits		False
DynamicDefaults	TO_Struct_DynamicDefaults		False
PositionLimitsSW	TO_Struct_PositionLimitsSW		False
PositionLimitsHW	TO_Struct_PositionLimitsHW		False
Homing	TO_Struct_Homing		False
StatusPositioning	TO_Struct_StatusPositioning		False
StatusBits	TO_Struct_StatusBits		False
ErrorBits	TO_Struct_ErrorBits		False
ControlPanel	TO_Struct_ControlPanel		False
Internal	Array[1..4] of TO_Struct_Internal		False

PLC_2 [CPU 1214C DC/DC/DC] / Technology objects

Axis_4 [DB4]

Axis_4 Properties					
General					
Name	Axis_4	**Number**	4	**Type**	DB
Language	Motion_DB	**Numbering**	Automatic		
Information					
Title		**Author**	SIMATIC	**Comment**	
Family	BasicMC	**Version**	4.0	**User-defined ID**	TO_PosAx

Name	Data type	Start value	Retain
Base	TO_SpeedAxis		False
Base	TO_Axis		False
Input			
Output			
InOut			
Static			
Input			
Output			
InOut			
Static			
Position	Real	0.0	False
Velocity	Real	0.0	False
Actor	TO_Struct_Actor		False
Sensor	Array[1..1] of TO_Struct_Sensor		False
Units	TO_Struct_Units		False
Mechanics	TO_Struct_Mechanics		False
DynamicLimits	TO_Struct_DynamicLimits		False
DynamicDefaults	TO_Struct_DynamicDefaults		False
PositionLimitsSW	TO_Struct_PositionLimitsSW		False
PositionLimitsHW	TO_Struct_PositionLimitsHW		False
Homing	TO_Struct_Homing		False
StatusPositioning	TO_Struct_StatusPositioning		False
StatusBits	TO_Struct_StatusBits		False
ErrorBits	TO_Struct_ErrorBits		False
ControlPanel	TO_Struct_ControlPanel		False
Internal	Array[1..4] of TO_Struct_Internal		False

PLC_2 [CPU 1214C DC/DC/DC] / PLC tags / Default tag table [95]

PLC tags

PLC tags				
	Name	Data type	Address	Retain
	IxHomeArm1	Bool	%I0.0	False
	IxHomeArm2	Bool	%I0.1	False
	IxHomeArm3	Bool	%I0.2	False
	IxbtnStart	Bool	%I0.3	False
	IxbtnStop	Bool	%I0.4	False
	IxbtnReset	Bool	%I0.5	False
	IxbtnEMG	Bool	%I0.6	False
	IxSpare1	Bool	%I0.7	False
	IxSpare2	Bool	%I1.0	False
	IxSpare3	Bool	%I1.1	False
	IxSpare4	Bool	%I1.2	False
	IxSpare5	Bool	%I1.3	False
	IxSpare6	Bool	%I1.4	False
	IxSpare7	Bool	%I1.5	False
	QxPulseArm1	Bool	%Q0.0	False
	QxPulseArm2	Bool	%Q0.1	False
	QxPulseArm3	Bool	%Q0.2	False
	QxPulseArm4	Bool	%Q0.3	False
	QxDirArm1	Bool	%Q0.4	False
	QxDirArm2	Bool	%Q0.5	False
	QxDirArm3	Bool	%Q0.6	False
	QxDirArm4	Bool	%Q0.7	False
	QxPump	Bool	%Q1.0	False
	QxConveyorEnable	Bool	%Q1.1	False
	System_Byte	Byte	%MB1	False
	FirstScan	Bool	%M1.0	False
	DiagStatusUpdate	Bool	%M1.1	False
	AlwaysTRUE	Bool	%M1.2	False
	AlwaysFALSE	Bool	%M1.3	False
	Clock_Byte	Byte	%MB0	False
	Clock_10Hz	Bool	%M0.0	False
	Clock_5Hz	Bool	%M0.1	False
	Clock_2.5Hz	Bool	%M0.2	False
	Clock_2Hz	Bool	%M0.3	False
	Clock_1.25Hz	Bool	%M0.4	False
	Clock_1Hz	Bool	%M0.5	False
	Clock_0.625Hz	Bool	%M0.6	False

	Name	Data type	Address	Retain
	Clock_0.5Hz	Bool	%M0.7	False
	Axis_1_DriveEnable	Bool	%M20.0	False
	Axis_2_DriveEnable	Bool	%M20.1	False
	Axis_4_DriveEnable	Bool	%M20.3	False
	Axis_3_DriveEnable	Bool	%M20.2	False
	Tag_1	Bool	%M200.0	False
	Tag_2	Real	%MD300	False
	Tag_3	DWord	%MD304	False
	Tag_4	Real	%MD296	False
	Tag_5	Real	%MD292	False
	Tag_6	DInt	%MD308	False
	Tag_7	Real	%MD36	False
	Tag_8	Real	%MD34	False
	Tag_9	Real	%MD60	False
	Tag_10	Real	%MD64	False
	Tag_11	Real	%MD68	False
	Tag_12	Real	%MD72	False

PLC_2 [CPU 1214C DC/DC/DC] / PLC tags / Default tag table [95]

User constants

User constants			
	Name	Data type	Value

PLC_2 [CPU 1214C DC/DC/DC] / PLC data types

Delta

Delta Properties					
General					
Name	Delta	**Number**	1	**Type**	UDT
Language		**Numbering**			
Information					
Title		**Author**		**Comment**	
Family		**Version**		**User-defined ID**	

Name	Data type	Default value
rRadiusBase	Real	0.0
rRadiusEE	Real	0.0
rBicepLength	Real	0.0
rForearmLength	Real	0.0
rTheta1	Real	0.0
rTheta2	Real	0.0
rTheta3	Real	0.0
rXpos	Real	0.0
rYpos	Real	0.0
rZpos	Real	0.0
rJogSpeedArm1	Real	0.0
rJogSpeedArm2	Real	0.0
rJogSpeedArm3	Real	0.0
rRunSpeedRobot	Real	0.0
rRunSpeedArm_	Real	0.0
rRunSpeedArm__	Real	0.0
rRamArm1	Real	0.0
rRamArm2	Real	0.0
rRamArm3	Real	0.0
rSpare1	Real	0.0
rSpare2	Real	0.0
rSpare3	Real	0.0
rSpare4	Real	0.0
rSpare5	Real	0.0
rSpare6	Real	0.0
rSpare7	Real	0.0
rSpare8	Real	0.0
rSpare9	Real	0.0
rSpare10	Real	0.0
xSpare1	Bool	false
xSpare2	Bool	false
xSpare3	Bool	false
xSpare4	Bool	false
xSpare5	Bool	false
xSpare6	Bool	false
xSpare7	Bool	false
xSpare8	Bool	false
xSpare9	Bool	false
xSpare10	Bool	false
xSpare11	Bool	false

Name	Data type	Default value
xSpare12	Bool	false
xSpare13	Bool	false
xSpare14	Bool	false
xSpare15	Bool	false
xSpare16	Bool	false
xSpare17	Bool	false
xSpare18	Bool	false
xSpare19	Bool	false
xSpare20	Bool	false

PLC_2 [CPU 1214C DC/DC/DC] / PLC data types

SingleMotor

SingleMotor Properties					
General					
Name	SingleMotor	**Number**	2	**Type**	UDT
Language		**Numbering**			
Information					
Title		**Author**		**Comment**	
Family		**Version**		**User-defined ID**	

Name	Data type	Default value
xJogFw	Bool	false
xJogBw	Bool	false
xHome	Bool	false
xStop	Bool	false
xAbsMove	Bool	false
xReset	Bool	false
rRunSpeed	Real	0.0
rRamp	Real	0.0
rJogSpeed	Real	0.0

PLC_2 [CPU 1214C DC/DC/DC] / PLC data types / System data types

TO_Struct_DynamicDefaults

TO_Struct_DynamicDefaults Properties					
General					
Name	TO_Struct_DynamicDefaults	**Number**	1714	**Type**	UDT
Language		**Numbering**			
Information					
Title	DynamicDefaults structure of a technology object	**Author**		**Comment**	
Family		**Version**		**User-defined ID**	

Name	Data type	Default value
Acceleration	Real	48.0
Deceleration	Real	48.0
EmergencyDeceleration	Real	120.0
Jerk	Real	0.0

PLC_2 [CPU 1214C DC/DC/DC] / PLC data types / System data types

TO_Struct_PositionLimitsSW

TO_Struct_PositionLimitsSW Properties					
General					
Name	TO_Struct_PositionLimitsSW	**Number**	1715	**Type**	UDT
Language		**Numbering**			
Information					
Title	PositionLimitsSW structure of a technology object	**Author**		**Comment**	
Family		**Version**		**User-defined ID**	

Name	Data type	Default value
Active	Bool	false
MinPosition	Real	-10000.0
MaxPosition	Real	10000.0

PLC_2 [CPU 1214C DC/DC/DC] / PLC data types / System data types

TO_Struct_ControlPanel

TO_Struct_ControlPanel Properties					
General					
Name	TO_Struct_ControlPanel	**Number**	1729	**Type**	UDT
Language		**Numbering**			
Information					
Title	ControlPanel structure of a technology object	**Author**		**Comment**	
Family		**Version**		**User-defined ID**	

Name	Data type	Default value
Input	TO_Struct_ControlPanelInput	
Output	TO_Struct_ControlPanelOutput	

PLC_2 [CPU 1214C DC/DC/DC] / PLC data types / System data types

TO_Struct_ControlPanelInput

TO_Struct_ControlPanelInput Properties					
General					
Name	TO_Struct_ControlPanelInput	**Number**	1730	**Type**	UDT
Language		**Numbering**			
Information					
Title	ControlPanelInput structure of a technology object	**Author**		**Comment**	
Family		**Version**		**User-defined ID**	

Name	Data type	Default value
TimeOut	DInt	L#3000
EsLifeSign	DInt	0
Command	Array[1..1] of TO_Struct_ControlPanelInputCmd	

PLC_2 [CPU 1214C DC/DC/DC] / PLC data types / System data types

TO_Struct_ControlPanelInputCmd

TO_Struct_ControlPanelInputCmd Properties					
General					
Name	TO_Struct_ControlPanelInputCmd	**Number**	1731	**Type**	UDT
Language		**Numbering**			
Information					
Title	ControlPanelInputCommand structure of a technology object	**Author**		**Comment**	
Family		**Version**		**User-defined ID**	

Name	Data type	Default value
ReqCounter	DInt	0
Type	DInt	0
Position	Real	0.0
Velocity	Real	0.0
Acceleration	Real	0.0
Jerk	Real	0.0
Param	DInt	0

PLC_2 [CPU 1214C DC/DC/DC] / PLC data types / System data types

TO_Struct_ControlPanelOutput

TO_Struct_ControlPanelOutput Properties					
General					
Name	TO_Struct_ControlPanelOutput	**Number**	1732	**Type**	UDT
Language		**Numbering**			
Information					
Title	ControlPanelOutput structure of a technology object	**Author**		**Comment**	
Family		**Version**		**User-defined ID**	

Name	Data type	Default value
RTLifeSign	DInt	0
Command	Array[1..1] of TO_Struct_ControlPanelOutputCmd	

PLC_2 [CPU 1214C DC/DC/DC] / PLC data types / System data types

TO_Struct_ControlPanelOutputCmd

TO_Struct_ControlPanelOutputCmd Properties					
General					
Name	TO_Struct_ControlPanelOutputCmd	**Number**	1733	**Type**	UDT
Language		**Numbering**			
Information					
Title	ControlPanelOutputCommand structure of a technology object	**Author**		**Comment**	
Family		**Version**		**User-defined ID**	

Name	Data type	Default value
AckCounter	DInt	0
ErrorID	Word	16#0
ErrorInfo	Word	16#0
Done	Bool	false
Aborted	Bool	false

PLC_2 [CPU 1214C DC/DC/DC] / PLC data types / System data types

TO_Struct_Internal

TO_Struct_Internal Properties					
General					
Name	TO_Struct_Internal	**Number**	1734	**Type**	UDT
Language		**Numbering**			
Information					
Title	Internal structure of a technology object	**Author**		**Comment**	
Family		**Version**		**User-defined ID**	

Name	Data type	Default value
Id	Int	0
Value	Real	0.0

PLC_2 [CPU 1214C DC/DC/DC] / PLC data types / System data types

TO_Struct_Header

TO_Struct_Header Properties					
General					
Name	TO_Struct_Header	**Number**	1100	**Type**	UDT
Language		**Numbering**			
Information					
Title	Header struct of an TO	**Author**		**Comment**	
Family		**Version**		**User-defined ID**	

Name	Data type	Default value
VersionMaj	Int	0
VersionMin	Int	0
Reserved0	Int	0
Reserved1	Int	0
Reserved2	Int	0

PLC_2 [CPU 1214C DC/DC/DC] / PLC data types / System data types

TO_Struct_Actor

TO_Struct_Actor Properties					
General					
Name	TO_Struct_Actor	**Number**	1700	**Type**	UDT
Language		**Numbering**			
Information					
Title	Actor structure of a technology object	**Author**		**Comment**	
Family		**Version**		**User-defined ID**	

Name	Data type	Default value
Type	DInt	2
InverseDirection	Bool	false
DirectionMode	Int	0
Interface	TO_Struct_ActorInterface	
DriveParameter	TO_Struct_ActorDriveParameter	

PLC_2 [CPU 1214C DC/DC/DC] / PLC data types / System data types

TO_Struct_ActorInterface

TO_Struct_ActorInterface Properties					
General					
Name	TO_Struct_ActorInterface	**Number**	1701	**Type**	UDT
Language		**Numbering**			
Information					
Title	ActorInterface structure of a technology object	**Author**		**Comment**	
Family		**Version**		**User-defined ID**	

Name	Data type	Default value
EnableDriveOutput	VREF	
DriveReadyInput	VREF	
PTO	DWord	16#0

PLC_2 [CPU 1214C DC/DC/DC] / PLC data types / System data types

TO_Struct_ActorDriveParameter

TO_Struct_ActorDriveParameter Properties					
General					
Name	TO_Struct_ActorDrive-Parameter	**Number**	1702	**Type**	UDT
Language		**Numbering**			
Information					
Title	ActorDriveParameter structure of a technology object	**Author**		**Comment**	
Family		**Version**		**User-defined ID**	

Name	Data type	Default value
PulsesPerDriveRevolution	DInt	1000

PLC_2 [CPU 1214C DC/DC/DC] / PLC data types / System data types

TO_Struct_Sensor

TO_Struct_Sensor Properties					
General					
Name	TO_Struct_Sensor	**Number**	1703	**Type**	UDT
Language		**Numbering**			
Information					
Title	Sensor structure of a technology object	**Author**		**Comment**	
Family		**Version**		**User-defined ID**	

Name	Data type	Default value
ActiveHoming	TO_Struct_SensorActiveHoming	
PassiveHoming	TO_Struct_SensorPassiveHoming	

PLC_2 [CPU 1214C DC/DC/DC] / PLC data types / System data types

TO_Struct_SensorActiveHoming

TO_Struct_SensorActiveHoming Properties					
General					
Name	TO_Struct_SensorActive-Homing	**Number**	1706	**Type**	UDT
Language		**Numbering**			
Information					
Title	SensorActiveHoming structure of a technology object	**Author**		**Comment**	
Family		**Version**		**User-defined ID**	

Name	Data type	Default value
Mode	DInt	2
SideInput	Bool	false
DigitalInputAddress	VREF	
HomePositionOffset	Real	0.0
SwitchLevel	Bool	true

PLC_2 [CPU 1214C DC/DC/DC] / PLC data types / System data types

TO_Struct_SensorPassiveHoming

TO_Struct_SensorPassiveHoming Properties					
General					
Name	TO_Struct_SensorPassive-Homing	**Number**	1707	**Type**	UDT
Language		**Numbering**			
Information					
Title	SensorPassiveHoming structure of a technology object	**Author**		**Comment**	
Family		**Version**		**User-defined ID**	

Name	Data type	Default value
Mode	DInt	2
SideInput	Bool	false
DigitalInputAddress	VREF	
SwitchLevel	Bool	true

PLC_2 [CPU 1214C DC/DC/DC] / PLC data types / System data types

TO_Struct_Units

TO_Struct_Units Properties					
General					
Name	TO_Struct_Units	**Number**	1708	**Type**	UDT
Language		**Numbering**			
Information					
Title	Units structure of a technology object	**Author**		**Comment**	
Family		**Version**		**User-defined ID**	

Name	Data type	Default value
LengthUnit	Int	1013

PLC_2 [CPU 1214C DC/DC/DC] / PLC data types / System data types

TO_Struct_Mechanics

TO_Struct_Mechanics Properties					
General					
Name	TO_Struct_Mechanics	**Number**	1711	**Type**	UDT
Language		**Numbering**			
Information					
Title	Mechanics structure of a technology object	**Author**		**Comment**	
Family		**Version**		**User-defined ID**	

Name	Data type	Default value
LeadScrew	Real	10.0

PLC_2 [CPU 1214C DC/DC/DC] / PLC data types / System data types

TO_Struct_DynamicLimits

TO_Struct_DynamicLimits Properties					
General					
Name	TO_Struct_DynamicLimits	**Number**	1713	**Type**	UDT
Language		**Numbering**			
Information					
Title	DynamicLimits structure of a technology object	**Author**		**Comment**	
Family		**Version**		**User-defined ID**	

Name	Data type	Default value
MaxVelocity	Real	250.0
MinVelocity	Real	10.0

PLC_2 [CPU 1214C DC/DC/DC] / PLC data types / System data types

TO_Struct_PositionLimitsHW

TO_Struct_PositionLimitsHW Properties					
General					
Name	TO_Struct_PositionLimitsHW	**Number**	1716	**Type**	UDT
Language		**Numbering**			
Information					
Title	PositionLimitsHW structure of a technology object	**Author**		**Comment**	
Family		**Version**		**User-defined ID**	

Name	Data type	Default value
Active	Bool	false
MinSwitchLevel	Bool	false
MinSwitchAddress	VREF	
MaxSwitchLevel	Bool	false
MaxSwitchAddress	VREF	

PLC_2 [CPU 1214C DC/DC/DC] / PLC data types / System data types

TO_Struct_Homing

TO_Struct_Homing Properties					
General					
Name	TO_Struct_Homing	**Number**	1717	**Type**	UDT
Language		**Numbering**			
Information					
Title	Homing structure of a technology object	**Author**		**Comment**	
Family		**Version**		**User-defined ID**	

Name	Data type	Default value
AutoReversal	Bool	false
ApproachDirection	Bool	false
ApproachVelocity	Real	200.0
ReferencingVelocity	Real	40.0

PLC_2 [CPU 1214C DC/DC/DC] / PLC data types / System data types

TO_Struct_StatusPositioning

TO_Struct_StatusPositioning Properties					
General					
Name	TO_Struct_StatusPositioning	**Number**	1723	**Type**	UDT
Language		**Numbering**			
Information					
Title	StatusPositioning structure of a technology object	**Author**		**Comment**	
Family		**Version**		**User-defined ID**	

Name	Data type	Default value
Distance	Real	0.0
TargetPosition	Real	0.0

PLC_2 [CPU 1214C DC/DC/DC] / PLC data types / System data types

TO_Struct_StatusBits

TO_Struct_StatusBits Properties					
General					
Name	TO_Struct_StatusBits	**Number**	1726	**Type**	UDT
Language		**Numbering**			
Information					
Title	StatusBits structure of a technology object	**Author**		**Comment**	
Family		**Version**		**User-defined ID**	

Name	Data type	Default value
Activated	Bool	false
Enable	Bool	false
HomingDone	Bool	false
Done	Bool	false
Error	Bool	false
Standstill	Bool	false
PositioningCommand	Bool	false
VelocityCommand	Bool	false
HomingCommand	Bool	false
CommandTableActive	Bool	false
ConstantVelocity	Bool	false
Accelerating	Bool	false
Decelerating	Bool	false
ControlPanelActive	Bool	false
DriveReady	Bool	false
RestartRequired	Bool	false
SWLimitMinActive	Bool	false
SWLimitMaxActive	Bool	false
HWLimitMinActive	Bool	false
HWLimitMaxActive	Bool	false

PLC_2 [CPU 1214C DC/DC/DC] / PLC data types / System data types

TO_Struct_ErrorBits

TO_Struct_ErrorBits Properties					
General					
Name	TO_Struct_ErrorBits	**Number**	1727	**Type**	UDT
Language		**Numbering**			
Information					
Title	ErrorBits structure of a technology object	**Author**		**Comment**	
Family		**Version**		**User-defined ID**	

Name	Data type	Default value
SystemFault	Bool	false
ConfigFault	Bool	false
DriveFault	Bool	false
SWLimit	Bool	false
HWLimit	Bool	false
DirectionFault	Bool	false
HWUsed	Bool	false

PLC_2 [CPU 1214C DC/DC/DC] / Watch and force tables

Force table

Name	Address	Display format	Force value

PLC_2 [CPU 1214C DC/DC/DC] / Watch and force tables

Watch table_1

Name	Address	Display format	Modify value

PLC_2 [CPU 1214C DC/DC/DC]

Traces

Name

PLC_2 [CPU 1214C DC/DC/DC] / Traces

Measurements

This folder is empty.

PLC_2 [CPU 1214C DC/DC/DC] / Traces

Combined measurements

Name

PLC_2 [CPU 1214C DC/DC/DC] / OPC UA communication

Server interfaces

This folder is empty.

PLC_2 [CPU 1214C DC/DC/DC]

PLC alarm text lists

This folder is empty.

PLC_2 [CPU 1214C DC/DC/DC] / Local modules

PLC_2 [CPU 1214C DC/DC/DC]

PLC_2			
Project information			
Name	PLC_2	**Author**	SUS
Comment		**Slot**	1
Rack	0		
Catalog information			
Short designation	CPU 1214C DC/DC/DC	**Description**	Work memory 100 KB; 24VDC power supply with DI14 x 24VDC SINK/SOURCE, DQ10 x 24VDC and AI2 on board; 6 high-speed counters and 4 pulse outputs on-board; signal board expands on-board I/O; up to 3 communication modules for serial communication; up to 8 signal modules for I/O expansion; PROFINET IO controller, I-device, transport protocol TCP/IP, secure Open User Communication, S7 communication, Web server, OPC UA: Server DA
Article number	6ES7 214-1AG40-0XB0	**Firmware version**	V4.4
	False		

Connection resources

	Station resources - Reserved - Maximum	Station resources - Reserved - Configured	Station resources - Dynamic - Configured	Module resources - PLC_2 [CPU 1214C DC/DC/DC] - Configured
Maximum number of resources:		62	6	68
	Maximum	Configured	Configured	Configured
PG communication:	4	-	-	-
HMI communication:	12	0	0	0
S7 communication:	8	0	0	0
Open user communication:	8	0	0	0
Web communication:	30	-	-	-
Other communication:	-	-	0	0
Total resources used:		0	0	0
Available resources:		62	6	68

Overview of addresses\Overview of addresses\Overview of addresses			
Inputs	True	**Outputs**	True
Address gaps	False	**Slot**	True

Type	Addr. from	Addr. to	Module	PIP	Device name	Device number	Size	Master / IO system	Rack	Slot
I	0	1	DI 14/DQ 10_1	Automatic update	PLC_2 [CPU 1214C DC/DC/DC]	-	2 Bytes	-	0	1 1
O	0	1	DI 14/DQ 10_1	Automatic update	PLC_2 [CPU 1214C DC/DC/DC]	-	2 Bytes	-	0	1 1
I	64	67	AI 2_1	Automatic update	PLC_2 [CPU 1214C DC/DC/DC]	-	4 Bytes	-	0	1 2
I	1000	1003	HSC_1	Automatic update	PLC_2 [CPU 1214C DC/DC/DC]	-	4 Bytes	-	0	1 16
I	1004	1007	HSC_2	Automatic update	PLC_2 [CPU 1214C DC/DC/DC]	-	4 Bytes	-	0	1 17
I	1008	1011	HSC_3	Automatic update	PLC_2 [CPU 1214C DC/DC/DC]	-	4 Bytes	-	0	1 18
I	1012	1015	HSC_4	Automatic update	PLC_2 [CPU 1214C DC/DC/DC]	-	4 Bytes	-	0	1 19
I	1016	1019	HSC_5	Automatic update	PLC_2 [CPU 1214C DC/DC/DC]	-	4 Bytes	-	0	1 20
I	1020	1023	HSC_6	Automatic update	PLC_2 [CPU 1214C DC/DC/DC]	-	4 Bytes	-	0	1 21