DESIGN OF A CLOCK-DOMAIN MULTIPLEXER WITH DEADLOCK DETECTION AND RECOVERY CAPABILITY FOR FPGA SOC APPLICATIONS

Instructor: Dr. Le Van Thuan

Students: Vu Thi Phuong, Truong Hai Minh*

ABSTRACT

Reliable switching between asynchronous clock sources in SoC and FPGA systems remains challenging due to glitches, metastability, and unsafe failover when a clock source fails. This paper presents a glitch-free clock multiplexer featuring integrated activity sensing and permission-driven selection logic. The design employs cross-domain edge detection and counters to detect a failed clock, enabling fast symmetric failover to the live clock while forcing the dead path to disable. In the rare case of simultaneous failure of both clocks before detection completes, the output safely holds its last valid state. FPGA implementation on Intel Cyclone V demonstrates only 12 ALMs resource usage and a maximum operating frequency of 496.52 MHz.

PROBLEMS AND MOTIVATIONS

A. Traditional Clock Multiplexer

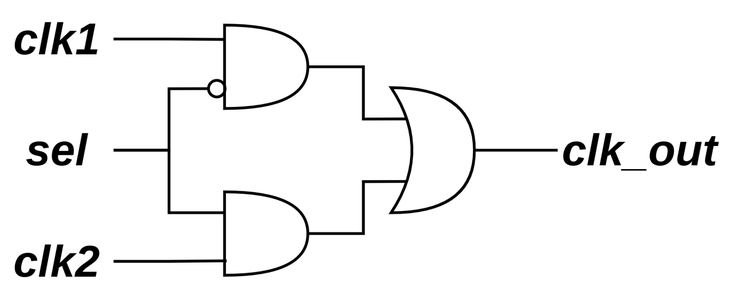

Fig.1. Traditional Clock Multiplexer

B. Glitch in Traditional Clock Multiplexer (Waveform)

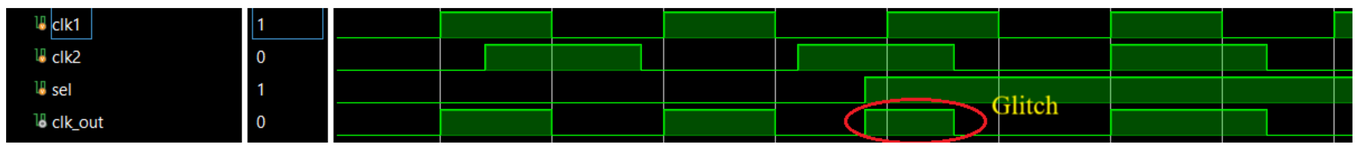

Fig. 2. When the select signal (sel) changes to switch from one clock to the other while both clocks are active, an unwanted short pulse called a glitch appears on clk_out.

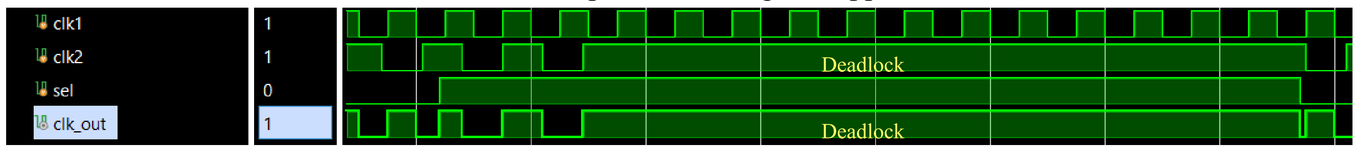

Fig. 3. Deadlock occurs when the selected clock stops toggling or become stuck at a constant logic level.

PROPOSED DESIGN

A. Block Diagram of The Proposed Clock Multiplexer

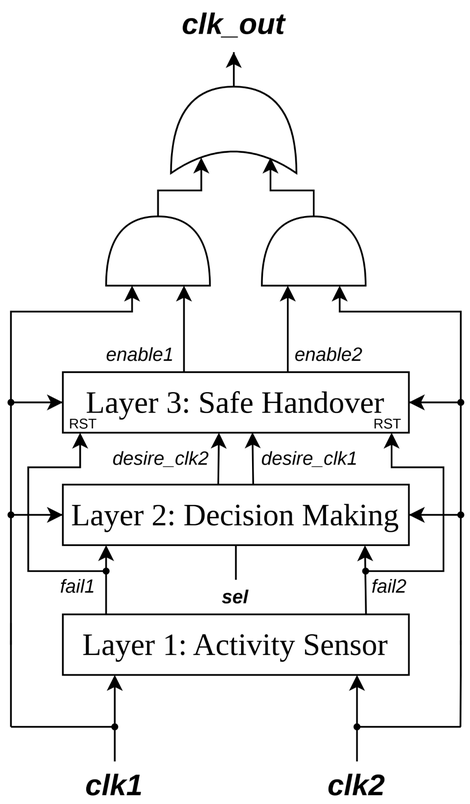

Fig. 4. consists of three functional layers. Layer 1 (Activity Sensor) continuously monitors the health of both input clocks through cross-domain sampling and generates real-time fail signals when a clock stops active [1]. These signals are fed to Layer 2 (Decision Making), which combines them with the external select signal to dynamically determine the desired clock. Finally, Layer 3 (Safe Handover) converts the desired signals into synchronized enable signals, ensuring glitch-free switching and mutual exclusion between the two clock paths [3].

B. Schematic of The Proposed Clock Multiplexer

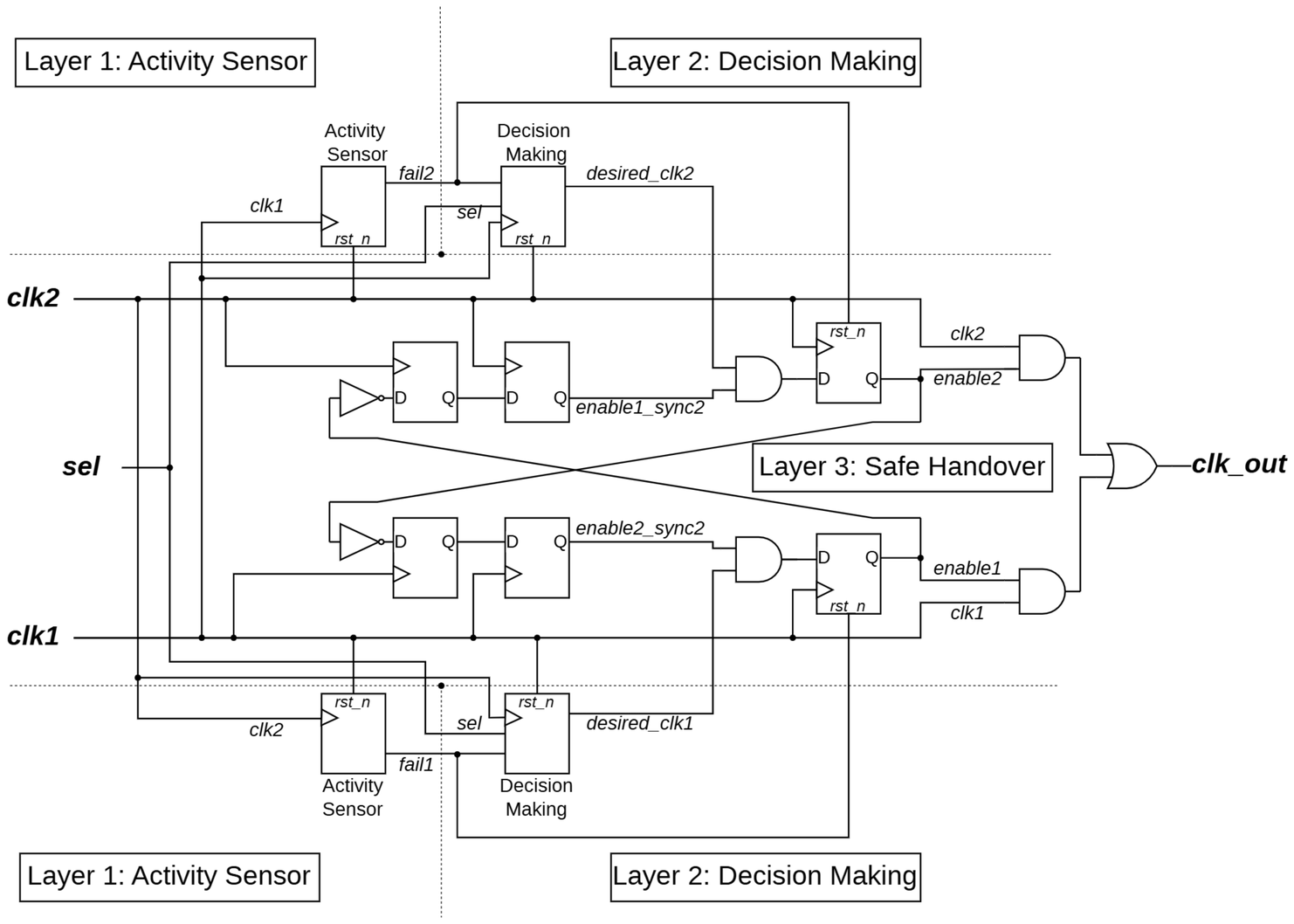

Fig. 5. Detailed Schematic of the proposed clock multiplexer

RESULTS AND EVALUATION

A. Functional Verification

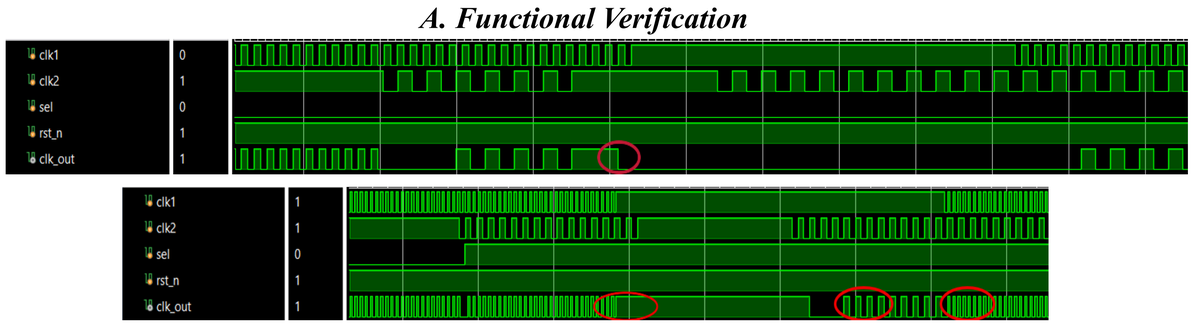

Fig. 6. Simulation Result under Failover (top) and Recovery scenarios (down)

B. Resource and Performance Analysis

Table I: Feature and Implementation Comparison for Various Clock Multiplexer Designs

Design	Glitch-Free	Ref. Clock	Deadlock-Free	Dual-Stop Safety	Latency Bound	ALMs	LABs	ALUTs	DLRs	Max. Freq. (MHz)
Break-before-make [2], [3]	Yes	No	No	No	Constant	3	2	4	6	580.05
Timer-based [1]	Yes	No	Yes	No	Freq.-dep.	12	4	5	10	367.92
Clock-ref-based [4]	Yes	Yes	Yes	Yes	Constant	27	4	51	41	352.61
Proposed GFCM	**Yes**	**No**	**Yes**	**Partial***	**Constant**	**14**	**3**	**24**	**22**	**515.46**

* The proposed GFCM provides full dual-stop safety (forces $clock_out$to logic low) for staggered failures via the $fail$ signal. In the rare simultaneous failure case (both clocks stop within the same detection window), no $fail$ signal is asserted and clk_out safely holds its last valid state until at least one clock recovers.

CONCLUSION

This work successfully implemented and verified an advanced, glitch-free clock multiplexer featuring integrated activity sensing and symmetric failover logic. By employing a layered architecture of cross-domain sampling and permission-driven selection, the design eliminates system deadlock during clock failure and ensures safe recovery to the primary source without manual intervention. Experimental benchmarks demonstrate that the proposed GFCM achieves a high operating frequency of 515.46 MHz while maintaining a minimal resource footprint of only 14 ALMs. This balance of high-speed performance and robust signal integrity makes the design an ideal solution for mission-critical, multi-clock SoC and FPGA applications where system uptime is paramount.

C. Academic Validation and Publication

Glitch-Free Clock Multiplexer with Active Decision Logic, Symmetric Failover and Safe Recovery for Multi-Clock SoC Systems

Hai Minh Truong†, Phuong Vu Thi†, Thuan Van Le†

†Faculty of Electrical and Electronic Engineering, Phenikaa School of Engineering, Phenikaa University

Fig. 7. This work has been written as a full scientific paper and submitted to the 2nd IEEE International Conference on Information, Implementation and Innovation in Technology 2026

REFERENCES

[1] S. Zeidler, O. Schrape, A. Breitenreiter, and M. Krsti´c, “A glitch-freeclock multiplexer for non-continuously running clocks,” in 2020 23rdEuromicro Conference on Digital System Design (DSD), 2020, pp. 11–15.

[2] R. Ginosar, “Fourteen ways to fool your synchronizer,” in Ninth In-ternational Symposium on Asynchronous Circuits and Systems, 2003.Proceedings., 2003, pp. 89–96.

[3] D. Harris and S. Harris, Digital Design and Computer Architecture.Morgan Kaufmann, 2012.

[4] T. V. Le and N. Van Dinh, “Glitch-free clock multiplexer usingreference-clock missing-pulse detection and safe-off recovery for SoCapplications,” in 2025 International Conference on Engineering andEmerging Technologies (ICEET), 2025, pp. 1–6.

Ha Noi, 16/04/2026