ELEVEN, TWELVE LONELY RUNNERS

TOUCH SUNGKAWICHAI AND TANUPAT TRAKULTHONGCHAI

Abstract. Wills stated the Lonely Runner Conjecture: if $k+1$ runners run with distinct and constant speeds around a unit circle from a common starting point, each runner is at least $1/(k+1)$ away from every other runner at some point in time. A computational method developed by Rosenfeld and the second author verified the conjecture for up to 10 runners. In this work, we provided computer-assisted proofs of the Lonely Runner Conjecture for 11 and 12 runners.

1. Introduction

The Lonely Runner Conjecture arose in the study of Diophantine approximation [15], though it has been interpreted in the context of view obstruction / Billiard trajectory [4], covering radius of zonotopes [6], and the chromatic number of a distance graph [16]. It was conjectured independently by Wills [15] in 1967 and Cusick[4] in 1984. In the most popular form, the conjecture asserts that if $k+1$ runners run with distinct, constant speeds around a unit circle, each of them will be *lonely* at some time. Here, a runner is said to be lonely if every other runner is at distance at least $\frac{1}{k+1}$ from them along the circle.

Conjecture 1.1. *Let $u_1, \ldots, u_{k+1}$ be distinct real numbers. There is a real number t such that*

$$\|tu_i - tu_j\| \geq \frac{1}{k+1} \quad \textit{for all } i \neq j.$$

The conjecture at each specific value of k is called the Lonely Runner Conjecture for $k+1$ runners.

Lonely Runner Conjecture is currently known to hold for the cases of up to 10 runners. The two smallest cases for k are trivial. Betke and Wills [2] gave the proof for $k=3$ (the 4 runners case), and Cusick and Pomerance [4] verified the conjecture for $k=4$ (the 5 runners case). In the same paper that proved the case $k=5$, Bohman, Holzman, and Kleitman [3] showed that it suffices to consider integer speeds, transforming the problem from a continuous one to a discrete one. This reduction, combined with fixing the speed of the slowest runner to be 0, produces the following equivalent statement to Conjecture 1.1.

Conjecture 1.2. *Any $\mathbf{u} \in \mathbb{Z}^k_{>0}$ has the* LR property*, that is, there is a real number t such that*

$$\|tu_i\| \geq \frac{1}{k+1} \quad \textit{for all } i = 1, \ldots, k+1.$$

We denote this statement by $LRC(k)$.

To match with the conjecture's settings, we refer to the vector $\mathbf{u} = (u_1, \ldots, u_k)$ as a *speed set* as it refers to the speed of the k runners whose speed is nonzero.

Before 2025, the conjecture was known to be true for $k \leq 6$, where the final case was proven by Barajas and Serra [1] in 2008. In September 2025, Rosenfeld [9] introduced a computational method that settled $k=7$ (and later $k=8$ [10]). In doing so, he relies on the finite-checking result of Malikiosis, Santos, and Schymura [7], which follows from similar results of Tao [12] and Giri and Kravitz [5]. The second author [13] subsequently refined this method to prove the conjecture for $k = 8, 9$ in November 2025.

In this paper, we further develop this computational method to verify the Lonely Runner Conjecture for $k = 10$ and 11. Our overall strategy is outlined in the next section where we

Date: March 22, 2026.
2020 *Mathematics Subject Classification.* 11K60.

provide more context of the computational method of [9] and [13]. Section 3, 4 and 5 explain the techniques that help simplify the verification. Section 6 summarizes the algorithm implemented, the results of which are presented in Section 7. Lastly, we discuss in Section 8 how this method may be further extended.

The article adopts following choices for notation: $\mathbb{Z}_n$ denotes the additive group modulo n, $\mathbb{Z}_n^\times$ is the multiplicative group modulo n, and $\mathbb{Z}_{n,l} := Intln - \{n, 2n, \ldots, ln\}$ as a subset of $\mathbb{Z}_{ln}$, hence in particular $\mathbb{Z}_{n,1} = \mathbb{Z}_n^\times$ as set. Moreover, let $\pi_{m\to n} : \mathbb{Z}_m \to \mathbb{Z}_n$ denote the natural projection map when $n \mid m$ and $\pi_n : \mathbb{Z} \to \mathbb{Z}_n$ denote the projection modulo n. All scalar functions are also extended component-wise when applied with any vectors. For an operation f on a set S We may also write fS to mean $\{f(s) : s \in S\}$.

2. Overview

We follow the computational framework laid by Rosenfeld [9] and adopt some terminologies[1] and techniques from [13].

Firstly, Rosenfeld reinterpreted the current best finite-checking result obtained by Malikiosis, Santos, and Schymura [7]:

Lemma 2.1 (Corollary 3, [9])**.** *If $LRC(k-1)$ holds, then any counterexample $\mathbf{u}$ to $LRC(k)$ must have*

$$u_1 \cdots u_k < B_k \quad \textit{where} \quad B_k := \left(\frac{\binom{k+1}{2}^{k-1}}{k} \right)^k .$$

Hence, in order to verify $LRC(k)$, it suffices to check all positive integral speed sets such that $u_1 \cdots u_k < B_k$. Rosenfeld then attacked this bound by generating multiple small proofs, each one asserts, for a particular prime p, that if $\mathbf{u}$ is a counterexample, then p divides $u_1 \cdots u_k$. These small proofs are obtained computationally with the help of the following Lemma 2.3.

Definition 2.2 (Definition 3.1, [13])**.** Let p be a prime and k, l be positive integers. A speed set $\mathbf{v} \in \mathbb{Z}_{p,l}^k$ is (k, p, l)-*improper* if both conditions hold:

- for any $t \in \mathbb{Z}_{lp}$ there exists i such that $\| \frac{tv_i}{lp} \| < \frac{1}{k+1}$.
- for all i, $\gcd(lp, v_1, \ldots, \widehat{v_i}, \ldots, v_k) = 1$.

If $\mathbf{v}$ is not improper, it is *proper*. Moreover, let $I(k, p, l)$ denotes the set of all improper speed sets.

One of the Rosenfeld's [9] key insights is restricting time t to be a rational number with denominator lp. By doing so, the time solution t to a speed set $\mathbf{v} \in \mathbb{Z}_{lp}^k$ is applicable to all speed set $\mathbf{u}$ in the preimage $\pi_{lp}^{-1}(\mathbf{v})$.

Lemma 2.3 (Lemma 3.3, [13])**.** *For $k \geq 3$, if $LRC(k-1)$ holds and $I(k, p, l)$ is empty for some l, then any counterexample $\mathbf{u}$ to $LRC(k)$ satisfies $p \mid u_1 \cdots u_k$.*

Thus, by accumulating proofs of emptiness of $I(k, p, l)$ over a set of primes P, we obtain that $\prod_{p\in P} p$ divides $v_1 \cdots v_k$. Therefore, if $\prod_{p\in P} p > B_k$, then there cannot be any counterexample to $LRC(k)$.

The main advance of [13] is the observation that allows $I(k, p, cl)$ to be computed efficiently as restated [2] in Lemma 2.4.

Lemma 2.4 (Lemma 3.5, [13])**.** *For any k, p, l, c, the inclusion*

$$(\pi_{clp\to lp}) I(k, p, cl) \subseteq I(k, p, l)$$

holds.

[1]Compared to [13], the two main differences are replacing $I(k, l, p)$ with $I(k, p, l)$.

[2]Notice that shadow in [13] is the preimage of the corresponding projection map

The following lemma enables the *lifting* process of $I(k,p,l)$ to $I(k,p,cl)$ which is more fine-grained. This lifting is done in hope that the extra structure of $\mathbb{Z}_{clp}$ will help filtering out speed sets that cannot be a counterexample to the conjecture. Lemma 2.4 motivates the definition of an *eventually proper* speed set, which is the main subject of interest in our paper.

Definition 2.5. $\mathbf{v} \in \mathbb{Z}_{p,1}^k$ is said to be *eventually* (k,p)*-proper* if there is l such that

$$\mathbf{v} \notin (\pi_{lp\to p})I(k,p,l)$$

The concept of eventual properness simplifies our discussion and implementation; while many speed sets in $\mathbb{Z}_{p,1}^k$ are not proper, it is enough that they are all eventually proper.

Lemma 2.6. *Let $k \geq 3$ and assume that $LRC(k-1)$ is true. If every $\mathbf{v} \in \mathbb{Z}_{p,1}^k$ is eventually (k,p)-proper, then any counterexample $\mathbf{u}$ to $LRC(k)$ has $p \mid u_1 \cdots u_k$.*

Proof. Since every $\mathbf{v}$ is eventually proper, it is possible to choose $l_{\mathbf{v}}$ to be an integer such that

$$\mathbf{v} \notin (\pi_{l_{\mathbf{v}}p\to p})I(k,p,l_{\mathbf{v}})$$

From there, pick l to be the least common multiple of all the $l_{\mathbf{v}}$'s. By Lemma 2.4,

$$(\pi_{l_{\mathbf{v}}p\to p})(\pi_{lp\to l_{\mathbf{v}}p})I(k,p,lp) \subseteq (\pi_{l_{\mathbf{v}}p\to p})I(k,p,l_{\mathbf{v}}p)$$

Hence as $\mathbf{v}$ is not in the right hand side, it follows that, $\mathbf{v} \notin \pi_{lp\to p}I(k,p,lp)$. As this applies to all $\mathbf{v}$, it must follow that $I(k,p,lp)$ is empty, thus Lemma 2.3 yields the needed conclusion. □

3. Quotient modulo prime

The framework introduced in [13] has a bottleneck in the first phase of computation, namely, the calculation of $I(k,p,1)$. In this section, we aim to exploit the $\mathbb{Z}_p^\times$ symmetry of $I(k,p,l)$ to reduce the amount of computation needed for $I(k,p,1)$ and its subsequent lifts by a factor of $p-1$. Note that this reduces the computational complexity of checking $I(k,p,1)$ from $\Theta(p^k)$ to $\Theta(p^{k-1})$.

For a fixed p, consider the relation $\sim$ in $\mathbb{Z}_{p,l}^k$ defined as

$$\mathbf{u} \sim \mathbf{v} \iff \mathbf{u} = a\mathbf{v} \quad \text{for some } a \in \mathbb{Z}_p^\times.$$

It is easy to see that $\sim$ is an equivalence relation, but more importantly, this relation also preserves properness.

Lemma 3.1. *Let $p, l \geq 1$ and let $\mathbf{u}, \mathbf{v}$ be speed sets.*

(1) *If $\mathbf{u} \sim_{lp} \mathbf{v}$, then $\mathbf{u}$ is improper if and only if $\mathbf{v}$ is improper.*
(2) *If $\mathbf{u} \sim_p \mathbf{v}$, then $\mathbf{u}$ is eventually proper if and only if $\mathbf{v}$ is eventually proper.*

Proof. Let $\mathbf{u} = a\mathbf{v}$ with $a \in \mathbb{Z}_p^\times$.

(1) As a is a unit, $a^{-1}\mathbf{u} = \mathbf{v}$ so by symmetry, it suffices to show that improperness of $\mathbf{v}$ implies improperness of $\mathbf{u}$. Since $\gcd(a,p) = 1$, it follows that

$$\gcd(lp, u_1, \ldots, \widehat{u_i}, \ldots, u_k) = \gcd(lp, av_1, \ldots, \widehat{av_i}, \ldots, v_k) = \gcd(lp, v_1, \ldots, \widehat{v_i}, \ldots, v_k) = 1,$$

thus the gcd condition of definition 2.2 is preserved. Moreover, for any $t \in \mathbb{Z}_{lp}$,

$$\left\| \frac{tu_i}{p} \right\| = \left\| \frac{t(av_i)}{p} \right\| = \left\| \frac{(at)v_i}{p} \right\|,$$

and since $at \in \mathbb{Z}_{lp}$, the distance condition holds for $\mathbf{u}$ if and only if it holds for $\mathbf{v}$. Thus $\mathbf{u}$ is improper if and only if $\mathbf{v}$ is improper.

(2) Again, by symmetry, it suffices to show that $\mathbf{u}$ is eventually proper assuming $\mathbf{v}$ is. For simplicity, let $\pi := \pi_{lp\to p}$. As $\mathbf{v}$ is eventually proper, there exists l such that $\mathbf{v} \notin \pi I(k,p,l)$. In other words, $\pi^{-1}(\mathbf{v}) \cap I(k,p,l) = \emptyset$. Since the restriction $\pi^{-1} : \mathbb{Z}_{lp}^\times \to \mathbb{Z}_p^\times$ is surjective by the Chinese Remainder Theorem, we may choose $b \in \mathbb{Z}_{lp}^\times$ with $\pi(b) = a^{-1}$.

For any $\mathbf{u}' \in \pi^{-1}(\mathbf{u})$ we let $\mathbf{v}' = b\mathbf{u}'$. Then,

$$\pi(\mathbf{v}') = \pi(b)\pi(\mathbf{u}') = a^{-1}\mathbf{u} = \mathbf{v},$$

so $\mathbf{v}' \in \pi^{-1}(\mathbf{v})$ and hence $\mathbf{v}' \notin I(k,p,l)$, so it is proper. By part (1), since $\mathbf{v}' \sim \mathbf{u}'$, $\mathbf{u}'$ is also proper. Thus $\pi^{-1}(\mathbf{u})$ contains no improper speed set, which ensures that $\mathbf{u}$ is eventually proper.

□

Lemma 3.1 implies that it is enough to concern only a single representative speed set in each equivalence class of $\sim$ when checking for the eventual properness. One easy way to pick a representative from each class in $\mathbb{Z}_{p,1}^k$ is to keep the first coordinate fixed to 1, which is what we chose for the implementation.

4. Intermediate sieves

In this section, we denote by $I'(k,p,l)$ and the quotient of $I(k,p,l)$ by $\sim$.

4.1. **Efficient Lifting.** One idea put forward by the second author in [13] was the insertion of an additional sieve. Observe that the cost of lifting $I'(k,p,l)$ to $I'(k,p,cl)$ is proportional to

$$|I'(k,p,l)| \cdot c^k$$

since each improper set modulo lp has c^k candidates (preimage modulo clp) that need verification. When k is large, the value of c has greater impact on computation time. For example, for $k = 11$, the $c = 3$ lifts are almost 90 times more expensive than those with $c = 2$.

As previously discussed, it is impossible to avoid lifting to a multiple of $k+1$; we have to go through all prime divisors of $k+1$ at least once. Nevertheless, it is essential to carefully choose the order of each lift. Since the $c = 2$ lifts are cheap, performing them multiple times can help if they reduce the size of the search space, i.e., if $|I'(k,p,2l)| < |I'(k,p,l)|$. Thus, employing a number of unneccessary cheap lifts before performing the more expensive and mandatory lifts, for example adding $c = 2$ lifts before $c = 3$ lifts, or adding $c = 3$ lifts before $c = 5$ lifts can shorten the overall computation time by reducing the amount of computation needed in larger modulus.

To put numbers to this observation, two example runs were conducted to illustrate this point. The first runs compare the proof for $k = 8$. We define Scheme A as the method used in [13] and Scheme B to exploit the aforementioned lifting strategy. To be specific, we use lifting diagrams to define the two schemes.

A lifting diagram always starts with $S_1 = I'(k,p,1)$. A horizontal arrow pointing from S_l towards S_{cl} indicates a lift by multiplier c. Vertical arrows indicate set operations. The process is always performed from top to bottom, and left to right. In this notation, Scheme A is just

$$S_1 \longrightarrow S_2 \longrightarrow S_4$$

and Scheme B is as follows:

$$\begin{tikzcd}
S_1 \arrow[r] \arrow[dr, bend right] & S_2 \arrow[r] \arrow[d, "\min"] & S_4 \arrow[dl, bend left] \\
& T_1 \arrow[r] & T_3 \arrow[r] & T_9
\end{tikzcd}$$

where the operation min takes the smallest set among those joined by the arrow. To be more verbose, in this diagram, $S_l = I'(8,p,l)$ and $T_l = I'(8,p,lh)$ for some $h \in \{1,2,4\}$ depending on which S_h is the smallest in certain case.

Using the same machine, Scheme A verifies the conjecture for $k = 8$ in 18 seconds, while Scheme B takes 12 seconds.

The difference is more pronounced for $k = 9$ where Scheme A is defined to be

$$S_1 \longrightarrow S_2 \longrightarrow S_{10}$$

and Scheme B is defined as

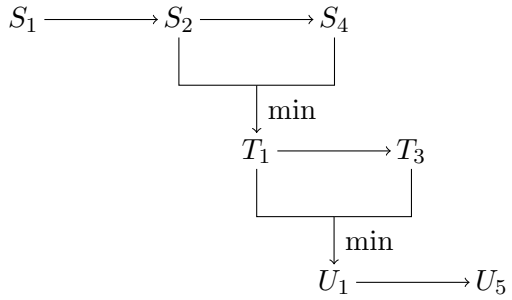

In this case, it takes under 5 seconds to run Scheme B for a specidic $p = 53$ while Scheme A does not finish in 15 minutes.

4.2. **Backward projection.** Just as lifting can reduce the size of the search space, projection can achieve a similar effect. After computing $I'(k, p, l)$, projecting the speed sets back into $\mathbb{Z}_p$ via the natural map $\pi_{pl\to p}$ can collapses several improper speed sets from $I'(k, p, l)$ into single representatives by maintaining only the structure in $\mathbb{Z}_p$, discarding all other structures of $\mathbb{Z}_{lp}$. This action loses fine-grained detail of each improper speed set, but reduces the number of improper speed sets that need calculation. Notice that $|\pi_{pl\to p}S| \leq |S|$. The action of projecting a set down to $\mathbb{Z}_p$ will be denoted as $\pi_{\to p}$ in the lifting diagram.

This operation is legal because if a speed set $\mathbf{v}$ is not in the projected $\pi_{lp\to p}I'(k, p, l)$, then by Definition 2.5 and Lemma 3.1, it follows that $\mathbf{v}$ is eventually proper. This fact implies that taking projection of a search space at any point will not skip over any speed sets.

5. Eventual properness of $(\pm 1, \pm 2, \ldots, \pm k)$

The high computational cost of lifting in the case $k = 10$ motivates this section. Although the exposition is tailored to $k = 10$, the arguments apply more generally to any k for which $k+1$ is prime. With additional care in tracking divisibility conditions, most of the results can be extended to the case where $k+1$ is not prime; however, the resulting conclusions are necessarily weaker.

We had observed that after lifting $I'(10, 1, p)$ with $c = 2, 3$ for a few times and consider the projection, the only speed sets in $I'(10, 1, p)$ that cannot be shown to be eventually proper are of the form

$$(\pm 1, \pm 2, \ldots, \pm 10).$$

It is unsurprising that these speed sets remain as they are lonely only at time $t = \frac{s}{11}$ for some $s \in \mathbb{Z}$ where $11 \nmid s$; what is perhaps surprising is that no other speed sets survive the pruning. As mentioned, confirming that these speed sets are eventually proper requires a $c = 11$ lift, which is relatively computationally expensive. However, it is possible to exploit another structure of these speed sets to do so more efficiently.

Here, we write $\{x\}$ for the fractional part of $x \in \mathbb{R}$.

We recall the following folklore result

Lemma 5.1 (folklore)**.** *Suppose that $LRC(n)$ holds for all $n < k$. Let p be a prime that divides m speeds in $\mathbf{v}$, where $\lceil \frac{2p}{k+1} \rceil < \frac{p}{k-m}$, and $\gcd(v_1, \ldots, v_k) = 1$. Then $\mathbf{v}$ has the LR property.*

Proof. As $\mathbf{v}$ is treated as a set, reordering of elements does not lose any generality, thus we can assume that $v_1, \ldots, v_m$ are divisible by p and $v_{m+1}, \ldots, v_k$ are not. Since $m < k$, $LRC(m)$ holds and there is a time $T \in \mathbb{R}$ when $\|Tv_i\| \geq \frac{1}{m+1}$ for all $i \leq m$.

By considering time of the form $t = T + \frac{r}{p}$ for $r \in \mathbb{Z}_p$, we have that

$$\|tv_i\| = \|Tv_i\| \geq \frac{1}{m+1} \quad \text{for all } i \leq m$$

as p divides v_i. For $i > m$, on the other hand,

$$\left\{ \left\{ \left(T + \frac{r}{p} \right) v_i \right\} : r \in \mathbb{Z}_p \right\} = \left\{ \left\{ Tv_i + \frac{r}{p} \right\} : r \in \mathbb{Z}_p \right\}$$

as multiplication by v_i permutes elements in $\mathbb{Z}_p$.

Clearly, the latter set is the set of p evenly spaced points on the unit circle, so at most $\lceil \frac{2}{k+1} \cdot p \rceil$ points can intersect with the interval $\left(-\frac{1}{k+1}, \frac{1}{k+1}\right)$. In other words, at most $\lceil \frac{2p}{k+1} \rceil$ points are not lonely for each $i = m+1, \ldots, k$.

Since there are $k-m$ such indices, at most $(k-m)\lceil \frac{2p}{k+1} \rceil$ choices of $r \in \mathbb{Z}_p$ are eliminated. Hence if $(k-m)\left\lceil \frac{2p}{k+1} \right\rceil < p$, then there must be a value of r that makes $\|tv_i\| \geq \frac{1}{k+1}$ for all $i \geq m+1$. □

Definition 5.2. Let $R_n(x) = \lfloor n\{x\} \rfloor$. Equivalently, $R_n(x)$ is the number k such that $\{x\} \in [k/n, (k+1)/n)$, that is $R_n(x)$ refers to the position on a unit cycle subdivided into n parts,

Let $\mathbf{v} \in \mathbb{Z}_{k+1}^k$ and $r \in \mathbb{Z}_p$. We write

$$\mathbf{r}(x) = (R_{k+1}(x),\ R_{k+1}(2x),\ \ldots,\ R_{k+1}(kx))$$

for $x \in \mathbb{R}$ and say that $\mathbf{v}$ is (k,p)-*resolvable* if any of the following holds:

- (scattered) $\mathbf{v}$ contains no zero component
- (divisible) $\mathbf{v}$ contains at least $\frac{k+1}{2}$ zero components
- (lonely) there is $s \in \mathbb{Z}_{k+1}$ and $r \in \mathbb{Z}_p$ for which
$$s\mathbf{v} + \mathbf{r}(r/p) \in \{1, \ldots, k-1\}^k$$
when considered modulo $k+1$.

Let $J(k,p)$ be the set of speed sets that are not (k,p)-resolvable.

If not formally, at least intuitively, this is just a reformulation of the previously defined shadow of $(1, 2, \ldots, k)$ according to its definition in [13], and we can replace $(1, 2, \ldots, k)$ with any speed set $\mathbf{w} \in \mathbb{Z}_p^k$ and change the definition of the remainder vector analogously to

$$\mathbf{r}(x) := (R_{k+1}(w_1 x), \ldots, R_{k+1}(w_k x)).$$

The advantage of this formulation is that, by isolating $\mathbf{r}$ first, we can *decouple* time points of the form $t = \frac{q}{(k+1)p}$ as partial fraction $t = \frac{s}{k+1} + \frac{r}{p}$. Consequently, all dependence on p has been eliminated except for that arising from $\mathbf{r}(\frac{1}{p}\mathbb{Z}_p)$ in the lonely condition. As will be mentioned in 5.5, even this dependence can be dropped when p is sufficiently large.

We first argue that absense of non-resolvable speed sets entails that the speed set of the form $(\pm 1, \pm 2, \ldots, \pm k)$ cannot be a counterexample.

Lemma 5.3. *Assume that $J(k,p) = \emptyset$ and $k+1$ is prime. Then $(\pm 1, \pm 2, \ldots, \pm k)$ is eventually (k,p)-proper.*

Proof. First, we claim that $\mathbf{v} = (1, 2, \ldots, k)$ is eventually proper. Let $\mathbf{u} \in \mathbb{Z}^k$ be a preimage of $\mathbf{v}$ by π_p. By considering time of the form $t = \frac{s}{k+1} + \frac{r}{p}$ for $s \in \mathbb{Z}_{k+1}$ and $r \in \mathbb{Z}_p$, the distance of the i-th runner from 0 is given by

$$\{tu_i\} = \left\{ \left(\frac{s}{k+1} + \frac{r}{p} \right) u_i \right\} = \left\{ \frac{su_i'}{k+1} + \frac{ri}{p} \right\}$$

where $\mathbf{u}' := (u_1', \ldots, u_k') = \pi_{k+1}\mathbf{u}$.

By assumption, $\mathbf{u}'$ is resolvable, thus one of the following case holds.

- $\mathbf{u}'$ is scattered. In this case, pick $r = 0$ and $s = 1$ and we have
$$\{tu_i\} = \left\{ \frac{u_i'}{k+1} \right\}$$
Since $u_i' \neq 0$, $\|tu_i\| \geq \frac{1}{k+1}$ for all i. Hence $\mathbf{u}$ has the LR property.
- $\mathbf{u}'$ is divisible. Assume that $\mathbf{u}'$ contains $m \geq \frac{k+1}{2}$ zero components. This precisely means that there are exactly m coordinate of $\mathbf{u}$ that are divisible by $k+1$. By Lemma 5.1 with $p = k+1$ and $m \geq \frac{k+1}{2}$ (note that the inequality
$$\left\lceil \frac{2p}{k+1} \right\rceil = 2 < \frac{2(k+1)}{k-1} \leq \frac{p}{k-m}$$

holds), $\mathbf{u}$ has the LR property.

- $\mathbf{u}'$ is lonely. If this is the case, there is a choice of r and s such that

$$s\mathbf{u}' + \mathbf{r}(r/p) \in \{1, \dots, k-1\}^k$$

when considered modulo $k+1$. This means that for each coordinate i, there are A_i and B_i such that $\{\frac{sv_i}{k+1}\} = \frac{A_i}{k+1}$ and $\{\frac{ri}{p}\} \in \left[\frac{B_i}{k+1}, \frac{B_i+1}{k+1}\right)$ where where $C_i := A_i + B_i$ is in $\{1, \dots, k-1\}$ when considered modulo $k+1$. Therefore,

$$\{tu_i\} = \left\{\frac{su_i'}{k+1} + \frac{ri}{p}\right\} \in \left[\frac{C_i}{k+1}, \frac{C_i+1}{k+1}\right)$$

and in particular the set on the right hand side does not intersect with $[0, \frac{1}{k+1}) \cup (\frac{k}{k+1}, 1)$. Since this holds for every i, $\mathbf{u}$ has the LR property.

As all $\mathbf{u}$ in the preimage of $\mathbf{v}$ has the LR property, $\mathbf{v}$ must be eventually proper.

Lastly, notice that for any $\mathbf{v} = (\pm 1, \pm 2, \dots, \pm k)$, the preimage $\mathbf{u} = (u_1, \dots, u_k)$ can be replaced by $(u_1, \dots, -u_i, \dots, u_k)$ at any coordinate i since $\|tu_i\| = \|t(-u_i)\|$, which completes the proof. □

Empirically, checking for emptiness of $J(k,p)$ is the most demanding step. We show here that running this step once is conclusive for all sufficiently large p.

Lemma 5.4. *If $\mathbf{r}(\frac{1}{q}\mathbb{Z}_q) \subseteq \mathbf{r}(\frac{1}{p}\mathbb{Z}_p)$ and $\mathbf{v}$ is (k,q)-resolvable, then it is also (k,p)-resolvable.*

Proof. As $\mathbf{v}$ is (k,q)-resolvable, there are three cases to consider. That is, $\mathbf{v}$ can be either scattered, divisible, or lonely. For the first two cases, it immediately follows that $\mathbf{v}$ is (k,p)-resolvable. If $\mathbf{v}$ is lonely, in particular, (k,q)-lonely. Then there is r and s such that

$$s\mathbf{u}' + \mathbf{r}(r/q) \in \{1, \dots, k-1\}^k$$

as $\mathbf{r}(\frac{1}{q}\mathbb{Z}_q) \subseteq \mathbf{r}(\frac{1}{p}\mathbb{Z}_p)$, we know that there is $r' \in \mathbb{Z}_q$ such that

$$\mathbf{r}\left(\frac{r'}{p}\right) = \mathbf{r}\left(\frac{r}{q}\right).$$

Hence, there is r' and s satisfying the loneliness property, concluding that $\mathbf{v}$ is (k,p)-lonely, and thus is (k,p)-resolvable. □

Corollary 5.5. *Suppose that $J(k,q) = \emptyset$ for some prime q. Then $(\pm 1, \pm 2, \dots, \pm k)$ is eventually (k,p)-proper for every $p \geq k(k^2-1)$.*

Proof. First, we claim that for every $p \geq k(k^2-1)$, it follows that $\mathbf{r}(\frac{1}{p}\mathbb{Z}_p) = \mathbf{r}([0,1])$.

As $\mathbf{r}$ outputs discrete vectors, there will be discontinuity points x such that $\mathbf{r}(x-\epsilon) \neq \mathbf{r}(x+\epsilon)$ for any small real ϵ. Notice that x is a point of discontinuity only if there is some $i \in \{1, \dots, k\}$ such that $R_{k+1}(ix) \in \mathbb{Z}$, that is $(k+1)ix = a$ for some integer a. Hence, x must have the form of $\frac{a}{i(k+1)}$.

If $x_1 = \frac{a_1}{i_1(k+1)}$ and $x_2 = \frac{a_2}{i_2(k+1)}$ are two distinct points of discontinuity where a_1, a_2, i_1, i_2 integers, we have

$$\begin{aligned} |x_1 - x_2| &= \left|\frac{a_1}{i_1(k+1)} - \frac{a_2}{i_2(k+1)}\right| = \frac{1}{k+1}\left|\frac{a_1}{i_1} - \frac{a_2}{i_2}\right| \\ &\geq \frac{1}{k+1} \cdot \frac{1}{k(k-1)} = \frac{1}{k(k^2-1)} \geq \frac{1}{p}. \end{aligned}$$

By the pigeonhole principle, Hence, $\mathbf{r}(\frac{1}{p}\mathbb{Z}_p) = \mathbf{r}([0,1])$.

Since $\frac{1}{q}\mathbb{Z}_q \subseteq [0,1]$, we have the inclusion

$$\mathbf{r}(\tfrac{1}{q}\mathbb{Z}_q) \subseteq \mathbf{r}([0,1]) = \mathbf{r}(\tfrac{1}{p}\mathbb{Z}_p).$$

By Lemma 5.4, $J(k,p)$ is empty if $J(k,q)$ is empty, and the statement follows directly from Lemma 5.3 □

6. Algorithms for verification

From Lemma 2.6 and 3.1, to show that $p \mid u_1 \cdots u_k$ for any counterexample $\mathbf{u}$ to $LRC(k)$, it suffices to check that every speed set in $\mathbb{Z}_{p,1}^k$ is eventually proper.

For $k = 11$, the algorithm has two main steps: computing $I'(k, p, 1)$ and lifting. We provide a description of the lifting step in the following lifting diagram.

$$\begin{tikzcd}
S_1 \arrow[r] & S_2 \arrow[r] & S_4 \arrow[r] \arrow[dd, bend right] & S_8 \arrow[r, dotted] \arrow[dd, "\min"] & S_{16} \arrow[dd, bend left] & \\
 & & & & & \\
 & & & T_1 \arrow[r] & T_3 \arrow[r] & T_9
\end{tikzcd}$$

The dotted arrow indicates that we early exit before computing $I'(11, p, 16)$ if the previous lift does not make progress, that is, if $|I'(11, p, 8)| < |I'(11, p, 4)|$. This is a quirk in the implementation that is not needed nor did it provide meaningful speedup. On that note, we did not have to compute T_9 for most prime because T_3 is already empty but we use this scheme so that it is applicable to all primes. The theoretical results did not limit us from using different scheme for different prime. In any case, if T_3 or T_9 is empty, we obtain that p divides the product $u_1 \cdots u_k$ of any counterexample.

The case $k = 10$ is more involved and can be thought of as having three phases: computing $I'(k, p, 1)$, lifting, and resolving. The goal of lifting here is not to show that the last set is completely empty but that there are 10 equivalence classes of speed sets remaining. With that information, it follows that the speed sets must be of the form $(\pm 1, \pm 2, \ldots, \pm 10)$ because we know that they cannot be resolved without a $c = 11$ lift. Thus, we can follow up in the resolving phase by checking that $J(k, p)$ is empty. In this case, the lifting phase can be described as follow:

$$\begin{tikzcd}
S_1 \arrow[r] & S_2 \arrow[r] & S_4 \arrow[r] & S_8 \arrow[d, "\pi_{\to p}"] & & \\
 & & & T_1 \arrow[r] & T_3 \arrow[r] & T_9 \arrow[d, "\pi_{\to p}"] \\
 & & & & & U_1
\end{tikzcd}$$

6.1. **Implementation details.** Rosenfeld wrote [8] to verify the conjecture for $k = 7$ and the second author developed [14] to verify the case of $k = 8, 9$. The latter code takes 15 minutes for $k = 8$ and approximately 23 hours for $k = 9$. The first author developed [11] to implement the algorithms in Section 6, with assistance from AI-based tools, to improve performance and scalability. In addition to the mathematical improvements described in Sections 3, 4 and 5, the practical aspect was also improved by refactoring the implementation to support parallel execution and introducing more memory-efficient data structures.

These refinements dramatically improve runtime. Compared to the second author's original implementation in [13], we proved $k = 8$ in 12 seconds and $k = 9$ in 181 seconds on a 10-core Apple M4 processor. The proofs of $k = 10$ and $k = 11$ were run in multiple batches, with multiple versions, and on multiple machines, thus making the exact time taken incomparable to other cases. The source of the computation, along with the log files, can be found in the first author's GitHub repository [11].

We note here that the third phase of computation for $k = 10$ can be replaced by just lifting normally with $c = 11$. In fact, we almost completed the proof of $k = 10$ without using Lemma 5.3. However, as lifting is especially expensive with large primes, the technique put forth by Lemma 5.3 drastically speeds up the proof.

7. Results

For the case $k = 10$, let

$$P_{10} := \left\{ \begin{array}{r} 103, 131, 137, 139, 149, 151, 157, 107, 109, 127, 163, 167, 173, \\ 179, 433, 191, 193, 197, 199, 211, 223, 227, 229, 233, 239, 241, \\ 251, 257, 263, 269, 271, 277, 281, 283, 293, 307, 311, 313, 317, \\ 331, 337, 347, 349, 353, 359, 367, 373, 379, 383, 389, 401, 409, \\ 419, 421, 431, 433, 439, 443, 449, 457, 461 \end{array} \right\}$$

and for the case $k = 11$, let

$$P_{11} := \left\{ \begin{array}{r} 23, 131, 137, 139, 149, 151, 157, 163, 167, 173, 179, 181, 191, \\ 193, 197, 199, 211, 223, 227, 229, 233, 239, 241, 251, 257, 263, \\ 269, 271, 277, 281, 283, 293, 307, 311, 313, 317, 331, 337, 347, \\ 349, 353, 359, 367, 373, 379, 383, 389, 397, 401, 409, 419, 421, \\ 431, 433, 439, 443, 449, 457, 461, 463, 467, 479, 487, 491, 499, \\ 503, 509, 521, 523, 541, 547, 557, 563, 569, 571, 577 \end{array} \right\}$$

Using the algorithms described in the previous section, we verified that for $k \in \{10, 11\}$ and $p \in P_k$, every $\mathbf{v} \in \mathbb{Z}^k_{p,1}$ is eventually (k, p)-proper.

Theorem 7.1. *The Lonely Runner Conjecture holds for $k = 10$ and $k = 11$.*

Proof. Recall that $LRC(k)$ holds for $k \leq 9$ [13]. By Lemma 2.6 and the above computer verification, any counterexample $\mathbf{u}$ to $LRC(10)$ must be divisible by

$$\prod_{p \in P_{10}} p > e^{339} > e^{337.7} > B_{10}$$

where B_{10} is the constant in Lemma 2.1. But by the same lemma this is impossible, so no such $\mathbf{u}$ exists and $LRC(10)$ holds.

Similarly, for $k = 11$, we also have

$$\prod_{p \in P_{11}} p > e^{435} > e^{434.5} > B_{11}$$

and $LRC(11)$ follows. □

8. Further work

It is feasible, via a natural extension of the algorithm for $k = 10$, to verify the conjecture for $k = 12$. The main bottleneck in the case $k = 12$ is verifying that $J(k, p)$ is empty which now takes 2 days for each p on a 14-core Apple M3 Max processor. The size of $\mathbb{Z}^k_{k+1}$ is $(k+1)^k$, and this constant when $k = 12$ is 10^3 times that when $k = 10$. Nonetheless, the case $k = 12$ should be practically verifiable given enough computing resources.

For $k = 13$, the main bottleneck will return back to the first phase of computation, but actually might even be "more possible" and the $k = 12$ variant.

References

1. J. Barajas and O. Serra, *The Lonely Runner with Seven Runners*, The Electronic Journal of Combinatorics **15** (2008), no. 1, R48 (en).
2. U. Betke and J. M. Wills, *Untere schranken fur zwei diophantische approximations-funktionen*, Monatshefte fur Mathematik **76** (1972), no. 3, 214–217.
3. Tom Bohman, Ron Holzman, and Dan Kleitman, *Six lonely runners*, The Electronic Journal of Combinatorics **8** (2001), no. 2, R3.
4. Thomas W Cusick and Carl Pomerance, *View-obstruction problems, III*, Journal of Number Theory **19** (1984), no. 2, 131–139.
5. Vikram Giri and Noah Kravitz, *The structure of Lonely Runner spectra*, Mathematical Proceedings of the Cambridge Philosophical Society **180** (2026), no. 2, 343–361 (en).

6. Matthias Henze and Romanos-Diogenes Malikiosis, *On the covering radius of lattice zonotopes and its relation to view-obstructions and the lonely runner conjecture*, Aequationes mathematicae **91** (2017), no. 2, 331–352 (en).
7. Romanos Diogenes Malikiosis, Francisco Santos, and Matthias Schymura, *Linearly exponential checking is enough for the lonely runner conjecture and some of its variants*, Forum of Mathematics, Sigma **13** (2025).
8. Matthieu Rosenfeld, *The lonely runner conjecture*, `https://gite.lirmm.fr/mrosenfeld/the-lonely-runner-conjecture`, 2025, Accessed 2026-03-14.
9. ———, *The lonely runner conjecture holds for eight runners*, arXiv preprint arXiv:2509.14111 (2025).
10. ———, *The lonely runner conjecture holds for nine runners*, December 2025, arXiv:2512.01912.
11. Touch Sungkawichai, *Twelve runners code*, `https://github.com/vzsky/twelve-lonely-runners`, 2026.
12. Terence Tao, *Some remarks on the lonely runner conjecture*, Contributions to Discrete Mathematics **13** (2018), no. 2.
13. Tanupat Trakulthongchai, *Nine and ten lonely runners*, arXiv preprint arXiv:2511.22427 (2025).
14. ———, *Nine and ten lonely runners code*, `https://github.com/t-tanupat/nine-and-ten-lonely-runners`, 2025, Accessed 2026-03-14.
15. Jörg M. Wills, *Zwei Sätze über inhomogene diophantische Approximation von I rrationalzehlen*, Monatshefte für Mathematik **71** (1967), no. 3, 263–269 (de).
16. Xuding Zhu, *Circular chromatic number of distance graphs with distance sets of cardinality 3*, Journal of Graph Theory **41** (2002), no. 3, 195–207.

London, UK
Email address: `touchsungkawichai@gmail.com`

St John's College, University of Oxford, Oxford, UK
Email address: `tanupat.trakulthongchai@sjc.ox.ac.uk`